REFERENCE ONLY

THE CITY OF BRENTWOOD

HERITAGE ▪ VISION ▪ OPPORTUNITY

CONTRACT DOCUMENTS
FOR

Wastewater Treatment Plant Chemical Storage Corrosion Control

CIP Project No. 592-59201

Bid Opening:

Tuesday, March 1, 2016 at 2:00 p.m.

Location of Bid Submittal: City Clerk
Brentwood City Hall
Third Floor
150 City Park Way
Brentwood, CA 94513

Approved by: Jagtar "Jack" Dhaliwal
Interim City Engineer

JDhaliwal
Signature

2/8/16
Date

CITY OF BRENTWOOD
CONTRA COSTA COUNTY
STATE OF CALIFORNIA

CONTRACT DOCUMENTS FOR THE
CONSTRUCTION OF

Wastewater Treatment Plant Chemical Storage Corrosion Control

CIP Project No. 592-59201

Prepared Under the Supervision of:

City of Brentwood
John Samuelson, P.E.
License # C67734
Expires 6/30/17

Stamp Seal	Signature	2/8/16 Date

Wastewater Treatment Plant Chemical Storage Corrosion Control
CIP Project No. 592-59201

TABLE OF CONTENTS

Part A – Bidder Informtion
Notice Inviting Bids....1
Instructions To Bidders....3
Bidder's Request For Information Form....8

Part B – Bid Proposal
Bid Proposal....9
Bid Schedule....11
Subcontractor List....12
Noncollusion Declaration....13
Bid Bond....14
Bidder's Questionnaire....16

Part C – Contracts and Bonds
Contract....18
Payment Bond....22
Performance Bond....24
Warranty Bond....26

Part D – General Conditions....28

Article 1 - Definitions....28
1.1 Definitions....28

Article 2 - Roles and Responsibilities....30
2.1 Design Professional....30
2.2 Contractor....31
2.3 Subcontractors....32
2.4 Coordination of Work....33
2.5 Submittals....33
2.6 Material Samples....34

Article 3 - Contract Documents....34
3.1 Interpretation of Contract Documents....34
3.2 Order of Precedence....35
3.3 Caltrans Standard Specifications....35
3.4 For Reference Only....36

Article 4 - Bonds, Indemnity, and Insurance....36
4.1 Payment and Performance Bonds....36
4.2 Indemnity and Liability....36
4.3 Insurance....37
4.4 Warranty Bond....39

Article 5 - Contract Time 39
5.1 Time is of the Essence. 39
5.2 Schedule Requirements. 39
5.3 Delay and Extensions of Contract Time. 41
5.4 Liquidated Damages. 42

Article 6 - Contract Modification 43
6.1 Changes in Work. 43
6.2 Contractor Change Order Requests. 44
6.3 Adjustments to Contract Price. 44
6.4 Unilateral Change Order. 45
6.5 Non-Compliance Deemed Waiver. 45

Article 7 - General Construction Provisions 45
7.1 Permits and Taxes. 45
7.2 Temporary Facilities. 45
7.3 Signs. 46
7.4 Protection of Work and Property. 46
7.5 Noninterference. 46
7.6 Materials and Equipment. 46
7.7 Substitutions 47
7.8 Testing and Inspection 48
7.9 Clean up 49
7.10 Instructions and Manuals. 49
7.11 As-built Drawings. 49
7.12 Existing Utilities. 50
7.13 Notice of Excavation. 50
7.14 Trenching and Excavations. 50
7.15 Trenching of Five Feet or More. 51
7.16 New Utility Connections. 51
7.17 Lines and Grades. 51
7.18 Historic or Archeological Items. 52
7.19 Environmental Control. 52
7.20 Photographic Documentation. 52

Article 8 - Payment 53
8.1 Schedule of Values. 53
8.2 Progress Payments. 53
8.3 Adjustment of Payment Application. 53
8.4 Acceptance of Work. 54
8.5 Retention. 54
8.6 Setoff. 55
8.7 Payment to Subcontractors and Suppliers. 55
8.8 Final Payment. 55
8.9 Release of Claims. 55
8.10 Warranty of Title. 55

Article 9 - Labor Provisions 55
9.1 Discrimination Prohibited. 55
9.2 Labor Code Requirements. 56
9.3 Prevailing Wages. 56
9.4 Payroll Records. 56
9.5 Labor Compliance. 57

Article 10 - Safety Provisions **57**
10.1 Safety Precautions and Programs. 57
10.2 Hazardous Materials. 58
10.3 Material Safety. 58

Article 11 - Completion and Warranty Provisions **58**
11.1 Final Completion. 58
11.2 Warranty. 59
11.3 Use Prior to Final Completion. 60
11.4 Substantial Completion. 60

Article 12 - Dispute Resolution **60**
12.1 Claims. 60
12.2 Claims Submission. 61
12.3 Claims Under $50,000. 62
12.4 Claims From $50,000 to $375,000. 62
12.5 Claims Over $375,000. 62
12.6 Meet and Confer. 63
12.7 Mediation and Government Code Claims. 64
12.8 Tort Claims. 64
12.9 Arbitration. 64
12.10 Damages. 64
12.11 Multiple Claims. 64
12.12 Other Disputes. 65

Article 13 - Suspension and Termination **65**
13.1 Suspension for Cause. 65
13.2 Suspension for Convenience. 65
13.3 Termination for Default. 65
13.4 Termination for Convenience. 66
13.5 Provisions Remaining in Effect. 66

Article 14 - Miscellaneous Provisions **66**
14.1 Assignment of Unfair Business Practice Claims. 66
14.2 Provisions Deemed Inserted. 67
14.3 Waiver. 67
14.4 Titles, Headings, and Groupings. 67
14.5 Statutory and Regulatory References. 67

Part E –Special Conditions **68**

Part F –Federal Requirements **69**

Part G –Technical Specifications **70**

Appendix “A” and Appendix “B” **78**

NOTICE INVITING BIDS

1. Bid Acceptance. The City of Brentwood ("City"), will accept sealed bids for its Wastewater Treatment Plant Chemical Storage Corrosion Control, CIP Project No. 592-59201 ("Project"), by or before Tuesday, March 1, 2016, at 2:00 p.m., at its City Clerk's office, located at Brentwood City Hall, Third Floor, 150 City Park Way, Brentwood, California 94513. The bids will be publicly opened and read aloud in the First Floor Vista Conference Room at Brentwood City Hall, 150 City Park Way, Brentwood, CA 94513.

2. Project Information.

2.1 Location and Description. The Project is located at 2251 Elkins Way, Brentwood, CA 94513, and is described as follows: *the work includes sand blasting and recoating of concrete in chemical storage tank and chemical room of the Wastewater Treatment Plant.*

2.2 Construction Time. The planned timeframe for beginning and completion of construction of the Project is: 30 working days.

2.3 Engineer's Estimate. The City Engineer's estimate for the cost of construction cost is: $85,000.

3. License and Registration Requirements.

3.1 License. This Project requires a valid California contractor's license for the following classification(s): Class "A" or combination of Class "C" Specialty Contractor's License(s)

3.2 DIR Registration. City will not accept a *Bid Proposal* from or enter into a contract with a bidder without proof that the bidder and its subcontractors are registered with the California Department of Industrial Relations ("DIR") to perform public work under Labor Code Section 1725.5, subject to limited legal exceptions.

4. Contract Documents. Bidders must obtain an electronic copy of the Contract Documents directly from the City of Brentwood. The Contract Documents may be obtained at no charge by sending an email to: engineering@brentwoodca.gov or by calling 925-516-5420. The City may reject a bid submitted by a bidder that did not obtain the Contract Documents from the City as required.

5. Bid Proposal and Security.

5.1 Bid Proposal Form. Each Bid must be submitted using the *Bid Proposal* form provided with the Contract Documents.

5.2 Bid Security. The *Bid Proposal* must be accompanied by bid security of ten percent of the maximum bid amount, in the form of a cashier's or certified check made payable to the City of Brentwood, or a bid bond executed by a surety licensed to do business in the State of California on the *Bid Bond* form included with the Contract Documents. The bid security must guarantee that upon award of the bid, the bidder will execute the *Contract* and submit payment and performance bonds and insurance certificates as required by the Contract Documents within ten days after issuance of the notice of award.

6. Prevailing Wage Requirements.

6.1 General. This Project is subject to the prevailing wage requirements applicable to the locality in which the Work is to be performed for each craft, classification or type of worker needed to perform the Work, including employer payments for health and welfare, pension, vacation, apprenticeship and similar purposes.

6.2 Rates. These prevailing rates are available online at http://www.dir.ca.gov/DLSR. Each Contractor and Subcontractor must pay no less than the specified rates to all workers employed to work on the Project. The schedule of per diem wages is based upon a working day of eight hours. The rate for holiday and overtime work must be at least time and one-half.

6.3 Compliance. This Contract is subject to compliance monitoring and enforcement by the DIR, under Labor Code Section 1771.4.

7. Performance and Payment Bonds. The successful bidder will be required to provide performance and payment bonds for 100% of the Contract Price.

8. Substitution of Securities. Substitution of appropriate securities in lieu of retention amounts from progress payments is permitted under Public Contract Code Section 22300.

9. Subcontractor List. Each bidder must submit the name, location of the place of business, and California contractor license number, DIR registration number, and percentage of the Work to be performed for each Subcontractor who will perform Work or service or fabricate or install Work for the prime contractor in excess of one-half of 1% of the bid price, using the *Subcontractor List* form included with the Contract Documents. No more than 50% of the Work may be performed by Subcontractors.

10. Instructions to Bidders. Additional information is provided in the *Instructions to Bidders*, which should be carefully reviewed before submitting a *Bid Proposal*.

11. Bidders' Conference. A bidders' conference will be held on February 19, 2016 at 10:30 a.m. at the following location: 2251 Elkins Way, Brentwood for the purpose of acquainting all prospective bidders with the Contract Documents and the Worksite. The bidders' conference is not mandatory.

By: Margaret Wimberly _____ 2/8/16

Margaret Wimberly MMC, City Clerk — Date

INSTRUCTIONS TO BIDDERS

Each *Bid Proposal* submitted to the City of Brentwood ("City") for its Wastewater Treatment Plant Chemical Storage Corrosion Control ("Project") must be submitted in accordance with the following instructions and requirements:

1. Bid Submission.

1.1 General. Each bid must be signed, sealed and submitted to the City, using the form provided in the Contract Documents ("*Bid Proposal*"), by or before the date and time set forth in the *Notice Inviting Bids*, or as amended by subsequent addendum. Faxed or emailed *Bid Proposals* will not be accepted, unless otherwise specified. Late submissions will be returned unopened. City reserves the right to postpone the date and time for receiving or opening bids. Each bidder is solely responsible for all of its costs to prepare and submit its bid and by submitting a bid waives any right to recover those costs from City. The bid price(s) must include all costs to perform the Work as specified, including all indirect costs such as applicable taxes, insurance and field offices.

1.2 Bid Envelope. The envelope containing the sealed *Bid Proposal* and required attachments must be clearly labeled and addressed as follows:

Bid Proposal
Wastewater Treatment Plant Chemical Storage Corrosion Control
CIP Project No. 592-59201
Bid Date: _____
City of Brentwood
150 City Park Way
Brentwood, California 94513
Attn: City Clerk

The envelope must also be clearly labeled as follows with the bidder's name, address, and its registration number as required by the California Department of Industrial Relations ("DIR") for public works contracts:

[Contractor company name]
[street address]
[city, state, zip code]
DIR Registration No: _____

Please note: If the City is unable to confirm that the bidder's DIR registration is current, the City must disqualify the bidder and return its bid unopened. (Labor Code section 1725.5.)

2. Examination of Contract Documents and Project Site. Bidder's Responsibilities. Each bidder is solely responsible for diligent and thorough review of the Contract Documents (as defined in the *General Conditions*), examination of Project site, and reasonable and prudent inquiry concerning known and potential site conditions prior to submitting a *Bid Proposal*. However, bidders should not enter onto the Project site without prior written authorization from City. Bidders are responsible for reporting any errors or omissions in the Contract Documents to City prior to submitting a *Bid Proposal*, subject to

the limitations of Public Contract Code Section 1104. City expressly disclaims responsibility for assumptions the bidder might draw from the presence or absence of information provided by City.

3. **Requests for Information.** Questions regarding the Project, the bid procedures or any of the Contract Documents must be submitted in writing using the *Bidder's Request for Information* form provided, at least five working days before the date specified for submission of Bids, to: John Samuelson at engineering@brentwoodca.gov.

4. **Addenda.** Any addenda issued prior to the bid opening will constitute part of the Contract Documents. Subject to the limitations of Public Contract Code section 4104.5, City reserves the right to issue addenda prior to bid time.

5. **Brand Designations and "Or Equal" Substitutions.** Any specification designating a material, product, thing, or service by specific brand or trade name, followed by the words "or equal," is intended only to indicate quality and type of item desired, and bidders may request use of any equal material, product, thing, or service. All data substantiating the proposed substitute as an "equal" item must be submitted with the written request for substitution. All data substantiating the proposed substitute as an "equal item" must be submitted with the written request for substitution. The City Engineer has the sole discretion to determine whether a proposed substitute is an "equal" item, and the City Engineer's decision is final. This provision does not apply to materials, products, things, or services that may lawfully be designated by a specific brand or trade name under Public Contract Code Section 3400(c). Any request for substitution must be submitted to the City Engineer at least five Working Days before the opening of bids so that all interested bidders may be notified of any approved alternative.

6. **Bidders Interested in More Than One Bid.** No person, firm, or corporation may submit or be a party to more than one *Bid Proposal* unless alternate bids are specifically called for. However, a person, firm, or corporation that has submitted a subcontract proposal or quote to a bidder may submit subcontract proposals or quotes to other bidders, and may also submit a *Bid Proposal* as a prime contractor.

7. **Bid Proposal Form and Enclosures.**

   7.1 Bid Proposal Form. Each *Bid Proposal* must be completed in ink using the *Bid Proposal* form included in the Contract Documents. The *Bid Proposal* form should be fully completed without interlineations, alterations, or erasures. Any necessary corrections must be clear and legible, and must be initialed by the bidder's authorized representative. A *Bid Proposal* submitted with terms such as "negotiable," "will negotiate," or similar, will be considered non-responsive.

   7.2 Enclosures. Each *Bid Proposal* must be accompanied by bid security, as set forth in Section 9 below, and by the completed *Bid Schedule*, *Subcontractor List*, *Non-Collusion Declaration*, and any other required enclosures, using the forms included in the Contract Documents.

   7.3 Bidder's Questionnaire. After the bids have been opened, the City may request a completed, signed *Bidder's Questionnaire* from one or more of the apparent low bidders. The *Bidder's Questionnaire* must be submitted within 48 hours of the City's request, using the form provided by City. If a bidder fails to fully comply with this

requirement following the City's request, its *Bid Proposal* may be rejected as nonresponsive. A bidder who submits a *Bidder's Questionnaire* which is subsequently determined to contain false or misleading information, or material omissions, may be disqualified as non-responsible.

8. Signature Requirements. Each *Bid Proposal* must be signed by the bidder's authorized representative. A *Bid Proposal* submitted by a partnership must be signed in the partnership name by a general partner with authority to bind the partnership. A *Bid Proposal* submitted by a corporation must be signed with the legal name of the corporation, followed by the signature and title of two officers of the corporation with full authority to bind the corporation to the terms of the *Bid Proposal*, under California Corporation Code section 313. Alternatively, the *Bid Proposal* may attach a resolution of the corporation, certified by the secretary or assistant secretary under corporate seal, empowering the officer(s) signing the *Bid Proposal* to bind the corporation. A *Bid Proposal* submitted by a limited liability company must be signed with the legal name of the company followed by the signature or signatures required by the company's Articles of Organization.

9. Bid Security. Each *Bid Proposal* must be accompanied by bid security of ten percent of the maximum bid amount, in the form of a cashier's check, a certified check, or a bid bond, using the form included in the Contract Documents, executed by a surety licensed to do business in the State of California, made payable to the City of Brentwood. The bid security must guarantee that upon award of the bid, the bidder will execute and submit the *Contract* on the form included in the Contract Documents, will submit payment and performance bonds for 100% of the maximum Contract Price, and will submit the insurance certificates and endorsements as required by the Contract Documents within ten days after issuance of the notice of award.

10. Withdrawal of Bid Proposals. A *Bid Proposal* may not be withdrawn for a period of 90 days after the bid opening without forfeiture of the bid security, except as authorized for material error under Public Contract Code Section 5100 et seq.

11. Bid Protest. Any bid protest must be in writing and received by City Clerk's Office at 150 City Park Way, Brentwood, CA 94513 before 5:00 p.m. no later than two Working Days following bid opening (the "Bid Protest Deadline") and must comply with the following requirements:

11.1 General. Only a bidder who has actually submitted a *Bid Proposal* is eligible to submit a bid protest against another bidder. Subcontractors are not eligible to submit bid protests. A bidder may not rely on the bid protest submitted by another bidder, but must timely pursue its own protest. If required by City, the protesting bidder must submit a non-refundable fee in the amount specified by City, based upon City's reasonable costs to administer the bid protest. Any such fee must be submitted to City no later than the Bid Protest Deadline, unless otherwise specified.

11.2 Protest Contents. The bid protest must contain a complete statement of the basis for the protest and all supporting documentation. Material submitted after the Bid Protest Deadline will not be considered. The protest must refer to the specific portion or portions of the Contract Documents upon which the protest is based. The protest must include the name, address, email address, and telephone number of the person representing the protesting bidder if different from the protesting bidder.

11.3 Copy to Protested Bidder. A copy of the protest and all supporting documents must be concurrently transmitted by fax or by email, by or before the Bid Protest Deadline, to the protested bidder and any other bidder who has a reasonable prospect of receiving an award depending upon the outcome of the protest.

11.4 Response to Protest. The protested bidder may submit a written response to the protest, provided the response is received by City before 5:00 p.m., within two Working Days after the Bid Protest Deadline or after actual receipt of the bid protest, whichever is sooner (the "Response Deadline"). The response must include all supporting documentation. Material submitted after the Response Deadline will not be considered. The response must include the name, address, email address, and telephone number of the person representing the protested bidder if different from the protested bidder.

11.5 Copy to Protesting Bidder. A copy of the response and all supporting documents must be concurrently transmitted by fax or by email, by or before the Response Deadline, to the protesting bidder and any other bidder who has a reasonable prospect of receiving an award depending upon the outcome of the protest.

11.6 Exclusive Remedy. The procedure and time limits set forth in this section are mandatory and are the bidder's sole and exclusive remedy in the event of bid protest. A bidder's failure to comply with these procedures will constitute a waiver of any right to further pursue a bid protest, including filing a Government Code Claim or initiation of legal proceedings.

11.7 Right to Award. City reserves the right to award the Contract to the bidder it has determined to be the responsible bidder submitting the lowest responsive bid, and to issue a notice to proceed with the Work notwithstanding any pending or continuing challenge to its determination.

12. Rejection of Bids; Award of Contract. City reserves the right, acting in its sole discretion, to waive immaterial bid irregularities, the right to accept or reject any and all bids, or to abandon the Project entirely. The Contract will be awarded, if at all, within 90 calendar days after opening of bids or as otherwise specified in the Special Conditions, to the responsible bidder that submitted the lowest responsive bid.

13. Bonds. The successful bidder is required to submit payment and performance bonds as specified in the Contract Documents using the bond forms included in the Contract Documents. All required bonds must be calculated on the maximum total Contract price as awarded, including additive alternates, if applicable.

14. Evidence of Responsibility. Within 24 hours following a request by City, a bidder must submit to the City satisfactory evidence showing the bidder's financial resources, the bidder's experience in the type of work being required by the City, the bidder's organization available for the performance of the Contract and any other required evidence of the bidder's qualifications to perform the proposed Contract. The City may consider such evidence before making its decision awarding the proposed Contract.

15. License(s). The successful bidder and its Subcontractor(s) must possess the California contractor's license(s) in the classification(s) required by law to perform the Work, and must also obtain a City of Brentwood business license before performing any Work on the Project. These licenses must remain in effect at all times while Work is being performed on the Project.

16. Ineligible Subcontractor. Any subcontractor who is ineligible to perform work on a public works project under Labor Code Sections 1777.1 or 1777.7 is prohibited from performing Work on this Project.

17. DIR Registration. City will not accept a *Bid Proposal* from or enter into a contract with a bidder without proof that the bidder and its subcontractors are registered with the DIR to perform public work under Labor Code Section 1725.5, subject to limited legal exceptions.

18. Bid Schedule. Each bidder must fully complete the *Bid Schedule* form accompanying the *Bid Proposal* form with unit prices as indicated, and must submit the completed *Bid Schedule* with its *Bid Proposal*.

18.1 Incorrect Totals. In the event of a discrepancy between the actual total of the itemized or unit prices shown on the *Bid Schedule* for the base bid, and the amount entered as the base bid on the *Bid Proposal* form, the actual total of the itemized or unit prices shown on the *Bid Schedule* for the base bid will be deemed the base bid price. Likewise, in the event of a discrepancy between the actual total of the itemized or unit prices shown on the *Bid Schedule* for any bid alternate, and the amount entered for the alternate on the *Bid Proposal* form, the actual total of the itemized prices shown on the *Bid Schedule* for that alternate will be deemed the alternate price. Nothing in this provision is intended to prevent a bidder from requesting to withdraw its bid for material error under Public Contract Code Section 5100 et seq.

18.2 Estimated Quantities. The quantities shown on the *Bid Schedule* are estimated and the actual quantities required to perform the Work may be greater or less than the estimated amount. The Contract Price will be adjusted to reflect the actual quantities required for the Work based on the itemized or unit prices provided in the *Bid Schedule*, with no allowance for anticipated profit for quantities that are deleted or decreased.

19. Post-Award Requests for Information. After the Contract is awarded, the Contractor must submit written requests for information to:

John Samuelson, Project Manager
City of Brentwood
Public Works – Engineering Division
Phone: (925) 516-5420 Fax: (925) 516-5421
150 City Park Way
Brentwood, CA 94513
engineering@brentwoodca.gov

BIDDER'S REQUEST FOR INFORMATION FORM

Wastewater Treatment Plant Chemical Storage Corrosion Control
CIP Project No. 592-59201

All requests for information from bidders must be submitted in writing using this form. Fax or email the completed form to: City of Brentwood
Fax: (925) 516-5421
Email: engineering@brentwoodca.gov

COMPANY NAME: _____

CONTACT: _____

COMPANY ADDRESS: _____

_____

_____

Question/Information Requests:

Please use the spaces below to clearly set forth each separate question or request for information, providing specific references to the subject document and provision. Attach additional sheets as necessary, continuing with sequential numbering for each request.

1. _____

_____

2. _____

_____

3. _____

_____

4. _____

_____

5. _____

_____

6. _____

_____

BID PROPOSAL

_____ ("Bidder") hereby submits this *Bid Proposal* to the City of Brentwood ("City") for its Wastewater Treatment Plant Chemical Storage Corrosion Control ("Project") in response to the *Notice Inviting Bids*

1. Base Bid. Bidder proposes to perform and fully complete the Work for the Project as specified in the Contract Documents, within the time required for full completion of the Work, for the following price ("Base Bid"):
$ _____. *[Note: The amount entered should be identical to the amount provided as "Total Base Bid" on the final page of the Bid Schedule.]*

2. Addenda. Bidder acknowledges receipt of the following addenda:

Addendum:	Date Received:	Addendum:	Date Received:
#01	_____	#05	_____
#02	_____	#06	_____
#03	_____	#07	_____
#04	_____	#08	_____

3. Bidder's Warranties. By signing and submitting this *Bid Proposal*, Bidder warrants the following:

3.1 Examination of Contract Documents. Bidder has thoroughly examined the Contract Documents, and represents that, to the best of Bidder's knowledge there are no errors, omissions, or discrepancies in the Contract Documents subject to the limitations of Public Contract Code Section 1104.

3.2 Examination of Worksite. Bidder has had the opportunity to examine the Worksite and local conditions at the Project location.

3.3 Bidder is Qualified. Bidder is fully qualified to perform the Work.

3.4 Responsibility for Bid. Bidder has carefully reviewed this *Bid Proposal* and is solely responsible for any errors or omissions contained in its completed Bid.

4. Award of Contract . By signing and submitting this *Bid Proposal*, Bidder agrees that if Bidder is awarded the Contract for the Project, that within ten days following issuance of the Notice of Award to Bidder, Bidder will do all of the following:

4.1 Execute Contract. Enter into the Contract with City in accordance with the terms of this *Bid Proposal*, by signing and submitting to City the *Contract* prepared by City using the form included with the Contract Documents;

4.2 Submit Required Bonds. Submit to City the *Payment Bond* and the *Performance Bond*, each for 100% of the Contract Price, using the bond forms provided and in accordance with the requirements of the Contract Documents; and

REFERENCE ONLY

4.3 Insurance Requirements. Submit to City the insurance certificate(s) and endorsement(s) as required by the Contract Documents.

5. Bid Security. As a guarantee that if awarded the Contract, it will perform its obligations under Section 4, above, Bidder is enclosing bid security in the amount of ten percent of its maximum bid amount in the following form:

____ A cashier's check or certified check payable to City and issued by _____ Bank in the amount of $_____.

____ A bid bond, using the *Bid Bond* form included with the Contract Documents, payable to City and executed by a surety licensed to do business in the State of California.

This *Bid Proposal* is hereby submitted on _____, 20____:

s/_____* _____
Name and Title [print]

s/_____** _____
Name and Title [print]

_____ _____
Company Name Calif. License # and Classification

_____ _____
Address Phone

_____ _____
City, State, Zip Fax

If required by City, a notarized acknowledgment of execution by Bidder must be attached to the *Bid Proposal*. If a Bidder is a corporation, the *Bid Proposal* must be signed by one corporate officer from each of the following two groups.

***Group A.**
Chairman,
President, **or**
Vice-President

****Group B.**
Secretary,
Assistant Secretary,
CFO **or** Assistant Treasurer

Otherwise, the corporation **must** attach a resolution certified by the secretary or assistant secretary under corporate seal empowering the officer(s) signing to bind the corporation.

REFERENCE ONLY

BID SCHEDULE

Wastewater Treatment Plant Chemical Storage Corrosion Control
CIP Project No. 592-59201

This *Bid Schedule* must be completed in ink and must be included with the sealed *Bid Proposal*. The unit cost for each item must be inclusive of all costs, whether direct or indirect, including profit and overhead. The sum of all amounts entered in the "Extended Total Amount" column must be identical to the Base Bid price entered in Section 1 of the *Bid Proposal* Form. See Section 18 of the *Instructions to Bidders*.

BID ITEM NO.	ITEM DESCRIPTION	EST. QTY.	UNIT	UNIT COST	EXTENDED TOTAL AMOUNT
1	**Remove and Replace Protective Coating**	**1**	**LS**	$	$

TOTAL BASE BID: Item 1 inclusive: $_____

[Note: The amount entered as the "Total Base Bid" should be identical to the Base Bid amount entered in Section 1 of the Bid Proposal form.]

BIDDER NAME: _____

REFERENCE ONLY

SUBCONTRACTOR LIST

Wastewater Treatment Plant Chemical Storage Corrosion Control
CIP Project No. 592-59201

For each Subcontractor who will perform a portion of the Work in an amount in excess of one-half of 1% of the Bidder's total Contract Price,[1] the bidder must list the Subcontractor's name and address for its place of business, its California contractor license number, DIR registration number, a description of the Subcontractor's work and the subcontract price, and the percentage of work to be performed by that Subcontractor. **The Contractor must perform at least 50% of the Work with its own forces.**

SUBCONTRACTOR NAME AND ADDRESS	CA CONTRACTOR LICENSE NUMBER	DIR REG. NO.	DESCRIPTION OF WORK AND SUBCONTRACT PRICE	PERCENT OF TOTAL WORK

REFERENCE ONLY

[1] For street or highway construction this requirement applies to any subcontract of $10,000 or more.

NONCOLLUSION DECLARATION

Wastewater Treatment Plant Chemical Storage Corrosion Control
CIP Project No. 592-59201

TO BE EXECUTED BY BIDDER AND SUBMITTED WITH BID

The undersigned declares:

I am the _____ of _____, the party making the foregoing bid.

The bid is not made in the interest of, or on behalf of, any undisclosed person, partnership, company, association, organization, or corporation. The bid is genuine and not collusive or sham. The bidder has not directly or indirectly induced or solicited any other bidder to put in a false or sham bid. The bidder has not directly or indirectly colluded, conspired, connived, or agreed with any bidder or anyone else to put in a sham bid, or to refrain from bidding. The bidder has not in any manner, directly or indirectly, sought by agreement, communication, or conference with anyone to fix the bid price of the bidder or any other bidder, or to fix any overhead, profit, or cost element of the bid price, or of that of any other bidder. All statements contained in the bid are true. The bidder has not, directly or indirectly, submitted his or her bid price or any breakdown thereof, or the contents thereof, or divulged information or data relative thereto, to any corporation, partnership, company, association, organization, bid depository, or to any member or agent thereof, to effectuate a collusive or sham bid, and has not paid and will not pay, any person or entity for such purpose.

This declaration is intended to comply with California Public Contract Code Section 7106 and Title 23 U.S.C Section 112.

I declare under penalty of perjury under the laws of the State of California that the foregoing is true and correct and that this declaration is executed on _____ [date], at _____ [city], _____ [state].

s/_____

_____
Name and Title [print]

REFERENCE ONLY

BID BOND

_____ ("Bidder") has submitted a bid, dated _____, 20_____ ("Bid"), to the City of Brentwood ("City") for work on the Wastewater Treatment Plant Chemical Storage Corrosion Control ("Project"). Under this duly executed bid bond ("Bid Bond"), Bidder as Principal and _____, its surety ("Surety"), are bound to City as obligee in the penal sum of ten percent of the maximum amount of the Bid (the "Bond Sum"). Bidder and Surety bind themselves and their respective heirs, executors, administrators, successors and assigns, jointly and severally, as follows:

1. General. If Bidder is awarded the Contract for the Project, Bidder will enter into the Contract with the City in accordance with the terms of the Bid.

2. Submittals. Within ten days following issuance of the notice of award to Bidder, Bidder must submit to City the following:

2.1 Contract. The executed *Contract*, using the form provided by City in the Project Contract Documents ("Contract Documents");

2.2 Payment Bond. A payment bond for 100% of the maximum Contract Price, executed by a surety licensed to do business in the State of California using the *Payment Bond* form included with the Contract Documents;

2.3 Performance Bond. A performance bond for 100% of the maximum Contract Price, executed by a surety licensed to do business in the State of California using the *Performance Bond* form included with the Contract Documents; and

2.4 Insurance. The insurance certificate(s) and endorsement(s) required by the Contract Documents, and any other documents required under the *Instructions for Bidders*.

3. Enforcement. If Bidder fails to execute the *Contract* and to submit the bonds and insurance certificates as required by the Contract Documents, Surety guarantees that Bidder forfeits the Bond Sum to City. Any notice to Surety may be given in the manner specified in the *Contract* and delivered or transmitted to Surety as follows:

Attn: _____

Address: _____

City/State/Zip: _____

Phone: _____

Fax: _____

Email: _____

4. Duration; Waiver. If Bidder fulfills its obligations under Section 2, above, then this obligation will be null and void; otherwise it will remain in full force and effect for 90 days following award of the Contract or until this *Bid Bond* is returned to Bidder, whichever occurs first. Surety waives the provisions of Civil Code Sections 2819 and 2845.

REFERENCE ONLY

This Bid Bond is entered into and effective on _____, 20_____.

SURETY:

_____

s/ _____

Name: _____

Title: _____

(Attach Acknowledgement, Notary Seal, and Attorney-In-Fact Certificate)

CONTRACTOR:

_____

s/ _____

Name: _____

Title: _____

REFERENCE ONLY

BIDDER'S QUESTIONNAIRE

Wastewater Treatment Plant Chemical Storage Corrosion Control
CIP Project No. 592-59201

After the bids have been opened, the City may request a completed, signed *Bidder's Questionnaire* from one or more of the apparent low bidders. The *Bidder's Questionnaire* must be submitted within 48 hours of the City's request, using this form and attaching additional pages as required. City may use the completed Questionnaire to evaluate the Bidder's qualifications for this Project. The Questionnaire must be filled out completely, accurately, and legibly. Any delay, errors, omissions, or misrepresentations in completion of the Questionnaire may be grounds for rejection of the bid or termination of the Contract.

Part 1: General Information

Bidder Name: _____ ("Bidder")

Check One: ___ Corporation
___ Partnership
___ Sole Proprietorship
___ Joint Venture of:_____
___ Other:_____

Contact Person: _____

Part 2: Bidder Experience

1. How many years has Bidder been in business under its present business name?

_____

2. Has Bidder completed projects similar in type and size to this Project as a general contractor?

_____

3. Has Bidder ever been disqualified on grounds that it is not responsible?
   Yes_____ No_____

If yes, provide additional information on a separate sheet of paper regarding the disqualification, including the name and address of the agency or City of the subject project, the type and size of the project, the reasons that Bidder was disqualified as not responsible, and the month and year in which the disqualification occurred.

4. Has Bidder ever been terminated from a construction project, either as a general contractor or as a subcontractor? Yes_____ No_____

If yes, provide additional information on a separate sheet of paper regarding the termination, including the name and address of the agency or City of the subject project, the type and size of the project, whether Bidder was under contract as a prime contractor or a subcontractor, the reasons that Bidder was terminated, and the month and year in which the termination occurred.

5. Provide information about Bidder's past projects performed as general contractor as follows:

   5.1 Six most recently completed public works projects within the last three years;

   5.2 Three largest completed projects within the last three years; and

   5.3 Any project which is similar to this Project.

6. Using separate sheets of paper attached to this Questionnaire, provide all of the following information for each project identified in response to the above three categories:

   6.1. Project Name
   6.2. Location
   6.3. City
   6.4. City Contact (name and current phone number)
   6.5. Architect or Engineer Name
   6.6. Architect or Engineer Contact (name and current phone number)
   6.7. Construction Manager (name and current phone number)
   6.8. Description of Project, Scope of Work Performed
   6.9. Initial Contract Value (at time of bid award)
   6.10. Final Cost of Construction (including change orders)
   6.11. Original Scheduled Completion Date
   6.12. Time Extensions Granted (number of days)
   6.13. Actual Date of Completion
   6.14. Number and amount of Stop Notices or Mechanic's Liens filed
   6.15. Amount of liquidated damages assessed against Bidder
   6.16. Nature and resolution of any claim, lawsuit, and/or arbitration between Bidder and the City

Part 3: Verification

In signing this document, I, the undersigned, declare that I am duly authorized to sign and submit this *Bidder's Questionnaire* on behalf of the named Bidder, and that all responses and information set forth in this *Bidder's Questionnaire* and accompanying attachments are, to the best of my knowledge, true, accurate and complete as of the date of submission. **I declare under penalty of perjury under the laws of the State of California that the foregoing is true and correct.**

Signature: _____ Date: _____

By [name, title]: _____

For [name of Bidder]: _____

CONTRACT

Wastewater Treatment Plant Chemical Storage Corrosion Control
CIP Project No. 592-59201

This public works contract ("Contract") is entered into by and between the City of Brentwood ("City") and _____ ("Contractor") for work on the Wastewater Treatment Plant Chemical Storage Corrosion Control ("Project").

The parties agree as follows:

1. **Award of Contract**. In response to the *Notice Inviting Bids*, Contractor has submitted a *Bid Proposal* to perform work on the Project, and on _____, 20___, the Brentwood City Council authorized award of this Contract to Contractor for the amount of Contractor's bid.

2. **Contract Documents**. The Contract Documents incorporated into this Contract include and are comprised of all of the following:

2.1 Notice Inviting Bids;
2.2 Instructions for Bidders;
2.3 Addenda, if any;
2.4 Bid Proposal and required attachments;
2.5 Contract;
2.6 Payment and Performance Bonds;
2.7 General Conditions;
2.8 Special Conditions;
2.9 Project Drawings and Specifications;
2.10 Change Orders, if any;
2.11 Notice of Award;
2.12 Notice to Proceed;
2.13 Brentwood Standard Plans and Specifications;
2.14 And the following: No other documents.

3. **Contractor's Obligations.** Contractor agrees to perform all of the Work required for the Project, as specified in the Contract Documents. Contractor must provide, furnish, and supply all things necessary and incidental for the timely performance and completion of the Work, including all necessary labor, materials, equipment, transportation, and utilities, unless otherwise specified in the Contract Documents. Contractor must use its best efforts to complete the Work in a professional and expeditious manner and to meet or exceed the performance standards required by the Contract Documents.

4. **Payment.** As full and complete compensation for Contractor's timely performance and completion of the Work in strict accordance with the terms and conditions of the Contract Documents, City will pay Contractor _____ Dollars ($_____) (the "Contract Price"), in accordance with the payment provisions in the *General Conditions*.

5. **Time for Completion.** Contractor will fully complete the Work for the Project within 30 Working days from the commencement date given in the Notice to Proceed ("Contract Time"). By signing below, Contractor expressly waives any claim for delayed early completion.

6. **Liquidated Damages.** If Contractor fails to complete the Work within the Contract Time, City will assess liquidated damages in the amount of Five Hundred Dollars ($500) for each day of unexcused delay in completion, and the Contract Price will be reduced accordingly.

7. **Labor Code Compliance.**

   7.1 **General.** This Contract is subject to all applicable requirements of Chapter 1 of Part 7 of Division 2 of the Labor Code, including requirements pertaining to wages, working hours and workers' compensation insurance.

   7.2 **Prevailing Wages.** This Project is subject to the prevailing wage requirements applicable to the locality in which the Work is to be performed for each craft, classification or type of worker needed to perform the Work, including employer payments for health and welfare, pension, vacation, apprenticeship and similar purposes. Copies of these prevailing rates are available online at http://www.dir.ca.gov/DLSR.

   7.3 **DIR Registration.** City will not accept a *Bid Proposal* from or enter into a contract with a bidder without proof that the bidder and its Subcontractors are registered with the California Department of Industrial Relations ("DIR") to perform public work under Labor Code Section 1725.5, subject to limited legal exceptions.

8. **Workers' Compensation Certification.** Under Labor Code Section 1861, by signing this *Contract*, Contractor certifies as follows: "I am aware of the provisions of Labor Code Section 3700 which require every employer to be insured against liability for workers' compensation or to undertake self-insurance in accordance with the provisions of that code, and I will comply with such provisions before commencing the performance of the Work on this Contract."

9. **Notice.** Any notice, billing, or payment required by the Contract Documents must be made in writing, and sent to the other party by personal delivery, U.S. Mail, a reliable overnight delivery service, facsimile, or by email as a PDF (or comparable) file. Notice is deemed effective upon delivery unless otherwise specified. Notice for each party must be given as follows:

	City of Brentwood	**Contractor**
Name/Title	John Samuelson	
Address	150 City Park Way	
City/state/zip	Brentwood/CA 94513	
Phone	925-516-5420	
Fax	925-516-5421	
Email	engineering@brentwoodca.gov	

10. **General Provisions.**

   10.1 **Assignment and Successors.** Contractor may not assign its rights or obligations under this Contract, in part or in whole, without City's written consent. This Contract is binding on Contractor's successors and permitted assigns.

10.2 Third Party Beneficiaries. There are no intended third party beneficiaries to this Contract except as expressly provided in the *General Conditions* or *Special Conditions*.

10.3 Governing Law and Venue. This Contract will be governed by California law and venue will be in the California Superior Court in Contra Costa County, and no other place.

10.4 Amendment. No amendment or modification of this Contract will be binding unless it is in a writing duly authorized and signed by the parties to this *Contract*.

10.5 Integration; Severability. This Contract and the Contract Documents incorporated herein, including authorized amendments or Change Orders thereto, constitute the final, complete, and exclusive terms of the agreement between City and Contractor. If any provision of the Contract Documents, or portion of a provision, is determined to be illegal, invalid, or unenforceable, the remaining provisions of the Contract Documents will remain in full force and effect.

10.6 Authorization. Each individual signing below warrants that he or she is authorized to do so by the party that he or she represents, and that this Contract is legally binding on that party. If Contractor is a corporation, signatures from two officers of the corporation are required pursuant to California Corporation Code Section 313. Alternatively, the Contractor may attach a resolution of the corporation, certified by the secretary or assistant secretary under corporate seal, empowering the officer(s) signing the Contract to bind the corporation.

[Signatures are on the following page.]

The parties agree to this Contract as witnessed by the signatures below:

CONTRACTOR:

* By: _____

Printed Name: _____

Title: _____

** By: _____

Printed Name: _____

Title: _____

CITY OF BRENTWOOD:

By: _____
Gustavo "Gus" Vina, City Manager

ATTEST:

By: _____
Margaret Wimberly, MMC, City Clerk

APPROVED AS TO FORM:

By: _____
Damien Brower, City Attorney

If required by City, a notarized acknowledgment of execution by Contractor must be attached. If a Contractor is a corporation, Contract must be signed by one corporate officer from each of the following two groups.

***Group A.**
Chairman,
President, **or**
Vice-President

****Group B.**
Secretary,
Assistant Secretary,
CFO **or** Assistant Treasurer

Otherwise, the corporation **must** attach a resolution certified by the secretary or assistant secretary under corporate seal empowering the officer(s) signing to bind the corporation.

Date: _____

_____
Contractor's Calif. License Number(s)

Seal:

_____
Expiration Date(s)

PAYMENT BOND

The City of Brentwood ("City") and _____ ("Contractor") have entered into a contract, dated _____, 20___ ("Contract") for work on the Wastewater Treatment Plant Chemical Storage Corrosion Control ("Project"). The Contract is incorporated by reference into this *Payment Bond* ("Bond").

1. **General.** Under this Bond, Contractor as principal and _____, its surety ("Surety"), are bound to City as obligee in an amount not less than ($_____) ("Bond Sum"), under California Civil Code Sections 9550, et seq.

2. **Surety's Obligation.** If Contractor or any of its Subcontractors fails to pay any of the persons named in California Civil Code Section 9100 amounts due under the Unemployment Insurance Code with respect to work or labor performed under the Contract, or for any amounts required to be deducted, withheld, and paid over to the Employment Development Department from the wages of employees of the Contractor and its Subcontractors, under California Unemployment Insurance Code Section 13020, with respect to the work and labor, then Surety will pay for the same.

3. **Beneficiaries.** This Bond inures to the benefit of any of the persons named in California Civil Code Section 9100, so as to give a right of action to those persons or their assigns in any suit brought upon this Bond. Contractor must promptly provide a copy of this Bond upon request by any person with legal rights under this Bond.

4. **Duration.** If Contractor promptly makes payment of all sums for all labor, materials, and equipment furnished for use in the performance of the Work required by the Contract, in conformance with the time requirements set forth in the Contract and as required by California law, Surety's obligations under this Bond will be null and void. Otherwise, Surety's obligations will remain in full force and effect.

5. **Waivers.** Surety waives any requirement to be notified of alterations to the *Contract* or extensions of time for performance of the Work under the Contract. Surety waives the provisions of Civil Code Sections 2819 and 2845. City waives requirement of a new bond for any supplemental contract under Civil Code Section 9550. Any notice to Surety may be given in the manner specified in the Contract and delivered or transmitted to Surety as follows:

   Attn: _____

   Address: _____

   City/State/Zip: _____

   Phone: _____

   Fax: _____

   Email: _____

6. **Law and Venue.** This Bond will be governed by California law, and any dispute pursuant to this Bond will be venued in the Superior Court of the County in which the Project is

located, and no other place. Surety will be responsible for City's attorneys' fees and costs in any action to enforce the provisions of this Bond.

7. Effective Date; Execution. This Bond is entered into and is effective on _____, 20_____.

SURETY:

_____

s/ _____

Name: _____

Title: _____

(Attach Acknowledgment with Notary Seal and Power of Attorney)

CONTRACTOR:

_____

s/ _____

Name: _____

Title: _____

APPROVED BY CITY:

_____

s/ _____

Name: _____

Title: _____

PERFORMANCE BOND

The City of Brentwood ("City") and _____ ("Contractor") have entered into a contract, dated _____, 20____ ("Contract") for work on the Wastewater Treatment Plant Chemical Storage Corrosion Control ("Project"). The Contract is incorporated by reference into this *Performance Bond* ("Bond").

1. General. Under this Bond, the Contractor as Principal and _____, its surety ("Surety"), are bound to City as obligee for an amount not less than Dollars ($_____) (the "Bond Sum"). By executing this Bond, Contractor and Surety bind themselves and their respective heirs, executors, administrators, successors and assigns, jointly and severally, to the provisions of this Bond.

2. Surety's Obligations; Waiver. If Contractor fully performs its obligations under the Contract, including its warranty obligations under the Contract. Surety's obligations under this Bond will become null and void upon recordation of the notice of completion, provided Contractor has timely provided a warranty bond as required under the Contract. Otherwise Surety's obligations will remain in full force and effect until expiration of the one year warranty period under the Contract. Surety waives any requirement to be notified of and further consents to any alterations to the Contract made under the applicable provisions of the Contract Documents, including changes to the scope of Work or extensions of time for performance of Work under the Contract. Surety waives the provisions of Civil Code Sections 2819 and 2845.

3. Application of Contract Balance. Upon making a demand on this Bond, City will make the Contract Balance available to Surety for completion of the Work under the Contract. For purposes of this provision, the "Contract Balance" is defined as the total amount payable by City to the Contractor as the Contract Price minus amounts already paid to Contractor, and minus any liquidated damages, credits, or backcharges to which City is entitled under the terms of the Contract.

4. Contractor Default. Upon written notification from City that Contractor is in default under Article 13 of the Contract *General Conditions*, time being of the essence, Surety must act within the time specified in Article 13 to remedy the default through one of the following courses of action:

4.1 Arrange for completion of the Work under the Contract by Contractor, with the City's consent, but only if Contractor is in default solely due to its financial inability to complete the Work;

4.2 Arrange for completion of the Work under the Contract by a qualified contractor acceptable to City, and secured by performance and payment bonds issued by an admitted surety as required by the Contract Documents, at Surety's expense, or

4.3 Waive its right to complete the Work under the Contract and reimburse City the amount of City's costs to have the remaining Work completed.

5. Surety Default. If Surety defaults on its obligations under the Bond, City will be entitled to recover all costs it incurs due to Surety's default, including legal, design professional, or delay costs.

6. **Notice.** Any notice to Surety may be given in the manner specified in the Contract and delivered or transmitted to Surety as follows:

Attn: _____

Address: _____

City/State/Zip: _____

Phone: _____

Fax: _____

Email: _____

7. **Law and Venue.** This Bond will be governed by California law, and any dispute pursuant to this Bond will be venued in the Superior Court for the County in which the Project is located, and no other place. Surety will be responsible for City's attorneys' fees and costs in any action to enforce the provisions of this Bond.

8. **Effective Date; Execution.** This Bond is entered into and effective on _____, 20___.

SURETY:

_____

s/ _____

Name: _____

Title: _____

(Attach Acknowledgment with Notary Seal and Power of Attorney)

CONTRACTOR:

_____

s/ _____

Name: _____

Title: _____

WARRANTY BOND

The City of Brentwood ("City") and _____ ("Contractor") have entered into a contract, dated _____, 20___ ("Contract") for work on the Wastewater Treatment Plant Chemical Storage Corrosion Control ("Project"). The Contract is incorporated by reference into this *Warranty Bond* ("Bond").

1. **General.** Under this Bond, Contractor as principal and _____, its surety ("Surety"), are bound to City as obligee in the amount of 15 % of the final Contract Price, ("Bond Sum").

2. **Warranty Period.** The Contract requires Contractor to guarantee its work and that of its Subcontractors on the Project, against defects in materials or workmanship which are discovered during the one year period commencing with recordation of the Notice of Completion (the "Warranty Period").

3. **Surety's Obligations.** If Contractor faithfully carries out and performs its guarantee under the Contract, and, on due notice from City, repairs and make good at its sole expense any and all defects in materials and workmanship in the Project which are discovered during the Warranty Period, or if Contractor promptly reimburses City for all loss and damage that City sustains because of Contractor's failure to makes such repairs in accordance with the Contract requirements, then Surety's obligations under this Bond will be null and void. Otherwise, Surety's obligations will remain in full force and effect.

4. **Waiver.** Surety waives the provisions of Civil Code Sections 2819 and 2845.

5. **Notice.** Any notice to Surety may be given in the manner specified in the Contract and delivered or transmitted to Surety as follows:

   Attn: _____

   Address: _____

   City/State/Zip: _____

   Phone: _____

   Fax: _____

   Email: _____

6. **Law and Venue.** This Bond will be governed by California law, and any dispute pursuant to this Bond will be venued in the Superior Court in which the Project is located, and no other place. Surety will be responsible for City's attorneys' fees and costs in any action to enforce the provisions of this Bond.

7. **Effective Date; Execution.** This Bond is entered into and is effective on _____, 20_____.

[Signatures are on the following page.]

SURETY:

_____

s/ _____

Name: _____

Title: _____

(Attach Acknowledgment with Notary Seal and Power of Attorney)

CONTRACTOR:

_____

s/ _____

Name: _____

Title: _____

GENERAL CONDITIONS

Article 1 - Definitions

1.1 Definitions. The following definitions apply to all of the Contract Documents unless otherwise indicated. Defined terms and titles of documents are capitalized in the Contract Documents, with the exception of the words "day," "furnish," "including," "install," and "working day" or "work day."

Allowance means an amount included in the *Bid Proposal* for Work that may or may not be included in the Project, depending on conditions that will not become known until after bids are opened. If the Contract Price includes an Allowance and the cost of performing the Work covered by that Allowance is greater or less than the Allowance, the Contract Price will be increased or decreased accordingly.

Article, as used in these *General Conditions*, means a numbered Article of the *General Conditions*, unless otherwise indicated by the context.

Brentwood Standard Plans and Specifications means the most current version, at bid time, of the City's Standard Plans and Specifications.

Caltrans Standard Plans means the most current version at bid time of the Standard Plans of the California Department of Transportation.

Caltrans Standard Specifications means the version of the Standard Specifications of the California Department of Transportation specified in Section 2 of the *Contract* form, subject to the terms and limitations in Section 3.3 of the *General Conditions*.

Change Order means a written document duly approved and executed by City, which changes the scope of Work, the Contract Price, or the Contract Time.

City means the City of Brentwood, acting through its City Council, officers, employees, and authorized representatives.

City Engineer means the City Engineer and Director of Public Works for the City of Brentwood acting directly or through a duly authorized agent, which may be an employee of the City or an outside consultant.

Claim means a separate demand by Contractor for change in the Contract Time or Contract Price, that has previously been submitted to City in accordance with the requirements of the Contract Documents, and which has been rejected by City, in whole or in part; or a written demand by Contractor objecting to the amount of Final Payment.

Contract means the signed agreement between City and Contractor.

Contract Documents means, collectively, all of the documents listed as such in Section 2 of the *Contract*, including the *Notice Inviting Bids*; the *Instructions for Bidders*; addenda, if any; the *Bid Proposal*, and attachments thereto; the *Contract*; the notice of award and notice to proceed; the payment and performance bonds; the *General*

Conditions; the *Special Conditions*; the Project Drawings and Specifications; any Change Orders; and any other documents expressly made part of the Contract Documents.

Contract Price means the total compensation to be paid to the Contractor for performance of the Work, as set forth in the *Contract* and as amended by Change Order or adjusted for an Allowance. The Contract Price is not subject to adjustment due to inflation or due to the increased cost of labor, material, or equipment following submission of the *Bid Proposal*.

Contract Time means the number of Working Days for performance of the Work, as set forth in the *Contract* and as amended by Change Order.

Contractor means the individual, partnership, corporation, or joint-venture who has signed the *Contract* with City to perform the Work.

Day means a calendar day unless otherwise specified.

Design Professional means the licensed individual(s) or firm(s) retained by City to design the Project and to provide architectural or engineering services to ensure the Project is constructed as intended. If no Design Professional has been retained for this Project, any reference to Design Professional is deemed to refer to the City Engineer.

Drawings means the City-provided plans and graphical depictions of the Project requirements, and does not include Shop Drawings.

Final Completion means the Contractor has fully completed all of the Work required by the Contract Documents, including all punch list items, any required commissioning, and has provided all required submittals, including the *Warranty Bond*, instructions and manuals, and as-built drawings to the City's satisfaction.

Final Payment means payment to Contractor of the unpaid Contract Price, including release of undisputed retention, less amounts withheld pursuant to the Contract Documents, including liquidated damages, up to 125% of the amount of any unreleased stop notice, amounts subject to setoff, up to 150% of any unresolved third-party claim for which Contractor is required to indemnify City, and up to 150% of any amount in dispute as authorized by Public Contract Code Section 7107.

Furnish means to purchase and deliver to the Worksite designated for installation.

Hazardous Materials means any substance or material identified now or in the future as hazardous under any federal, state, or local law or regulation, or any other substance or material that may be considered hazardous or otherwise subject to statutory or regulatory requirements governing handling, disposal, or cleanup.

Including means "including, but not limited to," unless the context requires otherwise.

Inspector means the individual(s) or firm(s) retained by City to inspect the workmanship, materials, and manner of construction of the Project and its components to ensure compliance with the Contract Documents and all applicable codes, regulations, and permits.

Install means to fix in place for materials, and to fix in place and connect for equipment.

Project means the public works project referenced in the *Contract*.

Project Manager means the individual designated by City to oversee and manage the Project on City's behalf and may include his or her authorized delegee(s) when the Project Manager is unavailable.

Section as used in these *General Conditions*, means a numbered Section of the *General Conditions*, unless otherwise indicated by the context.

Shop Drawings means drawings, plan details or other graphical depictions prepared by or on behalf of Contractor, and subject to City approval, which are intended to provide details for fabrication, installation, and the like, of items required by or shown in the Drawings and Specifications.

Specifications means the technical, text specifications describing the Project requirements, which are prepared for and incorporated into this Project by or on behalf of City, and does not include the *Contract*, *General Conditions* or *Special Conditions*.

Subcontractor means an individual, partnership, corporation, or joint-venture retained by Contractor directly or indirectly through a subcontract to perform a specific portion of the Work. The term Subcontractor applies to subcontractors, suppliers, fabricators, and equipment lessors of all tiers, unless otherwise indicated by the context.

Technical Specifications means Specifications.

Work means all of the construction and services necessary or incidental to completing the Project in conformance with the requirements of the Contract Documents.

Working Day or Work Day means a day that City is open for normal business, excluding weekends and excluding holidays observed by City.

Worksite means the place or places where the Work is performed.

Article 2 - Roles and Responsibilities

2.1 Design Professional.

(A) ***General.*** Design Professional, as the City's representative, is responsible for the overall design of the Project, and to the extent authorized by City, may act on City's behalf to ensure performance of the Work in compliance with the Contract Documents.

(B) ***Interpretation.*** Design Professional will decide all questions pertaining to interpretation of the Drawings or Specifications. The Design Professional's decision regarding interpretation of the Drawings or Specifications is final and conclusive.

2.2 Contractor.

(A) ***General.*** Contractor must provide all labor, materials, equipment and services necessary to perform and timely complete the Work in strict accordance with the Contract Documents, and in an economic and efficient manner in the best interests of City. Contractor is solely responsible for all costs to perform the Work as specified in the Contract Documents, including any Work performed outside the Worksite.

(B) ***Responsibility for the Work.*** Contractor is solely responsible for supervising and directing all aspects of the Work to facilitate the efficient and timely completion of the Work. Contractor is solely responsible for, and required to exercise full control over, construction means, methods, techniques, sequences, procedures, and coordination of all portions of the Work with that of all other Contractors and Subcontractors, except to the extent that the Contract Documents provide other specific instructions.

(C) ***Project Administration.*** Contractor must provide sufficient and competent administration, staff, and skilled workforce necessary to perform and timely complete the Work in accordance with the Contract Documents. Before starting the Work, Contractor must designate in writing and provide complete contact information, including phone numbers and email address, for the officer or employee in Contractor's organization who is to serve as Contractor's primary representative for the Project, and who has authority to act on Contractor's behalf. A Subcontractor may not serve as Contractor's primary representative.

(D) ***On-Site Superintendent.*** Contractor must, at all times during performance of the Work, provide a qualified and competent full-time superintendent, acceptable to City, and assistants, as necessary, who must be physically present at the Project site while any aspect of the Work is being performed. Failure to comply may result in temporary suspension of the Work, at Contractor's sole expense and with no extension of Contract Time, until the superintendent is physically present to supervise the Work. Contractor must provide written notice to City, as soon as practicable, before replacing the superintendent.

(E) ***Standards; Compliance.*** Contractor must, at all times, ensure that the Work is performed in a good workmanlike manner following best practices and in full compliance with the Contract Documents and all applicable laws, regulations, codes, standards, and permits.

(F) ***Responsible Party.*** Contractor is solely responsible to City for the acts or omissions of any party or parties performing portions of the Work or providing equipment, materials or services for or on behalf of Contractor or its Subcontractors.

(G) ***Correction of Defects.*** Contractor must promptly correct, at Contractor's sole expense, any Work that is determined by City, Project Manager, or the Inspector to be deficient or defective in workmanship, materials, and equipment.

(H) ***Contractor's Records.*** Contractor must maintain all of its records relating to the Project in any form, including paper documents, photos, videos and electronic records. Project records subject to this provision include, but are not limited to, Project cost records and records relating to preparation of Contractor's bid.

(1) Contractor's cost records must include all supporting documentation, including original receipts, invoices, and payroll records, evidencing its direct costs to perform the Work, including, but not limited to, costs for labor, materials and equipment. Each cost record should include, at a minimum, a description of the expenditure with references to the applicable requirements of the Contract Documents, the amount actually paid, the date of payment, and whether the expenditure is part of the original Contract Price, related to an executed Change Order, or otherwise categorized by Contractor as extra work. Contractor's failure to comply with this provision as to any claimed cost operates as a waiver of any rights to recover the claimed cost.

(2) Contractor must continue to maintain its Project records in an organized manner for a period of four years after City's acceptance of the Project or following termination, whichever occurs first. Subject to prior notice to Contractor, City is entitled to inspect or audit any of Contractor's Project records relating to the Project or to investigate Contractor's plant or equipment during Contractor's normal business hours.

2.3 Subcontractors.

(A) ***General.*** Contractor must perform at least 50% of the Work with its own forces, as measured by the Contract Price. All Work which is not performed by Contractor with its own forces must be performed by qualified Subcontractors. City reserves the right to approve or reject any and all Subcontractors proposed to perform the Work.

(B) ***Contractual Obligations.*** Contractor must require every Subcontractor to be bound to the provisions of the Contract Documents as they apply to the Subcontractor's portion(s) of the Work, and to likewise bind their subcontractors or suppliers. Nothing in these Contract Documents creates a contractual relationship between a Subcontractor and City, but City is deemed to be a third-party beneficiary of the contract between Contractor and each Subcontractor.

(C) ***Termination of Contract.*** If the Contract is terminated, each Subcontractor's agreement must be assigned by Contractor to City, subject to the prior rights of any surety, provided that the City accepts the assignment by written notification, and assumes all rights and obligations of Contractor pursuant to each such subcontract agreement.

(D) ***Substitution of Subcontractor.*** If Contractor requests substitution of a listed Subcontractor under Public Contract Code Section 4107, Contractor is solely responsible for all costs City incurs in responding to the request, including legal fees and costs to conduct a hearing.

(E) ***Rejection of Subcontractor.*** If the City Engineer determines that a Subcontractor is unqualified to perform its Work, is failing to satisfactorily perform its Work, or is

otherwise impeding the progress of the Work, at the request of the City Engineer, that Subcontractor must be permanently removed from the Project and its Work performed by Contractor's own forces or by a duly authorized, qualified Subcontractor. Contractor will be solely responsible for any costs or delays resulting from removal of a Subcontractor under this Section.

2.4 Coordination of Work.

(A) ***Concurrent Work.*** City reserves the right to perform or to have performed other work on or adjacent to the Project site while the Work is being performed. Contractor is responsible for coordinating its Work with other work being performed on or adjacent to the Project site, and must avoid hindering, delaying, or interfering with the work of other contractors and subcontractors. To the full extent permitted by law, Contractor must hold harmless and indemnify City, Design Professional, and Project Manager against any and all claims arising from or related to Contractor's avoidable, negligent, or willful hindrance of, delay to, or interference with the work of another contractor or subcontractor.

(B) ***Defects.*** Before proceeding with any portion of the Work affected by the construction or operations of others, Contractor must give the Project Manager prompt written notification of any defects Contractor discovers which will prevent the proper execution of the Work. Failure to give notice of any such known defects will be deemed acknowledgement by Contractor that the work of others is not defective and will not prevent the proper execution of the Work.

2.5 Submittals. Unless otherwise specified, Contractor must submit to Project Manager for review and approval, all schedules, Shop Drawings, samples, product data and similar submittals required by the Contract Documents, or upon request by the Project Manager. All submittals, including requests for information (RFIs) are subject to the provisions of this Section.

(A) ***General.*** Contractor is responsible for ensuring that its submittals are accurate and conform to the Contract Documents.

(B) ***Time and Manner of Submission.*** Contractor must ensure that its submittals are prepared and delivered in a manner consistent with the current approved schedule for the Work and within the applicable time specified elsewhere in the Contract Documents, or if no time is specified, in such time and sequence so as not to delay the performance of the Work or completion of the Project.

(C) ***Required Contents.*** Each submittal must include the Project name and contract number, Contractor's name and address, the name and address of any Subcontractor or supplier involved with the submittal, the date, and references to applicable Specification section(s) and/or drawing and detail number(s).

(D) ***Required Corrections.*** If corrections are required, Contractor must promptly make and submit any required corrections in full conformance with the requirements of this Section.

(E) ***Effect of Review and Approval.*** Review and approval of a submittal by the Design Professional will not relieve Contractor from complying with the requirements of the Contract Documents.

(F) ***Enforcement.*** Any Work performed or material used without prior approval of a required submittal will be performed at Contractor's risk, and Contractor may be required to bear the costs incident thereto, including the cost of removing and replacing such Work, repairs to other affected portions of the Work, and the cost of additional time or services required of the Design Professional, Project Manager, or Inspector.

(G) ***Excessive RFIs.*** RFIs will be considered excessive or unnecessary if the City Engineer determines that the explanation or response to the RFI is clearly and unambiguously discernable in the Contract Documents. The City's costs to review and respond to excessive or unnecessary RFIs may be deducted from payments otherwise due to the Contractor.

2.6 Material Samples.

(A) ***Engineer Approval.*** Before a material is delivered or incorporated into the Work, Contractor must obtain the City Engineer's approval of the material or source for the material, by submitting a sample a representative sample of the material. Samples must be submitted in the manner specified in Section 2.5, above, or as otherwise specified in the Contract Documents. Contractor is solely responsible for the cost to remove and replace materials that were used or installed without the City Engineer's prior written approval.

(B) ***Testing.*** If Contractor is required to provide material testing, the test results must be submitted to the City Engineer within five days of the testing at no charge to the City. The testing must be performed as specified in the Contract Documents, or if not specified, in accordance with nationally recognized trade standards.

Article 3 - Contract Documents

3.1 Interpretation of Contract Documents.

(A) ***Drawings and Specifications.*** The Drawings and Specifications included in the Contract Documents are complementary. If Work is shown on one but not on the other, Contractor must perform the Work as though fully described on both, consistent with the Contract Documents and reasonably inferable from them as being necessary to produce the indicated results. The Drawings and Specifications are deemed to include and require everything necessary and reasonably incidental to completion of the Work, whether or not particularly mentioned or shown. Contractor must perform all work and services and supply all things reasonably related to and inferable from the Contract Documents. In the event of a conflict between the Drawings and Specifications, the Specifications will control.

(B) ***Duty to Notify.*** If Contractor becomes aware of any ambiguity, discrepancy, omission, or error in the Drawings or Specifications, Contractor must immediately notify the Design Professional and request clarification of such, by submitting a

written request for information (RFI) in the manner specified by City. The Design Professional's clarifications or interpretations will be final and binding.

(C) ***Figures and Dimensions.*** Figures control over scaled dimensions.

(D) ***Technical or Trade Terms.*** Any terms that have well-known technical or trade meanings will be interpreted in accordance with those meanings, unless otherwise specifically defined in the Contract Documents.

(E) ***Measurements.*** Contractor must verify all relevant measurements at the Worksite before ordering any material or performing any Work, and will be responsible for the correctness of those measurements.

3.2 Order of Precedence. Information included in one Contract Document but not in another will not be considered a conflict or inconsistency. Unless otherwise specified in the *Special Conditions*, in case of any conflict or inconsistency among the Contract Documents, the following order of precedence will apply, beginning from highest to lowest:

(A) Change Orders;
(B) Addenda;
(C) Contract;
(D) Notice to Proceed;
(E) Notice of Award;
(F) Special Conditions;
(G) General Conditions;
(H) Payment and Performance Bonds;
(I) Specifications;
(J) Drawings;
(K) Contractor's Bid Proposal and attachments;
(L) Notice Inviting Bids;
(M) Instructions for Bidders;
(N) Brentwood Standard Plans and Specifications; and
(O) Any documents prepared by and on behalf of a third party, that were not prepared specifically for this Project, e.g., Caltrans Standard Specifications or Caltrans Special Provisions.

3.3 Caltrans Standard Specifications. Any reference to or incorporation of the Standard Specifications of the State of California, Department of Transportation ("Caltrans"), including "Standard Specifications," "Caltrans Specifications," "State Specifications," or "CSS" means the most current edition of Caltrans' Standard Specifications, unless otherwise specified ("Standard Specifications"), including the most current amendments as of the date that Contractor's bid was submitted for this Project. The following provisions apply to use of or reference to the Standard Specifications:

(A) ***Limitations.*** None of the "General Provisions" of the Standard Specifications, i.e., Sections 1 through 9, applies to these Contract Documents with the exception of any specific provisions, if any, which are expressly stated to apply to these Contract Documents.

(B) ***Conflicts or Inconsistencies.*** If there is a conflict or inconsistency between any provision in the Standard Specifications and a provision of these Contract Documents, as determined by the City Engineer, the provision in the Contract Documents will govern.

(C) ***Meanings.*** Terms used in the Standard Specifications are to be interpreted as follows:

(1) Any reference to the "Engineer" is deemed to mean the City Engineer.

(2) Any reference to the "Special Provisions" is deemed to mean the *Special Conditions*.

(3) Any reference to the "State" is deemed to mean the City.

3.4 For Reference Only. Contractor is responsible for the careful review of any document, study, or report appended to the Contract Documents solely for informational purposes and identified as "For Reference Only." Nothing in any document, study, or report so appended and identified is intended to supplement, alter, or void any provision of the Contract Documents. However, Contractor is advised that City or its representatives may be guided by information or recommendations included in such reference documents, particularly when making determinations as to the acceptability of proposed materials, methods, or changes in the Work. Contractor must promptly notify the City Engineer of any perceived or actual conflict between the Contract Documents and any document provided For Reference Only.

Article 4 - Bonds, Indemnity, and Insurance

4.1 Payment and Performance Bonds. Within ten days following issuance of the notice of award, Contractor is required to provide a payment bond and a performance bond, each in the penal sum of not less than 100% of the Contract Price, using the bond forms included with the Contract Documents.

(A) ***Surety.*** Each bond must be issued by a surety admitted in California. If an issuing surety cancels the bond or becomes insolvent, within seven days following written notice from City, Contractor must substitute a surety acceptable to City. If Contractor fails to substitute an acceptable surety within the specified time, City may, at its sole discretion, withhold payment from Contractor until the surety is replaced to City's satisfaction, or terminate the Contract for default.

4.2 Indemnity and Liability.

(A) ***Contractor's Indemnity Obligation.*** To the fullest extent permitted by law, Contractor must indemnify, defend, and hold harmless City, its agents and consultants, and Design Professional (individually, an "Indemnitee," and collectively the "Indemnitees") from and against any and all liability, loss, damage, claims, expenses (including, without limitation, attorney fees, expert witness fees, paralegal fees, and fees and costs of litigation or arbitration) (collectively, "Liability") of every nature arising out of or in connection with the operations of Contractor, its employees, Subcontractors, representatives, or agents, in bidding or performing the Work or its failure to comply with any of its obligations under the

Contract, except such Liability caused by the active negligence, sole negligence, or willful misconduct of an Indemnitee. This indemnity requirement applies to any Liability arising from alleged defects in the content or manner of submission of the Contractor's bid for the Contract. Contractor's failure or refusal to timely accept a tender of defense pursuant to this provision will be deemed a material breach of this Contract.

(B) ***Third Party Claims.*** City will timely notify Contractor upon receipt of any third-party claim relating to the Contract, as required by Public Contract Code Section 9201.

(C) ***No Personal Liability.*** No member of the City Council or any individual officer, employee or authorized agent of the City will be personally liable to Contractor or to any Subcontractor for any liability arising under this Contract.

4.3 Insurance. No later than ten days following issuance of the notice of award, Contractor is required to procure and provide proof of the insurance coverage required by this section in the form of certificates and endorsements. The required insurance must cover the activities of Contractor and its Subcontractors relating to or arising from the performance of the Work, and must remain in full force and effect at all times during the period covered by the Contract until the date of recordation of the notice of completion. All required insurance must be issued by a company licensed to do business in the State of California, and each such insurer must have an A.M. Best's financial strength rating of "A" or better and a financial size rating of "VIII" or better. If Contractor fails to provide any of the required coverage in full compliance with the requirements of the Contract Documents, City may, at its sole discretion, purchase such coverage at Contractor's expense and deduct the cost from payments due to Contractor, or terminate the Contract for default.

(A) ***Policies and Limits.*** The following insurance policies and limits are required for this Contract unless otherwise specified in the *Special Conditions*:

(1) *Commercial General Liability Insurance ("CGL"):* The CGL policy must be issued on an occurrence basis, written on a comprehensive general liability form, and must include coverage for liability arising from Contractor's or its Subcontractor's operations in the performance of the Work, including contractor's protected coverage, blanket contractual, completed operations, vehicle coverage and employer's non-ownership liability coverage, with limits of at least $5,000,000.00 per occurrence, and $10,000,000.00 aggregate. The CGL policy must name City as an additional insured for all liability arising out of the operations by or on behalf of the named insured, and must protect City, its officers, employees, and agents against any and all liability for personal injury, death, or property damage or destruction arising directly or indirectly in the performance of the Contract. The additional insured endorsement must be provided using ISO form CG 20 10 11 85 alone, or both forms CG 20 10 10 01 <u>and</u> CG 20 37 10 01. The CGL coverage may be arranged under a single policy for the full limits required or by a combination of underlying policies with the balance provided by excess or umbrella policies, provided each such policy complies with the requirements set forth herein.

(2) *Builder's Risk Insurance:* The Builder's Risk Insurance policy must be issued on occurrence basis, for all-risk coverage on a 100% completed value basis on the insurable portion of the Project for the benefit of City.

(3) *Workers' Compensation Insurance and Employer's Liability:* The policy must comply with the requirements of the California Workers' Compensation Insurance and Safety Act, with of at least $1,000,000.00. If Contractor is self-insured, Contractor must provide its Certificate of Permission to Self-Insure, duly authorized by the Department of Industrial Relations.

(4) *Automobile Liability.* The automobile liability policy must provide coverage of at least $1,000,000 combined single-limit per accident for bodily injury, death or property damage.

(B) ***Notice.*** Each certificate of insurance must state that the coverage afforded by the policy or policies will not be reduced, cancelled or allowed to expire without at least 30 days written notice to City, unless due to non-payment of premiums, in which case ten days written notice must be made to City.

(C) ***Waiver of Subrogation.*** Each required policy must include an endorsement providing that the carrier agrees to waive any right of subrogation it may have against City.

(D) ***Required Endorsements.*** The CGL Policy and the Builder's Risk Policy must include the following specific endorsements:

(1) The inclusion of more than one insured will not operate to impair the rights of one insured against another, and the coverages afforded will apply as though separate policies have been issued to each insured.

(2) The insurance provided by Contractor is primary and no insurance or self-insurance held or owned by City, its officers, officials, employees or volunteers may be called upon to contribute to a loss. Any insurance or self-insurance held or owned by City, its officers, officials, employees and volunteers is excess to Contractor's insurance and may not be called on to cover or contribute to any loss covered by Contractor's insurance.

(3) This policy does not exclude explosion, collapse, underground excavation hazard, or removal of lateral support.

(E) ***Subcontractors.*** Contractor must ensure that each Subcontractor is required to maintain the same insurance coverage required under this Section 4.3, with respect to its performance of Work on the Project, including those requirements related to the additional insureds and waiver of subrogation. Contractor must confirm that each Subcontractor has complied with these insurance requirements before the Subcontractor is permitted to begin Work on the Project. Upon request by the City, Contractor must provide certificates and endorsements submitted by each Subcontractor to prove compliance with this requirement. The insurance requirements for Subcontractors do not replace or limit the Contractor's insurance obligations.

(F) ***Deductibles and Self-Insured Retentions.*** Any deductibles or self-insured retentions that apply to the required insurance (collectively, "deductibles") are subject to approval by City, acting in its sole discretion, and must be declared by Contractor when it submits its certificates of insurance and endorsements pursuant to this Section 4.3. If City determines that the deductibles are unacceptably high, at City's option, Contractor must either reduce or eliminate the deductibles as they apply to City and all required additional insured, as stated in subsection 4.3(A)(1), above; or must provide a financial guarantee, to City's satisfaction, guaranteeing payment of losses and related investigation, claim administration and legal expenses.

4.4 Warranty Bond. As a condition precedent to Final Completion, Contractor must submit a warranty bond, using the form provided by City, to guarantee its Work as specified in Article 11, Completion and Warranty Procedures. The warranty bond must be issued by a surety admitted in California for 15% of the final Contract Price or as otherwise specified in the Contract Documents. If an issuing surety cancels the bond or becomes insolvent, within seven days following written notice from City, Contractor must substitute a surety acceptable to City.

Article 5 - Contract Time

5.1 Time is of the Essence. Time is of the essence in Contractor's performance and completion of the Work, and Contractor must diligently prosecute the Work and complete it within the Contract Time.

(A) ***General.*** Contractor must commence the Work on the date indicated in the notice to proceed, and must fully complete the Work, in strict compliance with all requirements of the Contract Documents, and within the Contract Time.

(B) ***Rate of Progress.*** Contractor and its Subcontractors must, at all times, provide workers, materials, and equipment sufficient to maintain the rate of progress necessary to ensure full completion of the Work within the Contract Time. If City determines that Contractor is failing to prosecute the Work at a sufficient rate of progress, City may, in its sole discretion, direct Contractor to provide additional workers, materials, or equipment, or to work additional hours or days without additional cost to City, in order to achieve a rate of progress satisfactory to City. If Contractor fails to comply with City's directive in this regard, City may, at Contractor's expense, separately contract for additional workers, materials, or equipment or use City's own forces to achieve the necessary rate of progress. Alternatively, City may terminate the Contract based on Contractor's default.

5.2 Schedule Requirements. All schedules must be prepared using standard scheduling software acceptable to Design Professional, and must provide schedules in electronic and paper form as requested.

(A) ***As-Planned (Baseline) Schedule.*** Within 15 calendar days following issuance of the notice of award (or as otherwise specified in the *Special Conditions*), Contractor must submit to City for review and approval an as-planned (baseline) schedule showing in detail how Contractor plans to perform and fully complete the Work within the Contract Time using critical path methodology. The as-planned schedule must include the work of all trades required for the Work, and must be

sufficiently comprehensive and detailed to enable progress to be monitored on a day-by-day basis. For each activity, the as-planned schedule must be dated, provided in the format specified in the Contract Documents or as required by the City Engineer, and must include, at a minimum, a description of the activity, the start and completion dates, and the duration.

(B) ***Progress Schedules.*** Contractor must submit an updated progress schedule and three-week look-ahead schedule, in the format specified by the City Engineer, for review and approval with each application for a progress payment. The progress schedule must show how the actual progress of the Work to date compared to the as-planned schedule, and must identify any actual or potential impacts to the critical path.

(C) ***Recovery Schedule.*** If City determines that the Work is more than one week behind schedule, within seven days following written notice of such determination, Contractor must submit a recovery schedule, showing how the Contractor intends to perform and complete the Work within the Contract Time, based on actual progress to date.

(D) ***Effect of Approval.*** Contractor and its Subcontractors must perform the Work in accordance with the most current approved schedule unless otherwise directed by City. City's approval of a schedule does not operate to extend the time for completion of the Work or any component of the Work, and will not affect City's right to assess liquidated damages for Contractor's unexcused delay in completing the Work within the Contract Time.

(E) ***Posting.*** Contractor must at all times maintain a copy of the most current approved progress or recovery schedule posted prominently in its on-site office.

(F) ***Reservation of Rights.*** City reserves the right to direct the sequence in which the Work must be performed or to make changes in the sequence of the Work in order to facilitate the performance of work by City or others, or to facilitate City's use of its property. The Contract Time or Contract Price may be adjusted to the extent such changes in sequence actually increase or decrease Contractor's time or cost to perform the Work.

(G) ***Authorized Working Days and Times.*** Contractor is limited to working Monday through Friday, excluding holidays observed by the City, starting no earlier than 7:00 a.m., and ending no later than 3:30 p.m., except as expressly provided in the *Special Conditions*, or as authorized in writing by City. City reserves the right to charge Contractor for additional costs incurred by City due to Work performed on days or during hours not expressly authorized in these Contract Documents, including reimbursement of costs incurred for inspection, testing, and construction management services. Contractor may not perform Work outside of the authorized Working Days and times without the prior written consent of the City Engineer. A request to perform Work outside of the authorized Working Days and times must be submitted in writing to the City Engineer at least two Working Days in advance. Contractor will be solely responsible for any resulting costs, including overtime inspection, testing or staking.

5.3 Delay and Extensions of Contract Time.

(A) ***Excusable Delay.*** The Contract Time may be extended if Contractor encounters an unavoidable delay in completing the Work within the Contract Time due to causes completely beyond Contractor's control, and which Contractor could not have avoided or mitigated through planning, foresight, and diligence ("Excusable Delay"). Grounds for Excusable Delay may include fire, earthquake, acts of terror or vandalism, epidemic, unforeseeable adverse government actions, unforeseeable actions of third parties, encountering unforeseeable hazardous materials, unforeseeable site conditions, suspension for convenience under Article 13, or unusually severe weather.

(B) ***Non-Excusable Delay****.* Excusable Delay does not include delay that is concurrent with non-Excusable Delay, and does not include delay caused by:

(1) Weather conditions which are normal for the location of the Project, as determined by reliable records, including monthly rainfall averages, for the preceding ten years;

(2) Contractor's failure to order equipment and materials sufficiently in advance of the time needed for timely completion of the Work;

(3) Contractor's failure to provide adequate notification to utility companies for connections or services necessary for the timely performance and completion of the Work;

(4) Foreseeable conditions Contractor could have ascertained from reasonably diligent inspection of the Worksite or review of the Contract Documents; or

(5) Contractor's financial inability to perform the Work, including insufficient funds to pay its Subcontractors or suppliers.

(C) ***Request for Extension of Contract Time.*** A request for an extension of time and associated delay costs must be submitted in writing to the Project Manager within ten calendar days of the date the delay is first encountered, even if the duration of the delay is not yet known at that time, or will be deemed waived. In addition to complying with the requirements of this Article 5, the request must be submitted in compliance with the Change Order request procedures in Article 6, below. Strict compliance with these requirements is necessary to ensure that any delay or delay costs may be mitigated as soon as possible, and to facilitate cost-efficient administration of the Project and timely performance of the Work. Any request for an extension of time or delay costs that does not strictly comply with the requirements of Article 5 and Article 6 will be deemed waived.

(1) *Required Contents.* The request must include a detailed description of the cause(s) of the delay, and must also describe the measures that Contractor has taken to mitigate the delay and/or its effects, including efforts to mitigate the cost impact of the delay, e.g., by workforce management, change in sequencing, etc. If the delay is still ongoing at the time the request is submitted, the request should also include Contractor's plan for continued mitigation of the delay or its effects.

(2) *Delay Days and Costs.* The request must specify the number of days of Excusable Delay claimed, or provide a realistic estimate if the duration of the delay is not yet known. The request must specify the amount of any delay-related costs that are claimed, or provide a realistic estimate if the amount is not yet known. Any estimate of delay duration or cost must be updated in writing and submitted with all required supporting documentation as soon as the actual time and cost is known.

(3) *Supporting Documentation.* The request must also include any and all supporting documentation necessary to evidence the delay and its actual impacts, including schedule and cost impacts, including a time impact analysis using critical path methodology, and demonstrating unavoidable delay to Final Completion. The time impact analysis must be submitted in a form or format acceptable to City.

(4) *Burden of Proof.* Contractor has the burden of proving 1) that the delay was an Excusable Delay, as defined above, 2) that Contractor has made reasonable efforts to mitigate the delay and its schedule and cost impacts, 3) that the delay will unavoidably result in delaying Final Completion, and 4) that any delay costs claimed by Contractor were actually incurred and were reasonable under the circumstances.

(5) *Recoverable Costs.* If Contractor is granted an extension of time for Excusable Delay, recompense for delay costs shall be limited to actual, direct, reasonable, and substantiated costs, and will not include home office overhead, or markup for overhead and profit.

(6) *Legal Compliance.* Nothing in this provision is intended to require the waiver, alteration, or limitation of the applicability of Public Contract Code Section 7102.

(7) *No Waiver.* Any grant of an extension of time or delay costs due to an Excusable Delay will not operate as a waiver of City's right to assess liquidated damages for unexcused delay.

(8) *Dispute Resolution.* In the event of a dispute over entitlement to an extension of time or delay costs, Contractor may not stop working pending resolution of the dispute, but must continue to comply with its duty to diligently prosecute the performance and timely completion of the Work. Contractor's sole recourse for an unresolved dispute based on City's rejection of a Change Order request for an extension of time or delay costs is to comply with the Dispute Resolution provisions set forth in Article 12, below.

5.4 Liquidated Damages. It is expressly understood that if Final Completion is not achieved within the Contract Time, City will suffer damages which are difficult to determine and accurately specify. Pursuant to Public Contract Code section 7203, if Contractor fails to achieve Final Completion within the Contract Time, City will charge Contractor in the amount specified in the Contract for each day that Final Completion is delayed beyond the Contract Time, as liquidated damages and not as a penalty.

(A) ***Liquidated Damages.*** Liquidated damages will not be assessed for any Excusable Delay, as set forth above.

(B) ***Milestones.*** Liquidated damages will also be separately assessed for failure to meet milestones specified elsewhere in the Contract Documents.

(C) ***Setoff.*** City is entitled to set off the amount of liquidated damages assessed against any payments otherwise due to Contractor, including setoff against release of retention. If there are insufficient Contract funds remaining to cover the full amount of liquidated damages assessed, City is entitled to recover the balance from Contractor or its Performance Bond surety.

(D) ***Occupancy or Use.*** Occupancy or use of the Project in whole or in part prior to Final Completion does not constitute City's acceptance of the Project and will not operate as a waiver of City's right to assess liquidated damages for Contractor's unexcused delay in achieving Final Completion.

Article 6 - Contract Modification

6.1 Changes in Work. City reserves the right to make changes in the Work without invalidating the Contract. City may direct or Contractor may request changes in the Work, and any such changes will be formalized in a Change Order, which may include commensurate changes in the Contract Price or Contract Time as applicable. Contractor must promptly comply with City-directed changes in the Work in accordance with the intent of the original Contract Documents, even if Contractor and City have not yet reached agreement as to adjustments to the Contract Price or Contract Time.

(A) ***City-Directed Change.*** In the event of a dispute over entitlement to or the amount of a change in Contract Time or a change in Contract Price related to an City-directed change, Contractor must perform the Work as directed and may not delay its work or cease work pending resolution of the dispute, but must continue to comply with its duty to diligently prosecute the performance and timely completion of the Work, including the Work in dispute.

(B) ***Contractor's Obligations.*** In the event that City and Contractor dispute whether a portion or portions of the Work are already required by the Contract Documents as opposed to changed or extra Work, Contractor must perform the Work as directed and may not delay its Work or cease Work pending resolution of the dispute, but must continue to comply with its duty to diligently prosecute the performance and timely completion of the Work, including the Work in dispute.

(C) ***Remedy for Non-Compliance.*** Contractor's failure to promptly comply with a City-directed change is deemed a material breach of the Contract, and in addition to all other remedies available to it, City may, at its sole discretion, hire another contractor or use its own forces to complete the disputed Work at Contractor's sole expense, and may deduct the cost from the Contract Price.

(D) ***Dispute Resolution.*** Contractor's sole recourse for an unresolved dispute related to changes in the Work is to comply with the dispute resolution provisions set forth in Article 12, below.

6.2 Contractor Change Order Requests. Contractor must submit a request or proposal for a change in the Work or a change in the Contract Price or Contract Time as a written Change Order request or proposal.

(A) ***Time for Submission.*** Any request for a change in the Contract Price must be submitted in writing to the Project Manager within ten calendar days of the date that Contractor first encounters the circumstances, information or conditions giving rise to the Change Order request, even if the total amount of the requested change in the Contract Price or impact on the Contract Time is not yet known at that time.

(B) ***Required Contents.*** Any Change Order request or proposal submitted by Contractor must include a complete breakdown of actual or estimated costs and credits, and must itemize labor, materials, equipment, taxes, insurance, and subcontract amounts. Any estimated cost must be updated in writing as soon as the actual amount is known.

(C) ***Required Documentation.*** All claimed costs must be fully documented, and any related request for an extension of time or delay-related costs must be included at that time and in compliance with the requirements of Article 5 of the *General Conditions*.

(D) ***Required Form.*** Contractor must use City's form(s) for submitting all Change Order requests or proposals, unless otherwise specified by City.

(E) ***Certification.*** All Change Order requests must be signed by Contractor and must include the following certification:

> "The undersigned Contractor certifies under penalty of perjury that its statements and representations in this Change Order request are true and correct. Contractor warrants that this Change Order request is comprehensive and complete, and agrees that any costs, expenses, or time extension request not included herein will be deemed waived. Contractor understands that submission of claims which have no basis in fact or which Contractor knows to be false may violate the False Claims Act, as set forth in Government Code Sections 12650 et seq."

(F) ***Effective.*** A Change Order is not effective until it is approved by the City Council or the City Council's authorized delegee.

6.3 Adjustments to Contract Price. The amount of any increase or decrease to the Contract Price will be determined based on one of the following methods in the order provided:

(A) ***Unit Pricing.*** Amounts previously provided by Contractor in the form of unit prices, either in a bid schedule or schedule of values, will apply first if unit pricing has previously been provided in Contractor's accepted bid schedule or schedule of values for the affected Work.

(B) ***Lump Sum.*** A mutually agreed upon lump sum.

(C) ***Time and Materials.*** On a time and materials basis, which may include a not-to-exceed limit, calculated as the total of the following sums:

(1) All direct labor costs plus 15% for overhead and profit;

(2) All direct material costs, including sales tax, plus 15% for overhead and profit;

(3) All direct plant and equipment rental costs, plus 15% for overhead and profit;

(4) All direct subcontract costs plus 10% for overhead and profit; and

(5) Increased bond or insurance premium costs computed at 1.5% of total of the previous four sums.

6.4 Unilateral Change Order. If City disagrees with the amount of compensation or extension of time that Contractor has requested, City may elect to issue a unilateral Change Order, directing performance of the Work, and authorizing a change in the Contract Price or Contract Time in the amount City believes is merited. Contractor's sole recourse to dispute the terms of a unilateral Change Order is to submit a timely Claim pursuant to Article 12, below.

6.5 Non-Compliance Deemed Waiver. Contractor waives its entitlement to any increase in the Contract Price or Contract Time if Contractor fails to full comply with the provisions of this Article. Contractor will not be paid for unauthorized extra work.

Article 7 - General Construction Provisions

7.1 Permits and Taxes.

(A) ***General.*** Contractor must obtain and pay for any and all permits, fees, or licenses required to perform the Work, unless otherwise indicated in the Contract Documents. Contractor must cooperate with and provide notifications to government agencies with jurisdiction over the Project, as may be required. Contractor must provide City with copies of all notices, permits, licenses, and renewals required for the Work.

(B) ***Federal Excise Tax.*** Contractor must pay for all taxes on labor, material and equipment, except Federal Excise Tax to the extent that City is exempt from Federal Excise Tax.

7.2 Temporary Facilities. Contractor must provide, at Contractor's sole expense, any and all temporary facilities, including onsite office, sanitary facilities, storage, scaffolds, barricades, walkways, and any other temporary structure required to safely perform the Work along with any utility services incidental thereto.

(A) ***Standards.*** Such structures must be safe and adequate for the intended use, and installed and maintained in accordance with all applicable federal, state, and local laws, codes, and regulations.

(B) ***Removal and Repair.*** Contractor must promptly remove all such temporary facilities when they are no longer needed or upon completion of the Work,

whichever comes first. Contractor must promptly repair any damage to City's property caused by the installation, use, or removal of the temporary facilities, and must promptly restore the property to its original or intended condition.

(C) ***Additional Requirements.*** Additional provisions pertaining to temporary facilities may be included in the Specifications or *Special Conditions*.

7.3 Signs. Contractor must furnish and install all signs required by the Contract Documents or required by the City Engineer at Contractor's sole expense. No signs may be displayed on or about City's property, except signage which is required by law, by the City Engineer or by the Contract Documents, without City's prior written approval as to content, size, design, and location.

7.4 Protection of Work and Property.

(A) ***General.*** Contractor is responsible at all times for protecting the Work and materials and equipment to be incorporated into the Work from damage until the Notice of Completion has been recorded. Except as specifically authorized by City, Contractor must confine its operations to the area of the Project site indicated in the Drawings. Contractor is liable for any damage caused to City's real or personal property, the real or personal property of adjacent property owners, or the work or personal property of other contractors working for City.

(B) ***Unforeseen Conditions.*** If Contractor encounters facilities, utilities, or other unknown conditions not shown on or reasonably inferable from the Drawings or apparent from inspection of the Project site, Contractor must promptly notify the Project Manager, and must avoid taking any action which could cause damage to the facilities or utilities pending further direction from the Project Manager. If the Project Manager's subsequent direction to Contractor affects Contractor's cost or time to perform the Work, Contractor may submit a Change Order request as set forth in Article 6, above.

(C) ***Support; Adjacent Properties.*** Contractor must provide, install, and maintain all shoring, bracing, underpinning, etc., necessary to provide support to City's property and adjacent properties and improvements thereon. Contractor must provide notifications to adjacent property owners as may be required by law.

7.5 Noninterference. Contractor must take reasonable measures to avoid interfering with City's use of its property at or adjacent to the Project site, including use of roadways, entrances, parking areas, walkways, and structures. Contractor must provide written notification to the City Engineer and to the City's Fire and Police Departments at least two Working Days before closing any lane or otherwise obstructing access by emergency vehicles to any area.

7.6 Materials and Equipment.

(A) ***General.*** Unless otherwise specified, all materials and equipment required for the Work must be new and of the best grade for the intended purpose, and furnished in sufficient quantities to ensure the proper and expeditious performance of the Work. Unless otherwise specified, all materials and equipment required for the Work are deemed to include all components required for complete installation and intended

operation, and must be installed in accordance with the manufacturer's recommendation. Contractor is responsible for all shipping, handling, and storage costs associated with the materials and equipment required for the Work, and is responsible for protecting the Work and all of the required materials, supplies, tools and equipment at Contractor's sole cost until City accepts the Project.

(B) ***City-Provided.*** If the Work includes installation of materials or equipment to be provided by City, Contractor is solely responsible for the proper examination, handling, storage, and installation of such items in accordance with the Contract Documents. Contractor must promptly notify City of any defects discovered in City-provided materials or equipment. Contractor is solely responsible for any loss of or damage to such items which occurs while the items are in Contractor's custody and control, the cost of which may be offset from the Contract Price and deducted from any payment(s) due to Contractor.

(C) ***Intellectual Property Rights.*** Contractor must, at its sole expense, obtain any authorization required for use of patented or copyright protected materials, equipment, devices or processes that are incorporated into the Work. Contractor's indemnity obligation in Article 4, applies to any claimed violation of intellectual property rights in violation of this provision.

7.7 Substitutions.

(A) ***"Or Equal."*** Any specification designating a material, product, thing, or service by specific brand or trade name, followed by the words "or equal," is intended only to indicate quality and type of item desired, and Contractor may request use of any equal material, product, thing, or service.

(B) ***Request for Substitution.*** A request for substitution must be submitted to the Project Manager for approval within the applicable time period provided in the Contract Documents. If no time period is specified, the substitution request may be submitted any time within 35 days after the date of award of the Contract, or sufficiently in advance of the time needed to avoid delay of the Work, whichever is earlier.

(C) ***Substantiation.*** All data substantiating the proposed substitute as an "equal" item must be submitted with the written request for substitution. Contractor's failure to timely provide necessary substantiation is ground for rejection of the proposed substitution, without further review.

(D) ***Burden of Proving Equality.*** Contractor has the burden of proving the equality of the proposed substitution. The City Engineer has sole discretion to determine whether a proposed substitution is "equal," and the City Engineer's determination is final.

(E) ***Approval or Rejection.*** If the proposed substitution is approved, Contractor is solely responsible for any additional costs associated with the substituted item(s). If the proposed substitution is rejected, Contractor must, without delay, install the item specified.

(F) ***Contractor's Obligations.*** The City Engineer's review of a proposed substitution will not relieve Contractor from any of its obligations under the Contract Documents. In the event Contractor makes an unauthorized substitution, Contractor will be solely responsible for all resulting cost impacts, including the cost of removal and replacement and the impact to other design elements.

7.8 Testing and Inspection.

(A) ***General.*** All materials, equipment, and workmanship used in the Work are subject to inspection by Inspector at all times and locations during construction and/or fabrication. All manufacturers' application or installation instructions must be provided to the Inspector at least ten days prior to the first such application or installation. Contractor must, at all times, make the Work available for inspection.

(B) ***Scheduling and Notification.*** Contractor must schedule all tests required by the Contract Documents in time to avoid any delay to the progress of the Work. Contractor must provide timely notice to all necessary parties as specified in the Contract Documents.

(C) ***Responsibility for Costs.*** City will bear the initial cost of testing to be performed by independent testing consultants retained by City, subject to the following exceptions:

(1) Contractor will be responsible for the costs of any subsequent tests which are required to substantiate compliance with the Contract Documents, and any associated remediation costs.

(2) Contractor will be responsible for inspection costs, at City's established rates, for inspection time lost because the Work is not ready or Contractor fails to appear for a scheduled inspection.

(3) In addition, if any portion of the Work which is subject to testing is covered or concealed by Contractor prior to testing, Contractor will bear the cost of making that portion of the Work available for the testing required by the Contract Documents, and any associated repair or remediation costs.

(D) ***Contractor's Obligations.*** Any Work that fails to comply with the requirements of the Contract Documents must be promptly repaired, replaced, or corrected by Contractor, at Contractor's sole expense, even if that Work was previously inspected or included in a progress payment. Contractor is solely responsible for any delay occasioned by remediation of noncompliant Work. Inspection of the Work does not in any way relieve Contractor of its obligations to perform the Work as specified.

(E) ***Distant Locations.*** If required off-site testing or inspection must be conducted at a location more than 100 miles from the Project site, Contractor is solely responsible for the additional travel costs required for testing and/or inspection at such locations.

(F) ***Final Inspection.*** The provisions of this Section 7.8 apply to final inspection under Article 11, Completion and Warranty Provisions.

7.9 Clean up. Contractor must regularly remove debris and waste materials and maintain the Worksite in clean and neat condition.

(A) ***General.*** Prior to discontinuing work in an area, Contractor must clean the area and remove all rubbish along with its construction equipment, tools, machinery, waste and surplus materials. Contractor must, at all times, minimize and confine dust and debris resulting from construction activities.

(B) ***Completion.*** At the completion of the Work, Contractor must remove from the Worksite all of its equipment, tools, surplus materials, waste materials and debris. Before demobilizing from the Worksite, Contractor must ensure that all surfaces are cleaned, sealed, waxed, or finished as applicable, and that all marks, stains, paint splatters, and the like have been properly removed from the completed Work and the surrounding areas.

(C) ***Non-Compliance.*** If Contractor fails to commence compliance with its cleanup obligations within two business days following written notification from City or its representative, City may undertake appropriate cleanup measures without further notice and the cost will be deducted from any amounts due or to become due the Contractor.

7.10 Instructions and Manuals. Contractor must provide three copies each of all instructions and manuals required by the Contract Documents, unless otherwise specified. These must be complete as to drawings, details, parts lists, performance data, and other information that may be required for City to easily maintain and service the materials and equipment installed for this Project.

(A) ***Submittal Requirements.*** All manufacturers' application or installation instructions must be provided to the Inspector at least ten days prior to the first such application. The instructions and manuals, along with any required guarantees, must be delivered to the Design Professional for review.

(B) ***Instruction of Personnel.*** Contractor or its Subcontractors must instruct City's personnel in the operation and maintenance of any complex equipment as a condition precedent to Final Completion, if required in the Contract Documents.

7.11 As-built Drawings. Contractor and its Subcontractors must maintain on the Worksite a separate complete set of the Drawings which will be used solely for the purpose of recording changes made in any portion of the Work in order to create accurate record drawings at the end of the Project.

(A) ***Duty to Update.*** The as-built drawings must be updated as changes occur, on a daily basis if necessary. Progress payments may be delayed, in whole or in part, until the as-built drawings are brought up to date to the satisfaction of the City Engineer. Actual locations to scale must be identified on the as-built drawings for all runs of mechanical and electrical work, including all site utilities, etc., installed underground, in walls, floors, or otherwise concealed. Deviations from the original Drawings must be shown in detail. The location of all main runs, whether piping, conduit, ductwork, drain lines, etc., must be shown by dimension and elevation.

(B) ***Final Completion.*** Contractor must verify that all changes in the Work are depicted in the as-built drawings and must deliver the complete set of as-built drawings to the City Engineer and Design Professional for review and approval as a condition precedent to Final Completion.

7.12 Existing Utilities. As required by Government Code Section 4215, if, during the performance of the Work, Contractor discovers utility facilities not identified by City in the Contract Documents, Contractor must immediately provide written notice to City and the utility. City assumes responsibility for the timely removal, relocation, or protection of existing main or trunkline utility facilities located on the Project site, if those utilities are not identified in the Contract Documents. Contractor will be compensated in accordance with the provisions of the Contract Documents for the costs of locating, repairing damage not due to Contractor's failure to exercise reasonable care, and removing or relocating such utility facilities not indicated in the Drawings or Specifications with reasonable accuracy, and for equipment on the Project necessarily idled during such work. Contractor will not be assessed liquidated damages for delay in completion of the Work, to the extent such delay was caused by City's failure to provide for removal or relocation of the utility facilities.

7.13 Notice of Excavation. Government Code Section 4216.2, requires that except in an emergency, Contractor must contact the appropriate regional notification center, or Underground Services Alert at 800-642-2444 (for Northern California), at least two Working Days, but not more than 14 calendar days before starting any excavation if the excavation will be conducted in an area that is known, or reasonably should be known, to contain subsurface installations, and if practical, Contractor must delineate with white paint or other suitable markings the area to be excavated.

7.14 Trenching and Excavations.

(A) ***Duty to Notify.*** Contractor must promptly, and before the following conditions are disturbed, provide written notice to City if the Contractor finds any of the following conditions:

(1) Material that Contractor believes may be a hazardous waste, as defined in Section 25117 of the Health and Safety Code, that is required to be removed to a Class I, Class II, or Class III disposal site in accordance with the provisions of existing law;

(2) Subsurface or latent physical conditions at the Worksite differing from those indicated by information about the Worksite made available to bidders prior to the deadline for submitting bids; or

(3) Unknown physical conditions at the Worksite of any unusual nature, materially different from those ordinarily encountered and generally recognized as inherent in work of the character required by the Contract Documents.

(B) ***City Investigation.*** City will promptly investigate the conditions and if City finds that the conditions do materially differ or do involve hazardous waste, and cause a decrease or increase in Contractor's cost of, or the time required for, performance of any part of the Work, City will issue a Change Order.

(C) ***Disputes.*** In the event that a dispute arises between the City and the Contractor regarding any of the conditions specified in subsection (A) above, Contractor will not be excused from any scheduled completion date provided for in the Contract Documents, but must proceed with all Work to be performed under the Contract. Contractor will retain any and all rights provided either by the Contract or by law which pertain to the resolution of disputes between Contractor and City.

7.15 Trenching of Five Feet or More. As required by Labor Code Section 6705, if the Contract Price exceeds $25,000 and the Work includes the excavation of any trench or trenches of five feet or more in depth, a detailed plan must be submitted to City or its civil or structural engineer, for acceptance in advance of the excavation. The detailed plan must show the design of shoring, bracing, sloping, or other provisions to be made for worker protection from the hazard of caving ground during the excavation. If the plan varies from the shoring system standards, it must be prepared by a registered civil or structural engineer. Use of a shoring, sloping, or protective system less effective than that required by the Construction Safety Orders is prohibited.

7.16 New Utility Connections. City will pay connection charges and meter costs for new permanent utilities required by the Contract Documents, if any. Contractor must notify City sufficiently in advance of the time needed to request service from each utility provider so that connections and services are initiated in accordance with the Project schedule.

7.17 Lines and Grades. Contractor is required to use any benchmark provided by City Engineer. Unless otherwise specified in the Contract Documents, Contractor must provide all lines and grades required to execute the Work based on the benchmark(s) provided by the City Engineer.

(A) ***Benchmarks.*** If Contractor needs to have a benchmark staked or marked, it must submit written request to the City Engineer at least three Working Days in advance or sooner if necessary to avoid delay in performing the Work. In order to avoid inefficiencies created by requesting multiple Site visits by the City Engineer for this purpose, the request must be based upon a minimum of four hours of time for the City Engineer to provide the requested staking and marking. If Contractor submits a request for less than the minimum four hours, based on inefficient planning, Contractor will be billed the difference in cost between the four hour minimum and the City Engineer's actual time to stake or mark.

(B) ***Clear Area.*** Contractor is responsible for having the area(s) to be staked or marked by the City Engineer cleared in advance of any obstructions. If an area to be staked or marked is not adequately cleared by the time the City Engineer arrives, Contractor will be responsible for City Engineer's standby time, or for any ensuing delay if the City Engineer needs to reschedule the staking or marking to allow Contractor time to clear remaining obstructions.

(C) ***Duty to Protect.*** Contractor is responsible for protecting stakes and marks set by the City Engineer against damage or displacement. If the stakes or marks are damaged or displaced, Contractor must request that the City Engineer reset the stakes or marks, providing at least three Working Days' notice. Contractor may be

backcharged for the City's cost to reset the stakes or marks if the resetting is required because of Contractor's failure to take appropriate measures to protect the stakes or marks.

7.18 Historic or Archeological Items.

(A) ***Contractor's Obligations.*** Contractor must ensure that all persons performing Work at the Project site are required to immediately notify the Inspector or Project Manager, upon discovery of any potential historic or archeological items, including historic or prehistoric ruins, burial grounds, archaeological or vertebrate paleontological site, including fossilized footprints or other archeological, paleontological or historical feature on the Project site (collectively, "Historic or Archeological Items").

(B) ***Discovery; Cessation of Work.*** Upon discovery of any potential Historic or Archeological Items, Work must be stopped within an 85-foot radius of the find and may not resume until authorized in writing by the City Engineer. If required by City, Contractor must assist in protecting or recovering the Historic or Archeological Items, any such assistance to be compensated as extra work on a time and materials basis under Article 6, Contract Modification. Any suspension of Work required due to discovery of Historic or Archeological Items will be treated as a suspension for convenience under Article 13.

7.19 Environmental Control. Contractor must not pollute any drainage course or its tributary inlets with fuels, oils, bitumens, acids, insecticides, herbicides or other harmful materials. Contractor and its Subcontractors shall at all times in the performance of the Work comply with all applicable federal, state, and local laws and regulations concerning pollution of waterways.

(A) ***Stormwater Permit.*** Contractor must comply with all applicable conditions of the State Water Resources Control Board national Pollutant Discharge Elimination System General Permit for Waste Discharge Requirements for Discharges of Stormwater Runoff Associated with Construction Activity ("Stormwater Permit").

(B) ***Contractor's Obligations.*** If required for the Work, a copy of the Stormwater Permit is on file in City's principal administrative offices, and the Contractor must comply with the same without adjustment of the Contract Price or the Contract Time. The Contractor must timely and completely submit required reports and monitoring information required by the conditions of the Stormwater Permit, the Contractor must comply with all other applicable state, municipal or regional laws, ordinances, rules or regulations governing discharge of stormwater, including applicable municipal stormwater management programs.

7.20 Photographic Documentation. Contractor is responsible for digital photographic and video documentation of the Project, beginning with photographs of the entire Worksite in its pre-construction condition before starting Work on the Project, and continuing to document the progress of the Work on a daily basis, or as otherwise directed by the City Engineer. Contractor must provide photographic and video documentation to the City on disc(s) with its payment requests, showing Work performed during the period covered by the payment request, or upon request by the City Engineer.

Article 8 - Payment

8.1 Schedule of Values. Prior to submitting its first application for payment, Contractor must prepare and submit to the Project Manager a schedule of values apportioned to the various divisions and phases of the Work. Each line item contained in the schedule of values must be assigned a value such that the total of all items equals the Contract Price. The items must be sufficiently detailed to enable accurate evaluation of the percentage of completion claimed in each application for payment, and the assigned value consistent with any itemized or unit pricing submitted with Contractor's bid.

8.2 Progress Payments. Following the last day of each month, or as otherwise required by the *Special Conditions* or *Specifications*, Contractor will submit to the Project Manager for approval, a monthly application for payment for Work performed during the preceding month based on the estimated value of the Work performed during that preceding month.

(A) ***Application for Payment.***

(1) Each application for payment must be itemized to include labor, materials, and equipment incorporated into the Work, and materials and equipment delivered to the Worksite, as well as authorized and approved Change Orders. Each pay application must be supported by the Contractor's schedule of values and any other substantiating data required by the Contract Documents.

(2) Each application for payment must be accompanied by an executed Conditional Waiver And Release Upon Progress Payment, using the form specified in Civil Code Section 8132 for each Subcontractor that performed Work during the period covered by that application.

(B) ***Payment of Undisputed Amounts.***

(1) City will pay the undisputed amount due, as certified by the Design Professional, within thirty (30) days after Contractor has submitted a complete and accurate payment application, subject to Public Contract Code Section 20104.50. City will deduct a percentage from each progress payment as retention, as set forth in Section 8.5, below, and may deduct additional amounts as set forth in Section 8.3, below.

(2) Within 45 days after receipt of each payment from the City, Contractor must submit an executed Unconditional Waiver And Release Upon Progress Payment, using the form specified in Civil Code Section 8134, from each Subcontractor that has received a progress payment from Contractor following Contractor's receipt of payment from the City.

8.3 Adjustment of Payment Application. City may adjust or reject a payment application, including application for Final Payment, in whole or in part, based upon any of the circumstances listed below. Contractor will be notified in writing of the basis for the adjustment, and will be promptly paid once the basis for that adjustment has been remedied and no longer exists.

(A) Contractor's unexcused failure to perform the Work as required by the Contract Documents, including correction or completion of punch list items;

(B) Loss or damage caused by Contractor or its Subcontractor(s) arising out of or relating to performance of the Work;

(C) Contractor's failure to pay its Subcontractors and suppliers when payment is due;

(D) Failure to timely correct rejected, nonconforming, or defective Work;

(E) Unexcused delay in performance of the Work;

(F) Any unreleased stop notice, retained as 125% of the amount claimed;

(G) Failure to submit any required schedule or schedule update in the manner and within the time specified in the Contract Documents:

(H) Failure to maintain or submit as-built documents in the manner and within the time specified in the Contract Documents;

(I) Work performed without approved Shop Drawings, when approved Shop Drawings are required before proceeding with the Work;

(J) Contractor's payroll records are delinquent or inadequate; and

(K) Any other costs or charges that may be offset against payments due, as provided in the Contract Documents, including liquidated damages.

8.4 Acceptance of Work. Neither City's payment of progress payments nor its partial or full use or occupancy of the Project constitutes acceptance of any part of the Work.

8.5 Retention. City will retain five percent of the amount due on each progress payment, or the percentage stated in the *Notice Inviting Bids*, whichever is greater, as retention to ensure full and satisfactory performance of the Work.

(A) ***Substitution of Securities.*** As provided by Public Contract Code Section 22300, Contractor may request in writing that it be allowed, at its sole expense, to substitute securities for the retention withheld by City. Any escrow agreement entered into pursuant to this provision will fully comply with Public Contract Code Section 22300, and will be subject to approval as to form by City's legal counsel.

(B) ***Release of Undisputed Retention.*** All undisputed retention, less any amounts that may be assessed as liquidated damages, retained for stop notices, or otherwise withheld under Section 8.3 or 8.6 will be released as Final Payment to Contractor no sooner than 35 days following recordation of the notice of completion, and no later than 60 days following acceptance of the Project by the City Council or authorized designee, or, if the Project has not been accepted, no later than 60 days after the Project is otherwise considered complete under Public Contract Code Section 7107(c).

8.6 **Setoff.** City is entitled to set off any amounts due from Contractor against any payments due to Contractor. City's entitlement to setoff includes progress payments as well as Final Payment and release of retention.

8.7 **Payment to Subcontractors and Suppliers.** Each month, Contractor must promptly pay each Subcontractor and supplier the value of the portion of labor, materials, and equipment incorporated into the Work or delivered to the Worksite by the Subcontractor or supplier during the preceding month. Such payments must be made in accordance with the requirements of the law, and those of the Contract Documents and applicable subcontract or supplier contract.

(A) ***Withholding for Stop Notice.*** City will withhold 125% of the amount claimed by an unreleased stop notice, a portion of which may be retained by City for the costs incurred in handling the stop notice claim, including attorneys' fees and costs, as authorized by law.

(B) ***Joint Checks.*** City reserves the right to issue joint checks made payable to the Contractor and its Subcontractors or suppliers. As a condition to release of payment by a joint check, the joint check payees may be required to execute a joint check agreement in a form provided or approved by City. The joint check payees will be jointly and severally responsible for the allocation and disbursement of funds paid by joint check. Payment by joint check will not be construed to create a contractual relationship between City and a Subcontractor or supplier of any tier beyond the scope of the joint check agreement.

8.8 **Final Payment.** Contractor's application for Final Payment must comply with the requirements for submitting an application for a progress payment as stated in Section 8.2, above. Corrections to previous progress payments, including adjustments to estimated quantities for unit priced items, may be included in the Final Payment. The date of Final Payment is deemed to be effective on the date that City acts to release retention as final payment to Contractor, or otherwise provides written notice to Contractor of Final Payment. If the amount due from Contractor to City exceeds the amount of Final Payment, City retains the right to recover the balance from Contractor or its sureties.

8.9 **Release of Claims.** City may, at any time, require that payment of the undisputed portion of any progress payment or Final Payment be contingent upon Contractor furnishing City with a written release of all claims against City arising from or related to the portion of Work covered by those undisputed amounts. Any disputed amounts may be specifically excluded from the release.

8.10 **Warranty of Title.** Contractor warrants that title to all work, materials, or equipment incorporated into the Work and included in a request for payment will pass over to City free of any claims, liens, or encumbrances upon payment to Contractor.

Article 9 - Labor Provisions

9.1 **Discrimination Prohibited.** Discrimination against any prospective or present employee engaged in the Work on grounds of race, color, ancestry, national origin,

ethnicity, religion, sex, sexual orientation, age, disability, or marital status is strictly prohibited. Contractor and its Subcontractors are required to comply with all applicable Federal and California laws including the California Fair Employment and Housing Act (Government Code Sections 12900 et seq.), Government Code Section 11135, and Labor Code Sections 1735, 1777.5, 1777.6, and 3077.5.

9.2 Labor Code Requirements.

(A) ***Eight Hour Day.*** Under Labor Code Section 1810, eight hours of labor constitute a legal day's work under this Contract.

(B) ***Penalty.*** Under Labor Code Section 1813, Contractor will forfeit to City as a penalty, the sum of $25.00 for each day during which a worker employed by Contractor or any Subcontractor is required or permitted to work more than eight hours in any one calendar day or more than 40 hours per calendar week, except if such workers are paid overtime under Labor Code Section 1815.

(C) ***Apprentices.*** Contractor is responsible for compliance with the requirements governing employment and payment of apprentices, as set forth in Labor Code Section 1777.5, which is fully incorporated by reference.

(D) ***Notices.*** Under Labor Code Section 1771.4, Contractor is required to post all job site notices prescribed by law or regulation.

9.3 Prevailing Wages. Each worker performing Work under this Contract that is covered under Labor Code Section 1720 or 1720.9, including cleanup at the Project site, must be paid at a rate not less than the prevailing wage as defined in Sections 1771 and 1774 of the Labor Code. The prevailing wage rates are available online at http://www.dir.ca.gov/dlsr. Contractor must post a copy of the applicable prevailing rates at the Worksite.

(A) ***Penalties.*** Under Labor Code Section 1775, Contractor and any Subcontractor will forfeit to City as a penalty up to $200.00 for each calendar day, or portion a day, for each worker paid less than the applicable prevailing wage rate. Contractor must also pay each worker the difference between the applicable prevailing wage rate and the amount actually paid to that worker.

(B) **Federal Requirements.** If this Project is subject to Federal prevailing wage requirements in addition to California prevailing wage requirements, Contractor and its Subcontractors are required to pay the higher of the current applicable prevailing wage rates under federal law.

9.4 Payroll Records. Contractor must comply with the provisions of Labor Code Sections 1776 and 1812 and all implementing regulations, which are fully incorporated by this reference, including requirements for electronic submission of payroll records.

(A) ***Contractor and Subcontractor Obligations***. Contractor and each Subcontractor must keep accurate payroll records, showing the name, address, social security number, work classification, straight time and overtime hours worked each day and week, and the actual per diem wages paid to each journeyman, apprentice, worker, or other employee employed in connection with

the Work. Each payroll record must contain or be verified by a written declaration that it is made under penalty of perjury, stating both of the following:

(1) The information contained in the payroll record is true and correct.

(2) The Contractor or Subcontractor has complied with the requirements of Labor Code Sections 1771, 1811, and 1815 for any Work performed by its employees on the Project.

(B) ***Certified Record.*** A certified copy of an employee's payroll record must be made available for inspection or furnished to the employee or his or her authorized representative on request, to City, or to the Division of Labor Standards Enforcement, and the Division of Apprenticeship Standards of the Department of Industrial Relations, and as further provided by the Labor Code.

(C) ***Enforcement.*** Upon notice of noncompliance with Labor Code Section 1776, Contractor or Subcontractor has ten days in which to comply with requirements of this section. If Contractor or Subcontractor fails to do so within the ten day period, Contractor or Subcontractor will forfeit a penalty of $100.00 per day, or portion a day, for each worker for whom compliance is required, until strict compliance is achieved. Upon request by the Division of Apprenticeship Standards, or the Division of Labor Standards Enforcement, these penalties will be withheld from progress payments then due.

9.5 Labor Compliance. Under Labor Code section 1771.4, the Contract for this Project, if awarded on or after January 15, 2015, is subject to compliance monitoring and enforcement by the California Department of Industrial Relations.

Article 10 - Safety Provisions

10.1 Safety Precautions and Programs. Contractor and its Subcontractors are fully responsible for safety precautions and programs, and for the safety of persons and property in the performance of the Work. Contractor and its Subcontractors must comply with all applicable safety laws, rules and regulations and seek to avoid injury, loss, or damage to persons or property by taking reasonable steps to protect its employees and other persons at the Worksite, materials and equipment stored on or off site, and property at or adjacent to the Worksite.

(A) ***Reporting Requirements.*** Contractor must immediately provide a written report to City of all recordable accidents and injuries occurring at the Worksite. If Contractor is required to file an accident report with a government agency, Contractor will provide a copy of the report to City.

(B) ***Legal Compliance.*** Contractor's safety program must comply with the applicable legal and regulatory requirements. Contractor must provide City with copies of all notices required by law or regulation.

(C) ***Contractor's Obligations.*** Any damage or loss caused by Contractor arising from the Work which is not insured under property insurance must be promptly remedied by Contractor.

(D) ***Remedies.*** If City determines, in its sole discretion, that any part of the Work or Worksite is unsafe, City may, without assuming responsibility for Contractor's safety program, require Contractor or its Subcontractor to cease performance of the Work or to take corrective measures to the City's satisfaction. If Contractor fails to promptly take the required corrective measures, City may perform them and deduct the cost from the Contract Price. Contractor agrees it is not entitled to submit a Claim for damages, for an increase in Contract Price, or for a change in Contract Time based on Contractor's compliance with the City's request for corrective measures pursuant to this provision.

10.2 Hazardous Materials. Unless otherwise specified, this Contract does not include the removal, handling, or disturbance of any asbestos or other Hazardous Materials. If Contractor encounters materials on the Worksite that Contractor reasonably believes to be asbestos or other Hazardous Materials, and the asbestos or other Hazardous Materials have not been rendered harmless, Contractor may continue Work in unaffected areas reasonably believed to be safe, but must immediately cease work on the area affected and report the condition to the City. No asbestos, asbestos-containing products or other Hazardous Materials may be used in performance of the Work.

10.3 Material Safety. Contractor must maintain Material Safety Data Sheets ("MSDS") at the Worksite, as required by law, for materials or substances used or consumed in the performance of the Work. The MSDS will be accessible and available to Contractor's employees, Subcontractors, and City.

(A) ***Contractor Obligations.*** Contractor is solely responsible for the proper delivery, handling, use, storage, removal, and disposal of all materials brought to the Worksite and/or used in the performance of the Work.

(B) ***Labeling.*** Contractor must ensure proper labeling on any material brought onto the Worksite so that any persons working with or in the vicinity of the material may be informed as to the identity of the material, any potential hazards, and requirements for proper handling, protections, and disposal.

Article 11 - Completion and Warranty Provisions

11.1 Final Completion.

(A) ***Final Inspection.*** When the Work required by this Contract is fully performed, Contractor must provide written notification to the Project Manager requesting final inspection. Based on this inspection, the Design Professional will prepare a punch list of items that are incomplete, incorrectly installed, or not operating as required by the Contract Documents. The omission of any such item from this punch list will not relieve the Contractor from fulfilling all requirements of the Contract Documents.

(B) ***Punch List.*** City will deliver the punch list to Contractor and will specify the time by which all of the punch list items must be completed or corrected. The punch list may include City's estimated cost to complete each punch list item if Contractor fails to do so within the specified time.

(C) ***Requirements for Final Completion.*** Final Completion will be achieved upon completion or correction of all punch list items, as verified by inspection, and upon satisfaction of all other Contract requirements, including any commissioning required under the Contract Documents, and submission of all final submittals, including a warranty bond as required under Section 4.4, instructions and manuals as required under Section 7.10, and as-built drawings as required under Section 7.11, all to City's satisfaction. Once Final Completion is achieved, and the Project has been formally accepted by City, City will file a notice of completion with the County Recorder.

(D) ***Final Payment.*** Final Payment and release of retention, less any sums withheld pursuant to the provisions of the Contract Documents, will not be made sooner than 35 days after recordation of the notice of completion. If Contractor fails to complete all of the punch list items within the specified time, City may elect to accept the Project and record the notice of completion, and withhold up to 150% of City's estimated cost to complete the remaining items from Final Payment.

11.2 Warranty.

(A) ***General.*** Contractor warrants that all materials and equipment will be new unless otherwise specified, of good quality, in conformance with the Contract Documents, and free from defective workmanship and materials. Contractor further warrants that the Work will be free from material defects not intrinsic in the design or materials required in the Contract Documents. At City's request, Contractor must furnish satisfactory evidence of the quality and type of materials and equipment furnished. Contractor's warranty does not extend to damage caused by normal wear and tear, or improper use or maintenance.

(B) ***Warranty Period.*** Contractor's warranty must guarantee its Work for a period of one year from the date of recordation of the notice of completion (the "Warranty Period"), except when a longer guarantee is provided by a supplier or manufacturer or is required by the *Specifications* or *Special Conditions*. Contractor must obtain from its Subcontractors, suppliers and manufacturers any special or extended warranties required by the Contract Documents.

(C) ***Warranty Documents.*** As a condition precedent to acceptance, Contractor must supply City with all warranty and guarantee documents relevant to equipment and materials incorporated into the Work and guaranteed by their suppliers or manufacturers.

(D) ***Subcontractors.*** The warranty obligations in the Contract Documents apply to Work performed by Contractor and its Subcontractors, and Contractor expressly agrees to act as co-guarantor of such Work.

(E) ***Contractor's Obligations.*** Upon written notice from City to Contractor of any defect in the Work discovered during the Warranty Period, Contractor or its responsible Subcontractor must promptly correct the defective Work at its own cost. Contractor's obligation to correct defects discovered during the Warranty Period will continue past the expiration of the Warranty Period as to any defects in Work for which Contractor was notified prior to expiration of the Warranty Period.

(F) ***City's Remedies.*** If Contractor and/or its responsible Subcontractor fails to correct defective Work within ten days following notice by City, or sooner, if required by the circumstances, Contractor expressly agrees that City may correct the defects to conform with Contract Documents at Contractor's sole expense, and Contractor agrees to reimburse City for its direct costs, plus an additional 25% as compensation for the City's administrative costs, within 30 days following City's submission of a demand for payment pursuant to this provision. If City is required to initiate legal action to compel Contractor's compliance with this provision, and City is the prevailing party in such action, Contractor is solely responsible for all of City's attorney's fees and legal costs expended to enforce Contractor's warranty obligations herein in addition to any and all costs incurred by City to correct the defective Work.

11.3 Use Prior to Final Completion. City reserves the right to occupy or make use of the Project, or any portions of the Project, prior to Final Completion if City has determined that the Project or portion of it is in a condition suitable for the proposed occupation or use, and that it is in its best interest to occupy or make use of the Project, or any portions of it, prior to Final Completion. City will notify Contractor in writing of its intent to occupy or make use of the Project or any portions of the Project, pursuant to this provision.

(A) ***Non-Waiver.*** Occupation or use prior to Final Completion will not operate as acceptance of the Work or any portion of it, nor will it operate as a waiver of any of City's rights or Contractor's duties pursuant to these Contract Documents, and will not affect nor bear on the determination of the time of substantial completion with respect to any statute of repose pertaining to the time for filing an action for construction defect.

(B) ***City's Responsibility.*** City will be responsible for the cost of maintenance and repairs due to normal wear and tear with respect to those portions of the Project that are being occupied or used before final completion. The Contract Price or the Contract Time may be adjusted pursuant to the applicable provisions of these Contract Documents if, and only to the extent that, any occupation or use under this Section actually adds to Contractor's cost or time to perform the Work.

11.4 Substantial Completion. For purposes of determining "substantial completion" with respect to any statute of repose pertaining to the time for filing an action for construction defect, "substantial completion" is deemed to mean the last date that Contractor or any Subcontractor performs Work on the Project prior to recordation of the Notice of Completion, except for warranty work performed under this Article.

Article 12 - Dispute Resolution

12.1 Claims. This Article applies to and provides the exclusive procedures for any Claim arising from or related to the Contract or performance of the Work.

(A) ***Definition.*** "Claim" means a separate demand by Contractor, submitted in writing, for change in the Contract Time or Contract Price that has previously been submitted to City in accordance with the requirements of the Contract Documents, and which has been rejected by City, in whole or in part.

(B) ***Limitations.*** A Claim may only include the portion of a previously rejected demand that remains in dispute between Contractor and City. With the exception of any dispute regarding the amount of money actually paid to Contractor as Final Payment, Contractor is not entitled to submit a Claim demanding a change in the Contract Time or the Contract Price, which has not previously been submitted to City in full compliance with Article 5 and Article 6, and subsequently rejected in whole or in part by City.

(C) ***Scope of Article.*** This Article is intended to provide the exclusive procedures for submission and resolution of Claims of any amount, and applies in addition to the provisions of Public Contract Code Sections 20104, et seq.

12.2 Claims Submission. The following requirements apply to any Claim subject to this Article:

(A) ***Substantiation.*** The Claim must be submitted to City in writing and must include all of the documents necessary to substantiate the Claim including the change order request that was rejected in whole or in part, and City's rejection. Any Claim for additional payment must include a complete, itemized breakdown of all labor, materials, taxes, insurance, and subcontract, or other costs. Substantiating documentation such as payroll records, receipts, invoices, or the like, must be submitted in support of each claimed cost. Any Claim for an extension of time or delay costs must be substantiated with schedule analysis and narrative depicting and explaining claimed time impacts.

(B) ***Certification.*** Each Claim must include the following certification, and must be executed by Contractor's authorized representative:

"The undersigned Contractor certifies under penalty of perjury that its statements and representations in this Claim are true and correct. Contractor warrants that this Claim is comprehensive and complete as to the matters in dispute, and agrees that any costs, expenses, or delay claim not included herein is deemed waived. Contractor understands that submission of a Claim which has no basis in fact or which Contractor knows to be false may violate the False Claims Act (Government Code Sections 12650 et seq.)."

(C) ***Submission Deadlines.***

(1) A Claim must be submitted within 15 days following the date that City notified Contractor in writing that a request for a change in the Contract Time or Contract Price, duly submitted in compliance with Article 5 and Article 6, has been rejected in whole or in part.

(2) With the exception of any dispute regarding the amount of Final Payment, any Claim must be filed on or before the date of Final Payment, or will be deemed waived.

(3) A Claim disputing the amount of Final Payment must be submitted within 15 days of the effective date of Final Payment, under Section 8.8, above.

(4) Strict compliance with these Claim submission deadlines is necessary to ensure that any dispute may be mitigated as soon as possible, and to facilitate cost-efficient administration of the Project. Any Claim that is not submitted within the specified deadlines will be deemed waived by Contractor.

12.3 Claims Under $50,000. For any Claim of less than $50,000.00, City will respond in writing within 45 days of receipt of the Claim, or may first request, in writing, within 30 days of receipt of the Claim, any additional documentation supporting the Claim or relating to defenses to the Claim that City may have against Contractor. If Contractor fails to submit the additional documentation to City within 15 days of receipt of City's request, the claim will be deemed waived.

(A) ***Additional Information.*** If additional information is thereafter required, it may be requested and provided upon mutual agreement of City and Contractor.

(B) ***City's Response.*** City's written response to the Claim, as further documented, will be submitted to Contractor within15 days after receipt of the further documentation or within a period of time no greater than that taken by Contractor in producing the additional information, whichever is greater.

(C) ***Non-Waiver.*** Any failure by City to respond within the times specified above may not be construed as acceptance of the Claim in whole or in part, or as a waiver of any provision of these Contract Documents.

12.4 Claims From $50,000 to $375,000. For any Claim of over $50,000.00, and less than or equal to $375,000.00, City will respond in writing within 60 days of receipt of the Claim, or may request, in writing, within 30 days of receipt of the Claim, any additional documentation supporting the Claim or relating to the defenses to the Claim that City may have against Contractor. If Contractor fails to submit the additional documentation to City within 30 days of receipt of City's request, the claim will be deemed waived.

(A) ***Additional Information.*** If additional information is thereafter required, it may be requested and provided upon mutual agreement of City and Contractor.

(B) ***City's Response.*** City's written response to the Claim, as further documented, will be submitted to Contractor within 30 days of receipt of the further documentation, or within a period of time no greater than that taken by the Contractor in producing the additional information or requested documentation, whichever is greater.

(C) ***Non-Waiver.*** Any failure by City to respond within the times specified above may not be construed as acceptance of the Claim in whole or in part, or as a waiver of any provision of these Contract Documents.

12.5 Claims Over $375,000. For any Claim of over $375,000.00, City will respond in writing within 90 days of receipt of the Claim. City may request, in writing, within 45 days of receipt of the Claim, any additional documentation supporting the Claim relating to defenses to the Claim that City may have against the Contractor. If Contractor fails to submit the additional documentation to City within 45 days of receipt of City's request, the claim will be deemed waived.

(A) ***Additional Information.*** If additional information is thereafter required, it may be requested and provided upon mutual agreement of City and Contractor.

(B) ***City's Response.*** City's response to the Claim, as further documented, will be submitted to Contractor within 45 days after receipt of the further documentation, or within a period of time no greater than that taken by Contractor in producing the additional information or requested documentation, whichever is greater.

(C) ***Non-Waiver.*** Any failure by City to respond within the times specified above may not be construed as acceptance of the Claim in whole or in part, or as a waiver of any provision of these Contract Documents.

12.6 Meet and Confer.

(A) ***Claims up to $375,000.*** For Claims less than or equal to $375,000.00, if Contractor disputes the City's written response, or City fails to respond within the specified time, Contractor must notify City in writing, either within 15 days of receipt of City's response, or within 15 days of City's failure to respond within the specified time, respectively, and demand an informal conference to meet and confer for settlement of the issues in dispute. If Contractor fails to dispute City's response, in writing, within the specified times, Contractor's Claim will be deemed waived.

(1) Upon receipt of the demand to meet and confer, City will schedule the meet and confer conference to be held within 30 days, or later if needed to ensure the mutual availability of all of the individuals that each party requires to represent its interests at the meet and confer conference.

(2) The meet and confer conference will be scheduled at a location at or near City's principal office.

(3) If the Claim or any portion remains in dispute following the meet and confer conference, the parties may agree to mediation, as set forth in Section 12.7, below, or if unable to agree, Contractor may file a claim as provided in Government Code Section 900 et seq. (a "Government Code Claim").

(B) ***Claims over $375,000.*** For any Claim greater than $375,000.00, if Contractor disputes the City's written response, or City fails to respond within the specified time, Contractor must notify City in writing, either within 30 days of receipt of City's response, or within 30 days of City's failure to respond within the specified time, respectively, and demand an informal conference to meet and confer for settlement of the issues in dispute. If Contractor fails to dispute City's response, in writing, within the specified times, Contractor's Claim will be deemed waived.

(1) Upon receipt of the demand to meet and confer, City will schedule the meet and confer conference to be held within 60 days, or later if needed to ensure the mutual availability of all of the individuals that each party requires to represent its interests at the meet and confer conference.

(2) The meet and confer conference will be scheduled at a location at or near City's principal office.

(3) For any Claim or any portion(s) of a Claim that remains in dispute following the meet and confer conference, the parties agree to make a good faith effort to resolve the dispute through mediation as a condition precedent to filing a Government Code Claim and initiating litigation.

12.7 Mediation and Government Code Claims.

(A) ***Mediation.*** Mediation under this Article will be scheduled within 60 days following conclusion of the meet and confer process, with a mediator that the parties mutually agreed upon. The mediation itself may take place more than 60 days following conclusion of the meet and confer process to ensure the mutual availability of the selected mediator and all of the individuals that each party requires to represent its interests. The parties must share the costs of mediation equally, except costs incurred by each party for representation by legal counsel or any other consultant.

(B) ***Government Code Claims***.

(1) Timely presentment of a Government Code Claim is a condition precedent to filing any legal action based on or arising from the Contract.

(2) The time for filing a Government Code Claim will be tolled from the time the Contractor submits its written Claim pursuant to Section 12.2, above, until the time that Claim is denied as a result of the meet and confer process, including any period of time used by the meet and confer process. If the parties agree to mediation pursuant to Section 12.7, below, the time for filing a Government Code Claim will be tolled until conclusion of the mediation by impasse.

12.8 Tort Claims. This Article does not apply to tort claims and nothing in this Article is intended nor shall be construed to change the time periods for filing tort-based Government Code Claims.

12.9 Arbitration. It is expressly agreed, under California Code of Civil Procedure Section 1296, that in any arbitration to resolve a dispute relating to this Contract, the arbitrator's award must be supported by law and substantial evidence.

12.10 Damages. Contractor bears the burden of proving entitlement to and the amount of any claimed damages. Contractor is not entitled to damages calculated on a total cost basis, but must prove actual damages. Contractor is not entitled to recovery of any alleged home office overhead. The Eichleay Formula may not be used for any recovery under the Contract. Contractor is not entitled to consequential damages, including home office overhead or any form of overhead not directly incurred at the Worksite; lost profits; loss of productivity; lost opportunity to work on other projects; diminished bonding capacity; increased cost of financing for the Project; extended capital costs; non-availability of labor, material or equipment due to delays; or any other indirect loss arising from the Contract.

12.11 Multiple Claims. In the interest of efficiency, City, acting in its sole discretion, may elect to process multiple Claims concurrently, in which case the applicable procedures above will be based on the total amount of such Claims rather than the amount of each

individual Claim. Any such election will not operate to change or waive any other requirements of this Article.

12.12 Other Disputes. The procedures in this Article 12 will apply to any and all disputes or legal actions, in addition to Claims, arising from or related to this Contract, unless and only to the extent that compliance with a procedural requirement is expressly and specifically waived by City. Nothing in this Article is intended to delay suspension or termination under Article 13.

Article 13 - Suspension and Termination

13.1 Suspension for Cause. In addition to all other remedies available to City, if Contractor fails to perform or correct work in accordance with the Contract Documents, City may immediately order the Work, or any portion of it, suspended until the cause for the suspension has been eliminated to City's satisfaction.

(A) ***Failure to Comply.*** Contractor will not be entitled to an increase in Contract Time or Contract Price for a suspension occasioned by Contractor's failure to comply with the Contract Documents.

(B) ***No Duty to Suspend.*** City's right to suspend the Work will not give rise to a duty to suspend the Work, and City's failure to suspend the Work will not constitute a defense to Contractor's failure to comply with the requirements of the Contract Documents.

13.2 Suspension for Convenience. City reserves the right to suspend, delay, or interrupt the performance of the Work in whole or in part, for a period of time determined to be appropriate for City's convenience, and not due to any act or omission by Contractor or its Subcontractors. Upon notice by City pursuant to this provision, Contractor must immediately suspend, delay, or interrupt the Work as directed by City. The Contract Price and the Contract Time will be equitably adjusted by Change Order to reflect the cost and delay impact occasioned by such suspension for convenience.

13.3 Termination for Default. Contractor may be deemed in default for a material breach of or inability to perform the Contract, including Contractor's refusal or failure to supply sufficient skilled workers, proper materials, or equipment to perform the Work within the Contract Time; refusal or failure to make prompt payment to its employees, Subcontractors, or suppliers or to correct rejected work; disregard of laws, regulations, ordinances, rules, or orders of any public agency with jurisdiction over the Project; or if Contractor lacks financial capacity to complete the Work within the Contract Time; or is otherwise responsible for a material breach of the Contract requirements.

(A) ***Notice.*** Upon City's determination that Contractor is in default, City may provide Contractor and its surety written notice of default and intent to terminate the Contract.

(B) ***Termination.*** Within seven calendar days after notice of intent to terminate for default has been given, unless the default is cured or arrangements to cure the default have been made and memorialized in writing, to City's satisfaction, City may terminate the Contract by written notice to Contractor with a copy to Contractor's surety.

(C) ***Waiver.*** Time being of the essence in the performance of the Work, if Contractor's surety fails to arrange for completion of the Work in accordance with the *Performance Bond*, within seven calendar days from the date of the notice of termination, Contractor's surety will be deemed to have waived its right to complete the Work under the Contract, and City may immediately make arrangements for the completion of the Work through use of its own forces, by hiring a replacement contractor, or by any other means that City determines advisable under the circumstances. Contractor and its surety will be jointly and severally liable for any additional cost incurred by City to complete the Work following termination. In addition, City will have the right to use any materials, supplies, and equipment belonging to Contractor and located at the Worksite for the purposes of completing the remaining Work.

(D) ***Wrongful Termination.*** If a court of competent jurisdiction or an arbitrator later determines that the termination for default was wrongful, the termination will be deemed to be a termination for convenience, and Contractor's damages will be strictly limited to the compensation provided for termination for convenience, in Section 13.4, below. Contractor waives any claim for any other damages for wrongful termination including consequential damages, lost opportunity costs or lost profits.

13.4 Termination for Convenience. City reserves the right to terminate all or part of the Contract for convenience upon written notice to Contractor. Upon receipt of such notice, Contractor must immediately stop the Work, comply with City's instructions to protect the completed Work and materials, and use its best efforts to minimize further costs. In the event of termination for convenience, the parties agree that the following will constitute full and fair compensation to Contractor, and that Contractor will not be entitled to any additional compensation:

(A) ***Completed Work.*** The value of its Work satisfactorily performed to date, including Project overhead and profit based on Contractor's schedule of values;

(B) ***Demobilization.*** Actual and substantiated demobilization costs; and

(C) ***Markup.*** Five percent of the total value of the Work performed as of the date of notice of termination or five percent of the value of the Work yet to be completed, whichever is less.

13.5 Provisions Remaining in Effect. Upon termination pursuant to this Article, the provisions of the Contract Documents remain in effect as to any claim, indemnity obligation, warranties, guarantees, submittals of as-built drawings, instructions, or manuals, or other such rights and obligations arising prior to the termination date.

Article 14 - Miscellaneous Provisions

14.1 Assignment of Unfair Business Practice Claims. Under Public Contract Code Section 7103.5, Contractor and its Subcontractors agree to assign to City all rights, title, and interest in and to all causes of action it may have under Section 4 of the Clayton Act (15 U.S.C. Section 15) or under the Cartwright Act (Chapter 2 (commencing with Section 16700) of Part 2 of Division 7 of the Business and Professions Code), arising from

purchases of goods, services, or materials pursuant to the Contract or subcontract. This assignment will be effective at the time City tenders Final Payment to Contractor, without further acknowledgement by the parties.

14.2 Provisions Deemed Inserted. Every provision of law required to be inserted in the Contract Documents is deemed to be inserted, and the Contract Documents will be construed and enforced as though such provision has been included. If it is discovered that through mistake or otherwise that any required provision was not inserted, or not correctly inserted, the Contract Documents will be amended accordingly.

14.3 Waiver. No waiver of a breach, failure of any condition, or any right or remedy contained in or granted by the provisions of the Contract Documents will be effective unless it is in writing and signed by the party waiving the breach, failure, right, or remedy. No waiver of any breach, failure, right, or remedy will be deemed a waiver of any other breach, failure, right, or remedy, whether or not similar, nor will any waiver constitute a continuing waiver unless specified in writing by the waiving party.

14.4 Titles, Headings, and Groupings. The titles and headings used and the groupings of provisions in the Contract Documents are for convenience only and may not be used in the construction or interpretation of the Contract Documents or relied upon for any other purpose.

14.5 Statutory and Regulatory References. With respect to any amendments to any statutes or regulations referenced in these Contract Documents, the reference is deemed to be the version in effect on the date that that bids were due.

SPECIAL CONDITIONS

1. **Insurance Requirements.** The insurance requirements of Section 4.3 are modified for this Contract only as set forth below. Except as expressly stated below, all other provisions in Section 4.3 are unchanged and remain in full force and effect.

   A. **Commercial General Liability ("CGL") Insurance.** The CGL limits set forth in subsection 4.3(A)(1) of the *General Conditions* are modified for this Contract to require at least $1,000,000 per occurrence and $2,000,000 aggregate.

FEDERAL REQUIREMENTS

Not Applicable

TECHNICAL SPECIFICATIONS

TS-1 - RESTORATION AND CORROSION BARRIER COMPOSITE LINER

PART 1 GENERAL

1.1 SECTION INCLUDES

A. Restoration and corrosion barrier composite liner for concrete and brick structures.

1.2 SUBMITTALS

A. Comply with Section 2.5 - Submittals of the General Conditions.

1. Product substitutions to be submitted by Contractor and approved by Engineer at least 10 days before bid date.

B. Product Data: Submit manufacturer's product data, including physical properties, surface preparation, application instructions, and curing instructions.

C. Test Reports: Submit manufacturer's test reports of in-place testing performed by an independent testing agency.

D. List of three Restoration and Corrosion Barrier Composite Liner projects, with at least three years of successful service history, including project name and location, names of owner and engineer, and description of products used, substrates, and application procedures. As a minimum, at least one of three projects must be accessible for physical inspection prior to acceptance of restoration mortar/corrosion barrier mortar system.

E. Written certification that both the Restoration Mortar and Corrosion Barrier Mortar were applied consecutively (essentially simultaneously) on each of the three projects submitted (both products applied within 4 hours of each other).

F. Certification that all products (restoration mortar and corrosion barrier mortar) are from a single source. Single source being defined as a single entity (person or company) that owns all rights to both the restoration mortar and corrosion barrier mortar formulations and testing data.

G. Applicator Qualifications: Submit qualifications of applicator.

1. Certification by the manufacturer stating that the applicator is trained and approved in the application of the specified products.

1.3 QUALITY ASSURANCE

A. Applicator Qualifications:

1. Trained and approved by the manufacturer in the application of the specified products.

2. Employs persons trained for the application of the specified products.

1.4 DELIVERY, STORAGE, AND HANDLING

A. Delivery: Deliver materials to site in manufacturer's original, unopened containers and packaging, with labels clearly identifying product name and manufacturer.

B. Storage:

1. Store materials in accordance with manufacturer's instructions.

2. Keep containers sealed until ready for use.

3. Store materials in a cool dry environment.

4. Storage Temperature of Corrosion Barrier Mortar: 40 to 80 degrees F.

C. Handling: Protect materials during handling and application to prevent damage.

1.5 ENVIRONMENTAL CONDITIONS

A. Do not apply materials under the following conditions:

1. Temperatures exceeding the manufacturer's recommended maximum or minimum allowable.

2. Dusty or smoke-laden atmosphere.

3. Over flowing water.

PART 2 PRODUCTS

2.1 RESTORATION AND CORROSION BARRIER COMPOSITE LINER

A. General:

1. Restoration mortar, corrosion barrier coating and manhole frame seal from single manufacturer.

2. Materials compatible with substrate and with each other. A minimum of three years of successful service history in aggressive sewer environments where the restoration mortar and corrosion barrier coating were applied simultaneously (the same day).

B. Restoration Mortar: Mainstay ML-72 Sprayable Microsilica Cement Mortar or equal. Low shrinkage, high strength, sprayable microsilica mortar.

1. Composition: Blend of cements, microsilica, thermoplastic fibers, densifiers, and modifiers. Mortar shall not contain calcium aluminate cements or aggregates.

2. Compressive Strength, ASTM C 109:
   a. 1 Day: 3,000 psi.
   b. 28 Days: 10,000 psi.

3. Flexural Strength, ASTM C293:
   a. 1 Day: 535 psi.
   b. 28 Days: 1,400 psi.

4. Tensile Strength, ASTM C-496:
   a. 1 Day: 330 psi.
   b. 28 Days: 790 psi.

5. Shrinkage, ASTM C-596:
   a. 28 Days @ 90%: 0.01 percent.

6. Uniaxial Tensile Bond Strength, ACI 503R, Appendix A:
   a. 28 Days: Greater than 500 psi over high strength concrete (5,000 psi compression strength concrete - bond strength governed by substrate tensile strength). Minimum acceptable bond = 145 psi.

7. Color: Dark gray.

C. Corrosion Barrier Coating: Mainstay DS-5 Ultra High Build Epoxy Coating or equal.

1. Composition: 100 percent solids, modified epoxy coating.

2. Thickness: Minimum of 100 mils in 1 or 2 coats.

3. Number of Components: 2.

4. Finish: Gloss.

5. Color: Light gray.

PART 3 EXECUTION

3.1 EXAMINATION

A. Examine surfaces to receive restoration mortar. Notify the Engineer in writing if surfaces are not acceptable. Do not begin surface preparation or application until unacceptable conditions have been corrected.

B. Provide the Engineer with a minimum of 3 days advance notice of completion of surface preparation and start of application.

C. Before application of each material, surfaces to be lined will be inspected by the Engineer. Correct defects or deficiencies before application of subsequent material.

D. Inspection by the Engineer or the waiver of inspection of any portion of the work shall not relieve the Contractor of responsibility to perform the work as specified.

3.2 SURFACE PREPARATION

A. Prepare surfaces in accordance with manufacturer's instructions.

B. Cleaning: Clean surfaces by water or abrasive blasting (minimum 3,500 psi water blast), or hand or power tools as required to remove all unsound concrete, contaminants, dirt, debris, and deteriorated reinforcing steel.

C. Inspection:

1. Inspect cleaned surfaces to identify and mark corroded reinforcing steel; and to locate cracks, leaks, and joints.

2. If indicated, perform electrical potential testing in accordance with ASTM C 876.

D. Replace or treat corroded reinforcing steel, repair cracks and leaks, and treat joints in accordance with manufacturer's instructions and as approved by the Engineer.

E. Refer to ICRI Technical Guideline No. 03730 - Surface Preparation Guidelines for the Repair of Deteriorated Concrete Resulting From Reinforcing Steel Corrosion.

F. Apply Madewell 1312P epoxy putty or equal after cleaning reinforcing steel to protect the steel from contamination and re-rusting.

G. Prepare surfaces to have a minimum profile of 1/16 inch, with aggregate exposed.

H. Inspect surfaces for soundness.

I. Saturate all surfaces thoroughly with clean water.

J. Apply restoration mortar as soon as water sheen is no longer visible (saturated surface dry).

3.3 APPLICATION OF RESTORATION MORTAR

A. Apply restoration mortar in accordance with manufacturer's instructions.

B. Apply by one of the following methods:

1. Low pressure, low volume spray equipment (rotor/stator or piston pumps such as those manufactured by Putzmeister).

2. Wet mix shotcrete equipment.

3. Hand trowel into place.

4. Centrifugal application by use of the Mainstay Mortar Applicator.

C. Apply uniformly to substrate to the specified thickness.

D. Do not trap air in corners, behind exposed reinforcing steel, or between lifts.

E. Mortar Thickness: Apply a minimum thickness of 1/4 inch above peaks of existing profile after surface preparation.

F. Finishing: Finish surface with wood float, sponge float, broom, or brush to produce a textured surface upon which to apply Corrosion Barrier Mortar.

G. Hot Weather Application:

1. Follow manufacturer's instructions to reduce evaporation rate of surface moisture until Corrosion Barrier Mortar can be applied.

2. If applying mortar under conditions such as high temperatures of mortar, substrate, or air; high winds; and low humidity; alone or in combination; rapid evaporation of surface moisture can occur and cause plastic shrinkage cracking. Apply Epoxy Corrosion Barrier Mortar or Madewell 927 primer/ sealer or equal a maximum of 1 hour after placing Restoration Mortar.

3. If conditions prevent application of Epoxy Corrosion Barrier Mortar or primer, refer to ACI 305R-91, Figure 2.1.5 to estimate the evaporation rate of surface moisture from the mortar, based on temperatures, relative humidity, and wind velocity. Cover with plastic film or wet burlap to limit evaporation rate to a maximum of 0.1 pounds per square foot per hour.

H. Cold Weather Application:

1. Follow manufacturer's instructions for minimum application temperature and minimum number of days to protect from freezing.

2. During cold weather (a period when for more than 3 successive days the average daily outdoor temperature drops below 40 degrees F) place Restoration Mortar at a minimum temperature of 55 degrees F and protect mortar from freezing for a minimum period of 3 days at a temperature between 55 and 75 degrees F. Gradually reduce mortar temperature during the protection period so that the final 24 hours is held as close to 55 degrees F as practical.

3. During periods not defined as cold weather, but when freezing temperatures may occur, protect the mortar against freezing as specified for cold weather for the first 24 hours after application.

3.4 APPLICATION OF EPOXY CORROSION BARRIER COATING

A. Apply Epoxy Corrosion Barrier Coating in accordance with manufacturer's instructions. Do not apply to manhole frame.

B. Apply Epoxy Corrosion Barrier Coating as soon as possible after finishing of restoration mortar, but before it is allowed to cure for more than 4 hours. If the Epoxy Corrosion Barrier Coating cannot be applied within this time frame, the surface of the Restoration Mortar shall be primed within that time frame with Madewell 927 Penetrating Primer or equal to hold the surface for up to 72 hours.

C. Do not allow surface contamination to the finished restoration mortar before application of Epoxy Corrosion Barrier Coating. Remove any contamination of primed mortar before application of Epoxy Corrosion Barrier Coating by means of high pressure (min. 3,500 psi) water blast.

D. Corrosion Barrier Coating Thickness: Apply a minimum thickness of 100 mils.

3.5 CURING OF CORROSION BARRIER COATING

A. Foot Traffic: Allow a minimum cure time of 24 hours at 70 degrees F.

B. Curing Conditions:

1. Continue to protect Composite Liner from freezing throughout protection periods specified for cold weather application.

2. Shelter Composite Liner from direct impingement of water until 1 to 3 hours after application of Corrosion Barrier Coating, depending on substrate temperatures, after which cure sufficiently to be undamaged by water impingement or immersion at ordinary velocities.

3. Sanitary Sewer Systems: It may be necessary to plug services or main lines temporarily in order to achieve these environmental conditions, but bypass pumping should seldom be required.

C. Immersion Service: Reach a tack-free condition before being immersed.

3.6 FIELD QUALITY CONTROL

A. Field Quality Control Testing: Performed by the Engineer or a NACE International Certified Coating Inspector at the Owner's expense.

B. Field Mock up: The contractor shall install a 5’ x 5’ field mockup to be tested in accordance with C, D and E below before additional application work can proceed.

C. Destructive Dry Film Thickness Tests, ASTM D 4138:

1. Perform 1 test for every 500 square feet of surface lined. If the thickness is correct, no further testing is required for that area.
2. If the initial thickness test does not indicate correct film thickness, an additional 4 measurements will be made, the average of which must equal minimum specified thickness, although individual measurements may under run this amount by a maximum of 20 percent.

3. Any area that does not meet the specified thickness as tested in 1 and 2 above, shall receive additional Epoxy Corrosion Barrier Coating (depending on the time and environment, additional surface preparation may be required).

4. If the areas tested are of proper thickness, destructive test sites shall be repaired with the appropriate barrier mortar at the contractor's expense prior to placing the system into service.

D. Spot Adhesion Testing of Restoration and Corrosion Barrier Composite Liner to Substrate:

1. Perform minimum of 1 uniaxial pull-off adhesion test for every 500 square feet of surface lined.

2. Remove and replace areas not meeting required 145 psi at 28 days minimum adhesion requirement.

3. If the condition of the substrate is such that minimum pull-off adhesion requirement cannot be met by removal of the upper ¼ inch of the substrate, work shall not proceed until a course of corrective action has been determined that will effectively produce the required adhesion results. When an effective course of remedial action has been determined, the owner's representative and the contractor shall negotiate a mutually agreeable settlement to cover the costs associated with the surface evaluation and remedial action.

E. Visual and Electrical Inspection for Holidays in Epoxy Corrosion Barrier Coating:

1. Visual Inspection: Perform visual inspection for holidays in Epoxy Corrosion Barrier Coating. Mark areas identified for repair and reapplication of Epoxy Corrosion Barrier Coating.

2. Electrical Inspection: Perform spark testing in accordance with NACE RP 0188 or as recommended by the manufacturer. Mark areas identified for repair and reapplication of Corrosion Barrier Coating.

3. Areas Marked for Repair or reapplication of Epoxy Corrosion Barrier Coating: Sand or grind down to substrate, clean, spray with Madewell 927 primer/sealer or equal, and recoat with specified Epoxy Corrosion Barrier Coating.

Part 4 – Measurement and Payment

The contract price paid for lump sum Remove and Replace Protective Coating shall include full compensation for furnishing all labor, materials, tools, equipment, and incidentals, and for doing all the work necessary to remove the existing protective coating by sandblasting, surface preparation, placement of restoration mortar and corrosion barrier coating, and for doing all of the work involved as described in these Technical Specifications, and as directed by the Project Manager, and no additional compensation will be allowed therefor.

APPENDIX “A” AND APPENDIX “B”

Reference Purposes Only

APPENDIX "A"
ASBUILT DRAWING OF WASTEWATER TREATMENT PLANT CHEMICAL FACILITY

REFERENCE PURPOSES ONLY

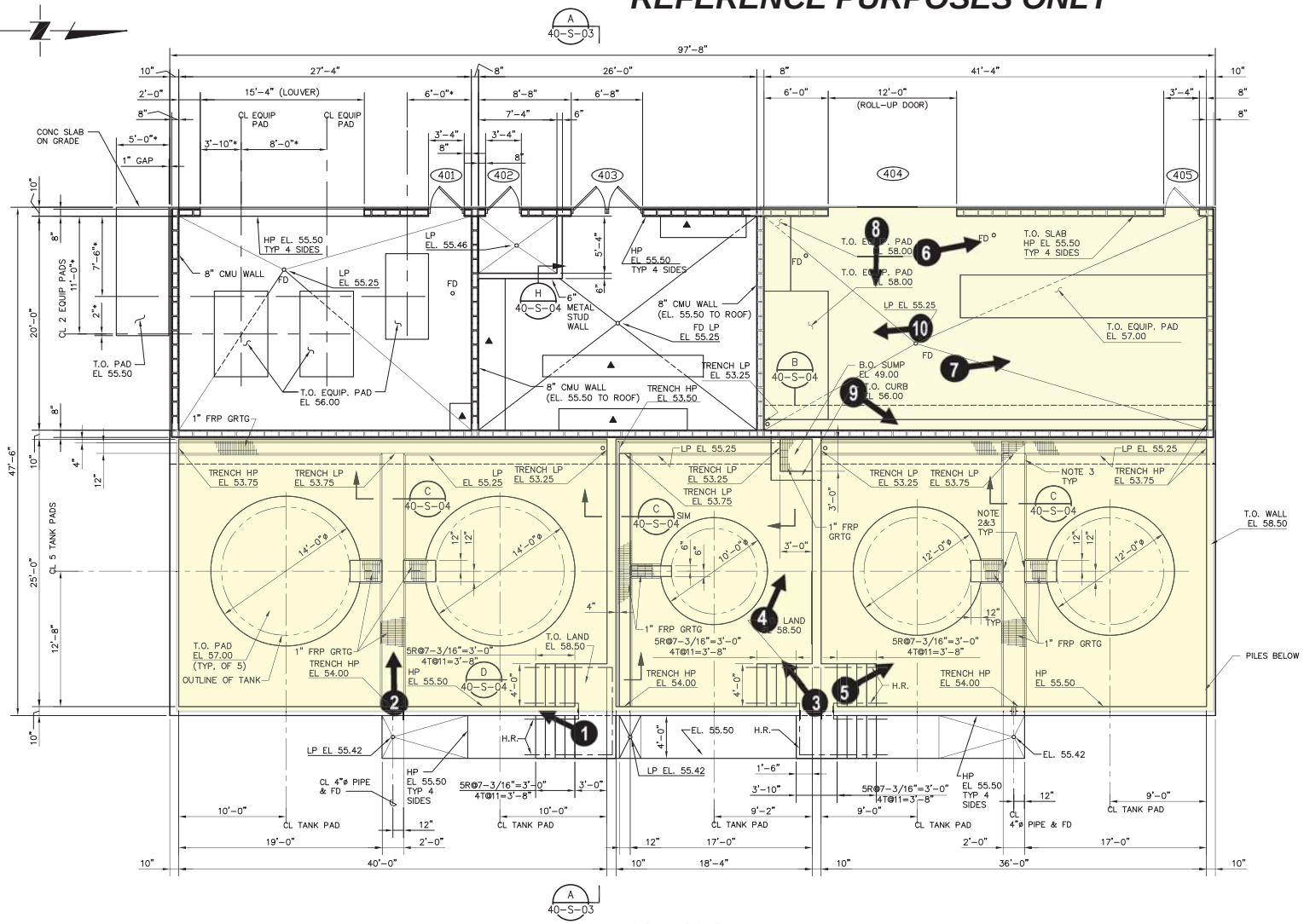

CHEMICAL FACILITY

FOUNDATION PLAN

SCALE: 3/16" = 1'-0"

Location of Work

See Corresponding Photos in Appendix B

NOTES:

1. * COORDINATE LOCATION OF EQUIP. PADS W/ MECHANICAL DRAWINGS AND EQUIP. MANUFACTURER
2. CONTINUE FRP GRATING SUPPORT ACROSS OPENING
3. EXTEND SOLID PIECE OF GRTG 18" MIN BEYOND OPENING
4. FRP GRATING SHALL BE FRP MOLDED GRATING
5. BLOCK DIM'S ARE NOMINAL INSIDE FACE OF BLOCK SHOULD LINE UP W/ INSIDE FACE OF CONCRETE
6. ▲ – T.O. EQUIP PAD @ EL 55.83 COORDINATE SIZE OF PAD W/ EQUIP SUPPLIED
7. CONCRETE IN CHEMICAL TANK AND CHEMICAL ROOM AREAS SHALL BE COATED WITH SYSTEMS C3 AND C5 OR NOTED IN SPECIFICATION SECTION 09800

RECORD DRAWING

These record drawings have been prepared based on information provided by others. The Engineer has not verified the accuracy of such information and shall not be responsible for any errors or omissions which may be incorporated herein as a result. SEE ORIGINAL CONTRACT DRAWING FOR SEAL AND SIGNATURES.

Drawing Number
40-S-02

APPENDIX "A"
ASBUILT DRAWING OF WASTEWATER TREATMENT PLANT CHEMICAL FACILITY

REFERENCE PURPOSES ONLY

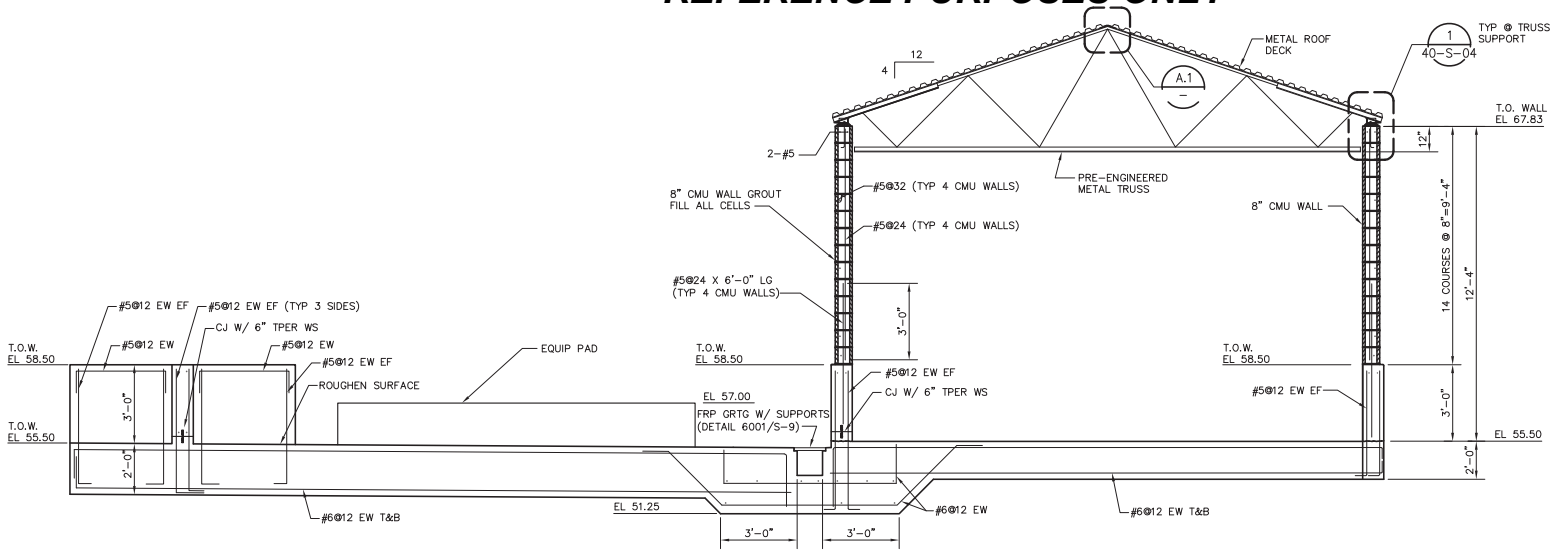

SECTION A 41-S-3
SCALE: 3/8" = 1'-0"

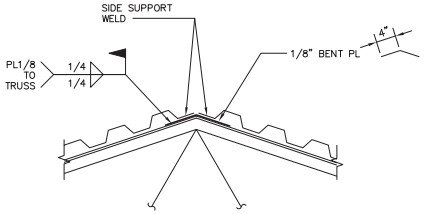

SECTION A.1 41-S-03
SCALE: 3/8" = 1'-0"

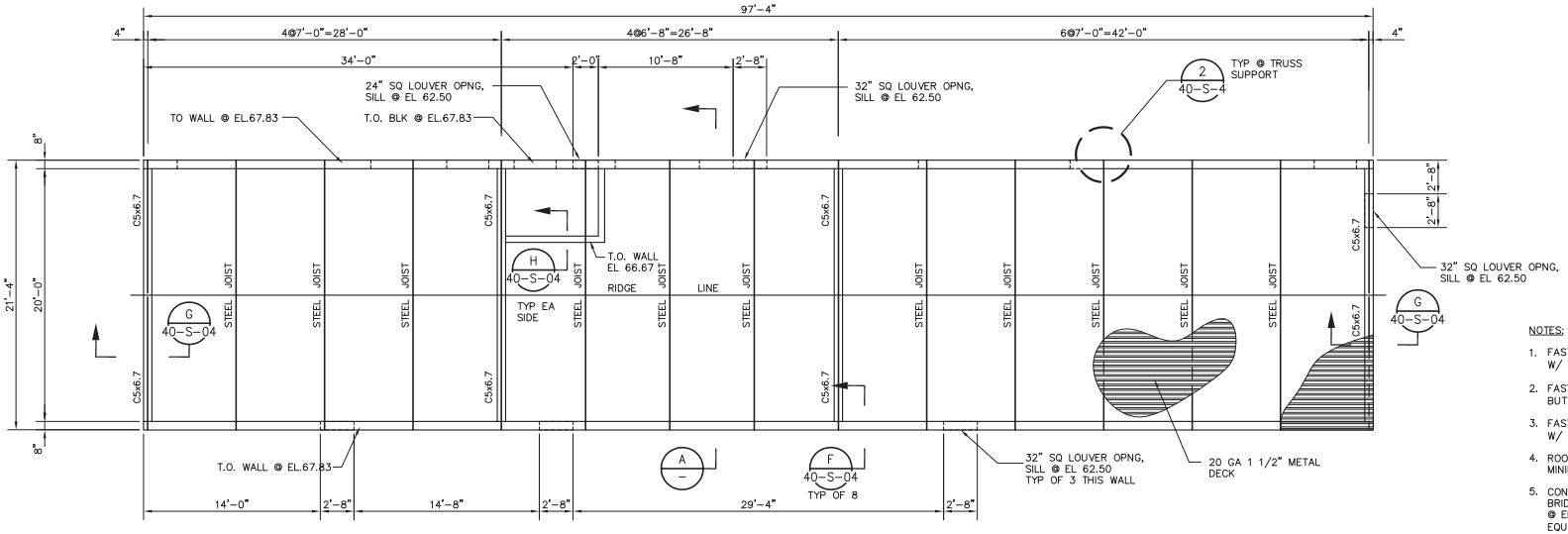

CHEMICAL FACILITY

ROOF PLAN

SCALE: 3/16" = 1'-0"

NOTES:

1. FASTEN METAL DECK TO END SUPPORTS W/ 5-1/2"ø PLUG WELDS PER PANEL.
2. FASTEN METAL DECK SIDE LAPS W/ 3/16" BUTTON PUNCHES AT 24" OC.
3. FASTEN METAL DECK TO SIDE SUPPORTS W/ 1/2"ø PLUG WELDS @ 12" OC.
4. ROOF DECK SHALL BE CONTINUOUS FOR A MINIMUM OF 3 SPANS.
5. CONTRACTOR SHALL PROVIDE HORIZONTAL BRIDGING, CONFORMING TO STI STANDARDS @ END PANEL POINTS AND 2 ADDITIONAL EQUALLY SPACED ROWS (4 ROWS TOTAL).
6. ROOF TRUSSES SHALL BE DESIGNED FOR A DEAD LOAD OF 20 PSF AND A LIVE LOAD OF 16 PSF.

RECORD DRAWING
These record drawings have been prepared based on information provided by others. The Engineer has not verified the accuracy of such information and shall not be responsible for any errors or omissions which may be incorporated herein as a result. SEE ORIGINAL CONTRACT DRAWING FOR SEAL AND SIGNATURES.

Drawing Number
40-S-03

APPENDIX "A"
ASBUILT DRAWING OF WASTEWATER TREATMENT PLANT CHEMICAL FACILITY

REFERENCE PURPOSES ONLY

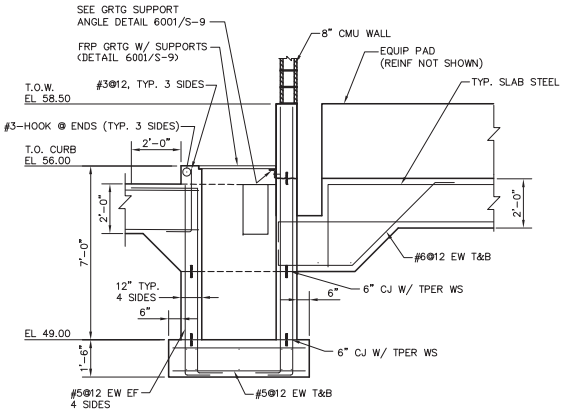

SECTION B 40-S-02
SCALE: 3/8"=1'-0"

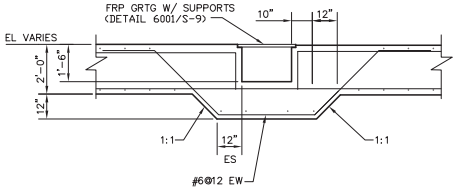

SECTION C 40-S-02
SCALE: 3/8"=1'-0"

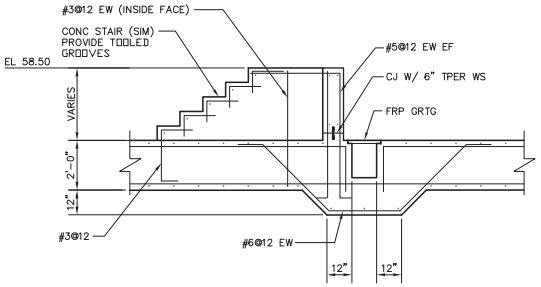

SECTION D 40-S-02
SCALE 3/4"=1'-0"

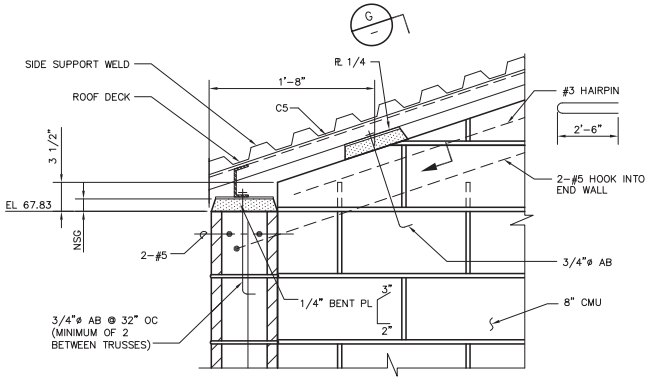

SECTION F 40-S-04
SCALE: 1 1/2"=1'-0"

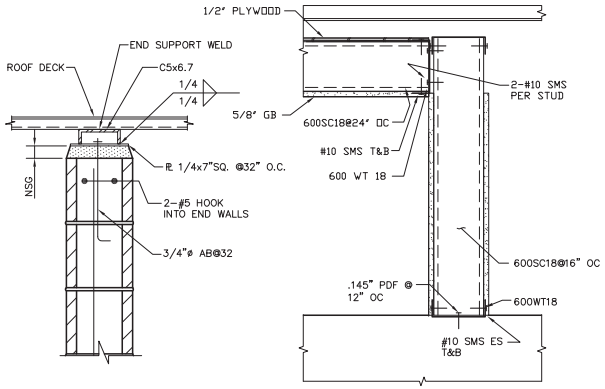

SECTION G 40-S-04
SCALE: 1 1/2"=1'-0"

SECTION H 40-S-03
SCALE: 1 1/2"=1'-0"

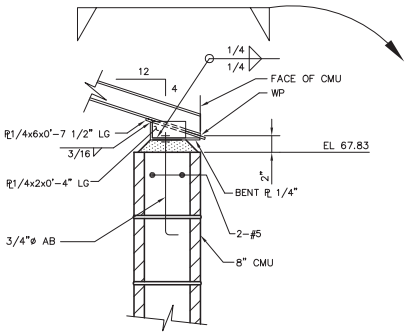

DETAIL 1 40-S-03
SCALE: 1 1/2"=1'-0"

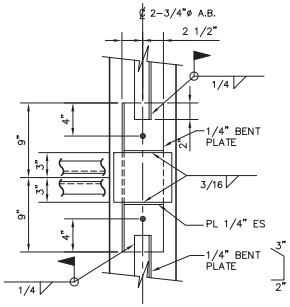

DETAIL 2 40-S-03
SCALE: 1 1/2"=1'-0"

RECORD DRAWING
These record drawings have been prepared based on information provided by others. The Engineer has not verified the accuracy of such information and shall not be responsible for any errors or omissions which may be incorporated herein as a result. SEE ORIGINAL CONTRACT DRAWING FOR SEAL AND SIGNATURES.

Drawing Number
40-S-04

APPENDIX “B”
PHOTOS OF THE WASTEWATER TREATMENT PLANT
CHEMICAL FACILITY

Photo 1

Photo 2

APPENDIX “B”
PHOTOS OF THE WASTEWATER TREATMENT PLANT
CHEMICAL FACILITY

Photo 3

Photo 4

Remove and replace existing restoration mortar and allow for proper drainage.

APPENDIX “B”
PHOTOS OF THE WASTEWATER TREATMENT PLANT
CHEMICAL FACILITY

Photo 5

Photo 6

APPENDIX “B”
PHOTOS OF THE WASTEWATER TREATMENT PLANT
CHEMICAL FACILITY

Photo 7

Photo 8

APPENDIX “B”
PHOTOS OF THE WASTEWATER TREATMENT PLANT
CHEMICAL FACILITY

Photo 9

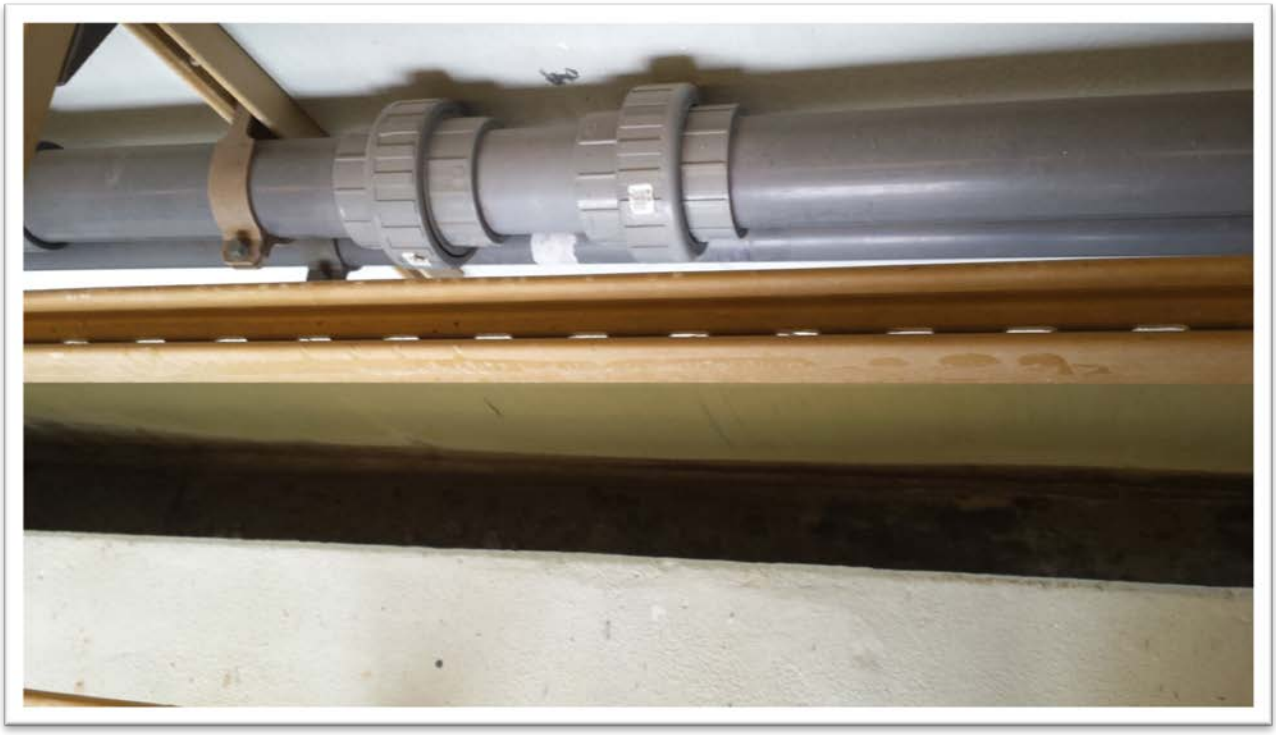

Photo 10