REFERENCE ONLY

THE CITY OF BRENTWOOD

HERITAGE ▪ VISION ▪ OPPORTUNITY

CONTRACT DOCUMENTS
FOR

2016 Pavement Management Program and Trail Pavement Management

CIP Project Nos. 336-30836 and 352-52413

Bid Opening: Tuesday, April 19, 2016 at 2:00 p.m.

Location of Bid Submittal: City Clerk
Brentwood City Hall
Third Floor
150 City Park Way
Brentwood, CA 94513

Approved by: Jagtar "Jack" Dhaliwal
Interim City Engineer

Jagtar Dhaliwal
Signature

3/28/16
Date

CITY OF BRENTWOOD
CONTRA COSTA COUNTY
STATE OF CALIFORNIA

CONTRACT DOCUMENTS FOR THE
CONSTRUCTION OF

2016 Pavement Management Program and Trail Pavement Management

CIP Project Nos. 336-30836 and 352-52413

Prepared Under the Supervision of:

Steve Kersevan, P.E.
License # C38340
Expires 03/31/17

Stamp Seal

Signature

3-28-16
Date

2016 Pavement Management Program and Trail Pavement Management
CIP Project Nos. 336-30836 and 352-52413

TABLE OF CONTENTS

Part A - Bidder Information
Notice Inviting Bids....1
Instructions To Bidders....3
Bidder's Request For Information Form....8

Part B - Bid Proposal
Bid Proposal....9
Bid Schedule....11
Subcontractor List....13
Noncollusion Declaration....14
Bid Bond....15
Bidder's Questionnaire....17

Part C - Contract and Bonds
Contract....19
Payment Bond....23
Performance Bond....25
Warranty Bond....27

Part D - General Conditions....29

Article 1 - Definitions....29
1.1 Definitions....29

Article 2 - Roles and Responsibilities....31
2.1 Design Professional....31
2.2 Contractor....32
2.3 Subcontractors....33
2.4 Coordination of Work....34
2.5 Submittals....34
2.6 Material Samples....35

Article 3 - Contract Documents....35
3.1 Interpretation of Contract Documents....35
3.2 Order of Precedence....36
3.3 Caltrans Standard Specifications....36
3.4 For Reference Only....37

Article 4 - Bonds, Indemnity, and Insurance....37
4.1 Payment and Performance Bonds....37
4.2 Indemnity and Liability....37
4.3 Insurance....38
4.4 Warranty Bond....40

Article 5 - Contract Time....40
5.1 Time is of the Essence....40
5.2 Schedule Requirements....40

5.3 Delay and Extensions of Contract Time. 42
5.4 Liquidated Damages. 43

Article 6 - Contract Modification 44
6.1 Changes in Work. 44
6.2 Contractor Change Order Requests. 45
6.3 Adjustments to Contract Price. 45
6.4 Unilateral Change Order. 46
6.5 Non-Compliance Deemed Waiver. 46

Article 7 - General Construction Provisions 46
7.1 Permits and Taxes. 46
7.2 Temporary Facilities. 46
7.3 Signs. 47
7.4 Protection of Work and Property. 47
7.5 Noninterference. 47
7.6 Materials and Equipment. 47
7.7 Substitutions 48
7.8 Testing and Inspection 49
7.9 Clean up 50
7.10 Instructions and Manuals. 50
7.11 As-built Drawings. 50
7.12 Existing Utilities. 51
7.13 Notice of Excavation. 51
7.14 Trenching and Excavations. 51
7.15 Trenching of Five Feet or More. 52
7.16 New Utility Connections. 52
7.17 Lines and Grades. 52
7.18 Historic or Archeological Items. 53
7.19 Environmental Control. 53
7.20 Photographic Documentation. 53

Article 8 - Payment 54
8.1 Schedule of Values. 54
8.2 Progress Payments. 54
8.3 Adjustment of Payment Application. 55
8.4 Acceptance of Work. 55
8.5 Retention. 55
8.6 Setoff. 56
8.7 Payment to Subcontractors and Suppliers. 56
8.8 Final Payment. 56
8.9 Release of Claims. 56
8.10 Warranty of Title. 56

Article 9 - Labor Provisions 57
9.1 Discrimination Prohibited. 57
9.2 Labor Code Requirements. 57
9.3 Prevailing Wages. 57
9.4 Payroll Records. 57
9.5 Labor Compliance. 58

Article 10 - Safety Provisions 58
10.1 Safety Precautions and Programs. 58

10.2 Hazardous Materials. 59
10.3 Material Safety. 59

Article 11 - Completion and Warranty Provisions 59
11.1 Final Completion. 59
11.2 Warranty. 60
11.3 Use Prior to Final Completion. 61
11.4 Substantial Completion. 61

Article 12 - Dispute Resolution 61
12.1 Claims. 61
12.2 Claims Submission. 62
12.3 Claims Under $50,000. 63
12.4 Claims From $50,000 to $375,000. 63
12.5 Claims Over $375,000. 63
12.6 Meet and Confer. 64
12.7 Mediation and Government Code Claims. 65
12.8 Tort Claims. 65
12.9 Arbitration. 65
12.10 Damages. 65
12.11 Multiple Claims. 66
12.12 Other Disputes. 66

Article 13 - Suspension and Termination 66
13.1 Suspension for Cause. 66
13.2 Suspension for Convenience. 66
13.3 Termination for Default. 66
13.4 Termination for Convenience. 67
13.5 Provisions Remaining in Effect. 67

Article 14 - Miscellaneous Provisions 68
14.1 Assignment of Unfair Business Practice Claims. 68
14.2 Provisions Deemed Inserted. 68
14.3 Waiver. 68
14.4 Titles, Headings, and Groupings. 68
14.5 Statutory and Regulatory References. 68

Part E - Special Conditions 69

Part F - Federal Requirements 70

Part G - Technical Specifications 71

SECTION TS-1 GENERAL 71

A. Scope Of Work 71
B. Submittals 71
C. Adjacent Property Owners 71
D. Sound Control Requirements 72
E. Limits Of Work 72
F. Permits 73
G. Haul Route Approval 73
H. Watering 74
I. Dust Control 74
J. Dust Palliative 74
K. Electric Power 74

SECTION TS-2 OBSTRUCTIONS AND OTHER UTILITY'S WORK 75
A. General 75
B. Other Existing Utilities 76
SECTION TS-3 EXISTING FACILITIES 76
A. General 76
B. Existing Trees 77
C. Existing Utilities 77
D. Existing Detector Loops 78
E. Existing Traffic Striping, Markings, And Markers 78
F. Measurement And Payment 78
SECTION TS-4 NPDES PERMIT 79
A. General 79
B. Material Storage 79
C. De-Watering Operations 79
D. Pavement Saw-Cutting Operations. 80
E. Pavement Operations 80
F. Concrete Operations 81
G. Grading And Excavation Operations 81
H. Spill Prevention And Control 82
I. Vehicle/Equipment Cleaning 82
J. Contractor Training And Awareness 83
K. Good Housekeeping Practices 83
L. Measurement And Payment 84
SECTION TS-5 TRAFFIC CONTROL 84
A. Traffic Control 84
B. Traffic Control Supervisor 84
C. Construction Area Traffic Control Devices 86
D. Construction Area Signs 87
E. Maintaining Traffic 87
F. Closure Requirements And Conditions 88
G. Traffic Control System For Lane Closure 89
H. Temporary Pavement Delineation 90
I. Temporary Laneline And Centerline Delineation 91
J. Measurement And Payment 92
SECTION TS-6 STAGING 92
A. General 92
B. Measurement And Payment 93
SECTION TS-7 NOTIFICATION OF THE PUBLIC AND CITY SERVICES 93
A. General 93
B. Measurement And Payment 95
SECTION TS-8 PROJECT APPEARANCE AND STREET SWEEPING 95
A. General 95
B. Measurement And Payment 96
SECTION TS-9 TYPE II SLURRY SEAL 96
A. Schedule 96
B. General 96
C. Latex Emulsified Asphalt Slurry Seal 96

D. Latex Asphalt Emulsion Requirements....96
E. Materials....96
F. Procedures....100
G. Measurement And Payment....101

SECTION TS-10 ASPHALT PAVEMENT OVERCOAT....101

A. General....101
B. Proportioning....102
C. Mixing....102
D. Placing....102
E. Measurement And Payment....103

SECTION TS-11 TRAFFIC STRIPES AND PAVEMENT MARKINGS (THERMOPLASTIC)....104

A. General....104
B. Measurement And Payment....105

SECTION TS-12 PAVEMENT MARKERS....105

A. General....105
B. Measurement And Payment....106

SECTION TS-13 CLEAN-UP....106

A. General....106
B. Measurement And Payment....107

SECTION TS-14 COLD PLANE MILLING....107

A. General....107
B. Equipment....107
C. Procedures....107
D. Measurement And Payment....108

SECTION TS-15 GRIND AND OVERLAY....108

A. General....108
B. Materials....108
C. Procedures....108
D. Measurement And Payment....109

SECTION TS-16 ASPHALT CONCRETE PAVEMENT....109

A. General....109
Materials....109
B. Asphalt Binder....109
C. Aggregate Grading....109
D. Mix Design....110
E. Tack Coat....110
F. Spreading And Compacting....110
G. Thickness At Lip Of Gutter....111
H. Measurement And Payment....111

SECTION TS-17 ADJUST EXISTING FACILITIES TO GRADE....111

A. Measurement And Payment....111
B. Measurement And Payment....112

SECTION TS-18 TRAFFIC SIGNAL DETECTOR LOOPS....113

A. General....113
B. Materials....113

C. Measurement And Payment....114
SECTION TS-19 CONCRETE CURB RAMP OR HANDICAP RAMP 115
A. General....115
B. Materials....115
C. Procedures....115
D. Surface Applied Truncated Domes....117
E. Measurement And Payment....117
SECTION TS-20 SUBSURFACE DRAIN 118
A. General....118
B. Measurement And Payment....118

APPENDICES....119
APPENDIX A – Streets List and Quantities Take Off....120
APPENDIX B – Standard Plans....122

NOTICE INVITING BIDS

1. Bid Acceptance. The City of Brentwood ("City"), will accept sealed bids for its 2016 Pavement Management Program and Trail Pavement Management, CIP Project Nos. 336-30836 and 352-52413 ("Project"), by or before Tuesday, April 19, 2016, at 2:00 p.m., at its City Clerk's office, located at Brentwood City Hall, Third Floor, 150 City Park Way, Brentwood, California 94513. The bids will be publicly opened and read aloud at Brentwood City Hall, 150 City Park Way, Brentwood, CA 94513.

2. Project Information.

2.1 Location and Description. The Project is located at various sites throughout the City, and is described as follows: grinding and overlay of certain roads and placement of slurry seal.

2.2 Construction Time. The planned timeframe for beginning and completion of construction of the Project is: 40 working days.

2.3 Engineer's Estimate. The City Engineer's estimate for the cost of construction cost is approximately $1,140,000.

3. License and Registration Requirements.

3.1 License. This Project requires a valid California contractor's license for the following classification(s): "Class "A" or combination of Class "C" Specialty Contractor's License(s)"

3.2 DIR Registration. City will not accept a *Bid Proposal* from or enter into a contract with a bidder without proof that the bidder and its subcontractors are registered with the California Department of Industrial Relations ("DIR") to perform public work under Labor Code Section 1725.5, subject to limited legal exceptions.

4. Contract Documents. Bidders must obtain an electronic copy of the Contract Documents directly from the City of Brentwood. The Contract Documents may be obtained at no charge by sending an email to: engineering@brentwoodca.gov or by calling 925-516-5420. The City may reject a bid submitted by a bidder that did not obtain the Contract Documents from the City as required.

5. Bid Proposal and Security.

5.1 Bid Proposal Form. Each Bid must be submitted using the *Bid Proposal* form provided with the Contract Documents.

5.2 Bid Security. The *Bid Proposal* must be accompanied by bid security of ten percent of the maximum bid amount, in the form of a cashier's or certified check made payable to the City of Brentwood, or a bid bond executed by a surety licensed to do business in the State of California on the *Bid Bond* form included with the Contract Documents. The bid security must guarantee that upon award of the bid, the bidder will execute the *Contract* and submit payment and performance bonds and insurance certificates as required by the Contract Documents within ten days after issuance of the notice of award.

6. Prevailing Wage Requirements.

6.1 General. This Project is subject to the prevailing wage requirements applicable to the locality in which the Work is to be performed for each craft, classification or type of worker needed to perform the Work, including employer payments for health and welfare, pension, vacation, apprenticeship and similar purposes.

6.2 Rates. These prevailing rates are available online at http://www.dir.ca.gov/DLSR. Each Contractor and Subcontractor must pay no less than the specified rates to all workers employed to work on the Project. The schedule of per diem wages is based upon a working day of eight hours. The rate for holiday and overtime work must be at least time and one-half.

6.3 Compliance. This Contract is subject to compliance monitoring and enforcement by the DIR, under Labor Code Section 1771.4.

7. Performance and Payment Bonds. The successful bidder will be required to provide performance and payment bonds for 100% of the Contract Price.

8. Substitution of Securities. Substitution of appropriate securities in lieu of retention amounts from progress payments is permitted under Public Contract Code Section 22300.

9. Subcontractor List. Each bidder must submit the name, location of the place of business, and California contractor license number, DIR registration number, and percentage of the Work to be performed for each Subcontractor who will perform Work or service or fabricate or install Work for the prime contractor in excess of one-half of 1% of the bid price, using the *Subcontractor List* form included with the Contract Documents. No more than 50% of the Work may be performed by Subcontractors.

10. Instructions to Bidders. Additional information is provided in the *Instructions to Bidders*, which should be carefully reviewed before submitting a *Bid Proposal*.

By: Margaret Wimberly _____ 3/28/16 _____

Margaret Wimberly MMC, City Clerk Date

INSTRUCTIONS TO BIDDERS

Each *Bid Proposal* submitted to the City of Brentwood ("City") for its 2016 Pavement Management Program and Trail Pavement Management ("Project") must be submitted in accordance with the following instructions and requirements:

1. Bid Submission.

1.1 General. Each bid must be signed, sealed and submitted to the City, using the form provided in the Contract Documents ("*Bid Proposal*"), by or before the date and time set forth in the *Notice Inviting Bids*, or as amended by subsequent addendum. Faxed or emailed *Bid Proposals* will not be accepted, unless otherwise specified. Late submissions will be returned unopened. City reserves the right to postpone the date and time for receiving or opening bids. Each bidder is solely responsible for all of its costs to prepare and submit its bid and by submitting a bid waives any right to recover those costs from City. The bid price(s) must include all costs to perform the Work as specified, including all indirect costs such as applicable taxes, insurance and field offices.

1.2 Bid Envelope. The envelope containing the sealed *Bid Proposal* and required attachments must be clearly labeled and addressed as follows:

Bid Proposal
2016 Pavement Management Program & Trail Pavement Management
CIP Project Nos. 336-30836 and 352-52413
Bid Date: _____
City of Brentwood
150 City Park Way, Brentwood, California 94513
Attn: City Clerk

The envelope must also be clearly labeled as follows with the bidder's name, address, and its registration number as required by the California Department of Industrial Relations ("DIR") for public works contracts:

[Contractor company name]
[street address], [city, state, zip code]
DIR Registration No: _____

Please note: If the City is unable to confirm that the bidder's DIR registration is current, the City must disqualify the bidder and return its bid unopened. (Labor Code section 1725.5.)

2. Examination of Contract Documents and Project Site. Bidder's Responsibilities. Each bidder is solely responsible for diligent and thorough review of the Contract Documents (as defined in the *General Conditions*), examination of Project site, and reasonable and prudent inquiry concerning known and potential site conditions prior to submitting a *Bid Proposal*. However, bidders should not enter onto the Project site without prior written authorization from City. Bidders are responsible for reporting any errors or omissions in the Contract Documents to City prior to submitting a *Bid Proposal*, subject to the limitations of Public Contract Code Section 1104. City expressly disclaims responsibility for assumptions the bidder might draw from the presence or absence of information provided by City.

3. **Requests for Information.** Questions regarding the Project, the bid procedures or any of the Contract Documents must be submitted in writing using the *Bidder's Request for Information* form provided, at least five working days before the date specified for submission of Bids, to: Steve Kersevan at engineering@brentwoodca.gov.

4. **Addenda.** Any addenda issued prior to the bid opening will constitute part of the Contract Documents. Subject to the limitations of Public Contract Code section 4104.5, City reserves the right to issue addenda prior to bid time.

5. **Brand Designations and "Or Equal" Substitutions.** Any specification designating a material, product, thing, or service by specific brand or trade name, followed by the words "or equal," is intended only to indicate quality and type of item desired, and bidders may request use of any equal material, product, thing, or service. All data substantiating the proposed substitute as an "equal" item must be submitted with the written request for substitution. All data substantiating the proposed substitute as an "equal item" must be submitted with the written request for substitution. The City Engineer has the sole discretion to determine whether a proposed substitute is an "equal" item, and the City Engineer's decision is final. This provision does not apply to materials, products, things, or services that may lawfully be designated by a specific brand or trade name under Public Contract Code Section 3400(c). Any request for substitution must be submitted to the City Engineer at least five Working Days before the opening of bids so that all interested bidders may be notified of any approved alternative.

6. **Bidders Interested in More Than One Bid.** No person, firm, or corporation may submit or be a party to more than one *Bid Proposal* unless alternate bids are specifically called for. However, a person, firm, or corporation that has submitted a subcontract proposal or quote to a bidder may submit subcontract proposals or quotes to other bidders, and may also submit a *Bid Proposal* as a prime contractor.

7. **Bid Proposal Form and Enclosures.**

   7.1 Bid Proposal Form. Each *Bid Proposal* must be completed in ink using the *Bid Proposal* form included in the Contract Documents. The *Bid Proposal* form should be fully completed without interlineations, alterations, or erasures. Any necessary corrections must be clear and legible, and must be initialed by the bidder's authorized representative. A *Bid Proposal* submitted with terms such as "negotiable," "will negotiate," or similar, will be considered non-responsive.

   7.2 Enclosures. Each *Bid Proposal* must be accompanied by bid security, as set forth in Section 9 below, and by the completed *Bid Schedule*, *Subcontractor List*, *Non-Collusion Declaration*, and any other required enclosures, using the forms included in the Contract Documents.

   7.3 Bidder's Questionnaire. After the bids have been opened, the City may request a completed, signed *Bidder's Questionnaire* from one or more of the apparent low bidders. The *Bidder's Questionnaire* must be submitted within 48 hours of the City's request, using the form provided by City. If a bidder fails to fully comply with this requirement following the City's request, its *Bid Proposal* may be rejected as nonresponsive. A bidder who submits a *Bidder's Questionnaire* which is subsequently determined to contain false or misleading information, or material omissions, may be disqualified as non-responsible.

8. **Signature Requirements.** Each *Bid Proposal* must be signed by the bidder's authorized representative. A *Bid Proposal* submitted by a partnership must be signed in the partnership name by a general partner with authority to bind the partnership. A *Bid Proposal* submitted by a corporation must be signed with the legal name of the corporation, followed by the signature and title of two officers of the corporation with full authority to bind the corporation to the terms of the *Bid Proposal*, under California Corporation Code section 313. Alternatively, the *Bid Proposal* may attach a resolution of the corporation, certified by the secretary or assistant secretary under corporate seal, empowering the officer(s) signing the *Bid Proposal* to bind the corporation. A *Bid Proposal* submitted by a limited liability company must be signed with the legal name of the company followed by the signature or signatures required by the company's Articles of Organization.

9. **Bid Security.** Each *Bid Proposal* must be accompanied by bid security of ten percent of the maximum bid amount, in the form of a cashier's check, a certified check, or a bid bond, using the form included in the Contract Documents, executed by a surety licensed to do business in the State of California, made payable to the City of Brentwood. The bid security must guarantee that upon award of the bid, the bidder will execute and submit the *Contract* on the form included in the Contract Documents, will submit payment and performance bonds for 100% of the maximum Contract Price, and will submit the insurance certificates and endorsements as required by the Contract Documents within ten days after issuance of the notice of award.

10. **Withdrawal of Bid Proposals.** A *Bid Proposal* may not be withdrawn for a period of 90 days after the bid opening without forfeiture of the bid security, except as authorized for material error under Public Contract Code Section 5100 et seq.

11. **Bid Protest.** Any bid protest must be in writing and received by City Clerk's Office at 150 City Park Way, Brentwood, CA 94513 before 5:00 p.m. no later than two Working Days following bid opening (the "Bid Protest Deadline") and must comply with the following requirements:

    11.1 General. Only a bidder who has actually submitted a *Bid Proposal* is eligible to submit a bid protest against another bidder. Subcontractors are not eligible to submit bid protests. A bidder may not rely on the bid protest submitted by another bidder, but must timely pursue its own protest. If required by City, the protesting bidder must submit a non-refundable fee in the amount specified by City, based upon City's reasonable costs to administer the bid protest. Any such fee must be submitted to City no later than the Bid Protest Deadline, unless otherwise specified.

    11.2 Protest Contents. The bid protest must contain a complete statement of the basis for the protest and all supporting documentation. Material submitted after the Bid Protest Deadline will not be considered. The protest must refer to the specific portion or portions of the Contract Documents upon which the protest is based. The protest must include the name, address, email address, and telephone number of the person representing the protesting bidder if different from the protesting bidder.

    11.3 Copy to Protested Bidder. A copy of the protest and all supporting documents must be concurrently transmitted by fax or by email, by or before the Bid Protest Deadline, to the protested bidder and any other bidder who has a reasonable prospect of receiving an award depending upon the outcome of the protest.

11.4 Response to Protest. The protested bidder may submit a written response to the protest, provided the response is received by City before 5:00 p.m., within two Working Days after the Bid Protest Deadline or after actual receipt of the bid protest, whichever is sooner (the "Response Deadline"). The response must include all supporting documentation. Material submitted after the Response Deadline will not be considered. The response must include the name, address, email address, and telephone number of the person representing the protested bidder if different from the protested bidder.

11.5 Copy to Protesting Bidder. A copy of the response and all supporting documents must be concurrently transmitted by fax or by email, by or before the Response Deadline, to the protesting bidder and any other bidder who has a reasonable prospect of receiving an award depending upon the outcome of the protest.

11.6 Exclusive Remedy. The procedure and time limits set forth in this section are mandatory and are the bidder's sole and exclusive remedy in the event of bid protest. A bidder's failure to comply with these procedures will constitute a waiver of any right to further pursue a bid protest, including filing a Government Code Claim or initiation of legal proceedings.

11.7 Right to Award. City reserves the right to award the Contract to the bidder it has determined to be the responsible bidder submitting the lowest responsive bid, and to issue a notice to proceed with the Work notwithstanding any pending or continuing challenge to its determination.

12. Rejection of Bids; Award of Contract. City reserves the right, acting in its sole discretion, to waive immaterial bid irregularities, the right to accept or reject any and all bids, or to abandon the Project entirely. The Contract will be awarded, if at all, within 90 calendar days after opening of bids or as otherwise specified in the Special Conditions, to the responsible bidder that submitted the lowest responsive bid.

13. Bonds. The successful bidder is required to submit payment and performance bonds as specified in the Contract Documents using the bond forms included in the Contract Documents. All required bonds must be calculated on the maximum total Contract price as awarded, including additive alternates, if applicable.

14. Evidence of Responsibility. Within 24 hours following a request by City, a bidder must submit to the City satisfactory evidence showing the bidder's financial resources, the bidder's experience in the type of work being required by the City, the bidder's organization available for the performance of the Contract and any other required evidence of the bidder's qualifications to perform the proposed Contract. The City may consider such evidence before making its decision awarding the proposed Contract.

15. License(s). The successful bidder and its Subcontractor(s) must possess the California contractor's license(s) in the classification(s) required by law to perform the Work, and must also obtain a City of Brentwood business license before performing any Work on the Project. These licenses must remain in effect at all times while Work is being performed on the Project.

16. Ineligible Subcontractor. Any subcontractor who is ineligible to perform work on a public works project under Labor Code Sections 1777.1 or 1777.7 is prohibited from performing Work on this Project.

17. DIR Registration. City will not accept a *Bid Proposal* from or enter into a contract with a bidder without proof that the bidder and its subcontractors are registered with the DIR to perform public work under Labor Code Section 1725.5, subject to limited legal exceptions.

18. Bid Schedule. Each bidder must fully complete the *Bid Schedule* form accompanying the *Bid Proposal* form with unit prices as indicated, and must submit the completed *Bid Schedule* with its *Bid Proposal*.

18.1 Incorrect Totals. In the event of a discrepancy between the actual total of the itemized or unit prices shown on the *Bid Schedule* for the base bid, and the amount entered as the base bid on the *Bid Proposal* form, the actual total of the itemized or unit prices shown on the *Bid Schedule* for the base bid will be deemed the base bid price. Likewise, in the event of a discrepancy between the actual total of the itemized or unit prices shown on the *Bid Schedule* for any bid alternate, and the amount entered for the alternate on the *Bid Proposal* form, the actual total of the itemized prices shown on the *Bid Schedule* for that alternate will be deemed the alternate price. Nothing in this provision is intended to prevent a bidder from requesting to withdraw its bid for material error under Public Contract Code Section 5100 et seq.

18.2 Estimated Quantities. The quantities shown on the *Bid Schedule* are estimated and the actual quantities required to perform the Work may be greater or less than the estimated amount. The Contract Price will be adjusted to reflect the actual quantities required for the Work based on the itemized or unit prices provided in the *Bid Schedule*, with no allowance for anticipated profit for quantities that are deleted or decreased.

18.3 Additive and Deductive Alternates. As required by Public Contract Code Section 20103.8, if this bid solicitation includes additive or deductive items, the method below will be used to determine the lowest bid. City retains the right to add to or deduct from the Contract any of the additive or deductive alternates included in the *Bid Proposal*.

The lowest bid will be the lowest bid price on the base contract without consideration of the prices on the additive or deductive items.

19. Post-Award Requests for Information. *After the Contract is awarded, the Contractor must submit written requests for information to:*

Steve Kersevan, Project Manager
City of Brentwood
Public Works – Engineering Division
Phone: (925) 516-5420 Fax: (925) 516-5421
150 City Park Way
Brentwood, CA 94513
engineering@brentwoodca.gov

BIDDER'S REQUEST FOR INFORMATION FORM

2016 Pavement Management Program and Trail Pavement Management
CIP Project Nos. 336-30836 and 352-52413

All requests for information from bidders must be submitted in writing using this form. Fax or email the completed form to: City of Brentwood
Fax: (925) 516-5421
Email: engineering@brentwoodca.gov

COMPANY NAME: _____

CONTACT: _____

COMPANY ADDRESS: _____

_____

_____

Question/Information Requests:

Please use the spaces below to clearly set forth each separate question or request for information, providing specific references to the subject document and provision. Attach additional sheets as necessary, continuing with sequential numbering for each request.

1. _____

_____

2. _____

_____

3. _____

_____

4. _____

_____

5. _____

_____

6. _____

_____

BID PROPOSAL

_____ ("Bidder") hereby submits this *Bid Proposal* to the City of Brentwood ("City") for its 2016 Pavement Management Program and Trail Pavement Management ("Project") in response to the *Notice Inviting Bids*

1. Base Bid. Bidder proposes to perform and fully complete the Work for the Project as specified in the Contract Documents, within the time required for full completion of the Work, for the following price ("Base Bid"):
$ _____. *[Note: The amount entered should be identical to the amount provided as "Total Base Bid" on the final page of the Bid Schedule.]*

Bid Alternate. Bidder submits the following prices for the specified bid alternate: Bidder proposes to perform and fully complete the Work for the Project as specified in the Contract Documents, within the time required for full completion of the Work, for the following price ("Bid Alternate"):
$ _____. *[Note: The amount entered should be identical to the amount provided as "Total Bid Alternate" on the final page of the Bid Schedule.]*

The lowest bid will be the lowest bid price on the base contract without consideration of the prices on the additive or deductive items.

2. Addenda. Bidder acknowledges receipt of the following addenda:

Addendum:	Date Received:	Addendum:	Date Received:
#01	_____	#04	_____
#02	_____	#05	_____
#03	_____	#06	_____

3. Bidder's Warranties. By signing and submitting this *Bid Proposal*, Bidder warrants the following:

3.1 Examination of Contract Documents. Bidder has thoroughly examined the Contract Documents, and represents that, to the best of Bidder's knowledge there are no errors, omissions, or discrepancies in the Contract Documents subject to the limitations of Public Contract Code Section 1104.

3.2 Examination of Worksite. Bidder has had the opportunity to examine the Worksite and local conditions at the Project location.

3.3 Bidder is Qualified. Bidder is fully qualified to perform the Work.

3.4 Responsibility for Bid. Bidder has carefully reviewed this *Bid Proposal* and is solely responsible for any errors or omissions contained in its completed Bid.

4. Award of Contract. By signing and submitting this *Bid Proposal*, Bidder agrees that if Bidder is awarded the Contract for the Project, that within ten days following issuance of the Notice of Award to Bidder, Bidder will do all of the following:

REFERENCE ONLY

4.1 Execute Contract. Enter into the Contract with City in accordance with the terms of this *Bid Proposal*, by signing and submitting to City the *Contract* prepared by City using the form included with the Contract Documents;

4.2 Submit Required Bonds. Submit to City the *Payment Bond* and the *Performance Bond*, each for 100% of the Contract Price, using the bond forms provided and in accordance with the requirements of the Contract Documents; and

4.3 Insurance Requirements. Submit to City the insurance certificate(s) and endorsement(s) as required by the Contract Documents.

5. Bid Security. As a guarantee that if awarded the Contract, it will perform its obligations under Section 4, above, Bidder is enclosing bid security in the amount of ten percent of its maximum bid amount in the following form:

____ A cashier's check or certified check payable to City and issued by _____ Bank in the amount of $_____.

____ A bid bond, using the *Bid Bond* form included with the Contract Documents, payable to City and executed by a surety licensed to do business in the State of California.

This *Bid Proposal* is hereby submitted on _____, 20____:

s/_____* _____
Name and Title [print]

s/_____** _____
Name and Title [print]

_____	_____
Company Name	Calif. License # and Classification
_____	_____
Address	Phone
_____	_____
City, State, Zip	Fax

If required by City, a notarized acknowledgment of execution by Bidder must be attached to the *Bid Proposal*. If a Bidder is a corporation, the *Bid Proposal* must be signed by one corporate officer from each of the following two groups.

***Group A.**	****Group B.**
Chairman,	Secretary,
President, **or**	Assistant Secretary,
Vice-President	CFO **or** Assistant Treasurer

Otherwise, the corporation **must** attach a resolution certified by the secretary or assistant secretary under corporate seal empowering the officer(s) signing to bind the corporation.

REFERENCE ONLY

BID SCHEDULE

2016 Pavement Management Program and Trail Pavement Management
CIP Project Nos. 336-30836 and 352-52413

This *Bid Schedule* must be completed in ink and must be included with the sealed *Bid Proposal*. The unit cost for each item must be inclusive of all costs, whether direct or indirect, including profit and overhead. The sum of all amounts entered in the "Extended Total Amount" column must be identical to the Base Bid price entered in Section 1 of the *Bid Proposal* Form. See Section 18 of the *Instructions to Bidders*.

BID ITEM NO.	ITEM DESCRIPTION	EST. QTY.	UNIT	UNIT COST	EXTENDED TOTAL AMOUNT
1	Traffic Control, Construction Area Signs, Flyers, Mailers and Notifications	1	LS	$	$
2	Mobilization	1	LS	$	$
3	Type II Slurry Seal	231,000	SY	$	$
4	Asphalt Pavement Overcoat (Trails & Parking Lot)	17,600	SY	$	$
5	2" Grind and Overlay	205,000	SF	$	$
6	4" Grind and Overlay	19,300	SF	$	$
7	Reconstruct Handicap Ramp	28	EA	$	$
8	Surface Applied Truncated Domes	12	EA	$	$
9	Subsurface Drain	930	LF	$	$
10	Pavement Markings (White, Yellow, or Blue) Thermoplastic	4,200	SF	$	$
11	12" Wide Stripe (White) (Thermoplastic)	7,200	LF	$	$
12	12" Wide Stripe (Yellow) (Thermoplastic)	820	LF	$	$
13	Detail 2 (Thermoplastic)	1120	LF	$	$
14	Detail 9 (Thermoplastic)	1,200	LF	$	$
15	Detail 12 (Thermoplastic)	5,950	LF	$	$
16	Detail 21 (Thermoplastic)	620	LF	$	$
17	Detail 22 (Thermoplastic)	8,300	LF	$	$
18	Detail 24 (Thermoplastic)	17,900	LF	$	$
19	Detail 27B (Thermoplastic)	1,850	LF	$	$
20	Detail 32 (Thermoplastic)	250	LF	$	$
21	Detail 38 (Thermoplastic)	4,800	LF	$	$
22	Detail 39 & 39A (Thermoplastic)	19,000	LF	$	$
23	Blue Fire Hydrant Marker	114	EA	$	$
24	Bike Lane Symbol and Arrow	55	EA	$	$
25	Adjust Existing Facilities to Grade	53	EA	$	$
26	Traffic Signal Detector Loops	19	EA	$	$

REFERENCE ONLY

TOTAL BASE BID: Items 1 through 26 inclusive: $_____

[Note: The amount entered as the "Total Base Bid" should be identical to the Base Bid amount entered in Section 1 of the Bid Proposal form.]

BID ALTERNATE

BID ITEM NO.	ITEM DESCRIPTION	QTY	UNIT	UNIT COST	EXTENDED TOTAL AMOUNT
A1	Traffic Control, Construction Area Signs, Flyers, Mailers and Notifications	1	LS	$	$
A2	Mobilization	1	LS	$	$
A3	Type II Slurry Seal	39,200	SY	$	$
A4	2" Grind and overlay	94,600	SF	$	$
A5	Reconstruct Handicap Ramp	9	EA	$	$
A6	Surface Applied Truncated Domes	3	EA	$	$
A7	Pavement Markings (White, Yellow, or Blue) Thermoplastic	680	SF	$	$
A8	12" Wide Stripe (White) (Thermoplastic)	390	LF	$	$
A9	12" Wide Stripe (Yellow) (Thermoplastic)	220	LF	$	$
A10	Detail 12 (Thermoplastic)	5,920	LF	$	$
A11	Detail 22 (Thermoplastic)	220	LF	$	$
A12	Detail 24 (Thermoplastic)	6,600	LF	$	$
A13	Detail 27B (Thermoplastic)	2,390	LF	$	$
A14	Detail 29 (Thermoplastic)	710	LF	$	$
A15	Detail 37B (Thermoplastic)	30	LF	$	$
A16	Detail 38 (Thermoplastic)	1,570	LF	$	$
A17	Detail 39 and 39A (Thermoplastic)	5,810	LF	$	$
A18	Detail 40 (Thermoplastic)	140	LF	$	$
A19	Bike Lane Symbol and Arrow	7	EA	$	$
A20	Blue Fire Hydrant Marker	8	EA	$	$
A21	Adjust Existing Facilities to Grade	49	EA	$	$

TOTAL BID ALTERNATE: Items A1 through A21 inclusive: $_____

[Note: The amount entered as the "Total Bid Alternate" should be identical to the Bid Alternate amount entered in Section 1 of the Bid Proposal form.]

BIDDER NAME: _____

REFERENCE ONLY

SUBCONTRACTOR LIST

2016 Pavement Management Program and Trail Pavement Management
CIP Project Nos. 336-30836 and 352-52413

For each Subcontractor who will perform a portion of the Work in an amount in excess of one-half of 1% of the Bidder's total Contract Price,[1] the bidder must list the Subcontractor's name and address for its place of business, its California contractor license number, DIR registration number, a description of the Subcontractor's work and the subcontract price, and the percentage of work to be performed by that Subcontractor. **The Contractor must perform at least 50% of the Work with its own forces.**

SUBCONTRACTOR NAME AND ADDRESS	CA CONTRACTOR LICENSE NUMBER	DIR REG. NO.	DESCRIPTION OF WORK AND SUBCONTRACT PRICE	PERCENT OF TOTAL WORK

[1] For street or highway construction this requirement applies to any subcontract of $10,000 or more.

REFERENCE ONLY

NONCOLLUSION DECLARATION

2016 Pavement Management Program and Trail Pavement Management
CIP Project Nos. 336-30836 and 352-52413

REFERENCE ONLY

TO BE EXECUTED BY BIDDER AND SUBMITTED WITH BID

The undersigned declares:

I am the _____ of _____, the party making the foregoing bid.

The bid is not made in the interest of, or on behalf of, any undisclosed person, partnership, company, association, organization, or corporation. The bid is genuine and not collusive or sham. The bidder has not directly or indirectly induced or solicited any other bidder to put in a false or sham bid. The bidder has not directly or indirectly colluded, conspired, connived, or agreed with any bidder or anyone else to put in a sham bid, or to refrain from bidding. The bidder has not in any manner, directly or indirectly, sought by agreement, communication, or conference with anyone to fix the bid price of the bidder or any other bidder, or to fix any overhead, profit, or cost element of the bid price, or of that of any other bidder. All statements contained in the bid are true. The bidder has not, directly or indirectly, submitted his or her bid price or any breakdown thereof, or the contents thereof, or divulged information or data relative thereto, to any corporation, partnership, company, association, organization, bid depository, or to any member or agent thereof, to effectuate a collusive or sham bid, and has not paid and will not pay, any person or entity for such purpose.

This declaration is intended to comply with California Public Contract Code Section 7106 and Title 23 U.S.C Section 112.

I declare under penalty of perjury under the laws of the State of California that the foregoing is true and correct and that this declaration is executed on _____ [date], at _____ [city], _____ [state].

s/_____

_____
Name and Title [print]

BID BOND

_____ ("Bidder") has submitted a bid, dated _____, 20_____ ("Bid"), to the City of Brentwood ("City") for work on the 2016 Pavement Management Program (Slurry Seal) and Trail Pavement Management ("Project"). Under this duly executed bid bond ("Bid Bond"), Bidder as Principal and _____, its surety ("Surety"), are bound to City as obligee in the penal sum of ten percent of the maximum amount of the Bid (the "Bond Sum"). Bidder and Surety bind themselves and their respective heirs, executors, administrators, successors and assigns, jointly and severally, as follows:

1. General. If Bidder is awarded the Contract for the Project, Bidder will enter into the Contract with the City in accordance with the terms of the Bid.

2. Submittals. Within ten days following issuance of the notice of award to Bidder, Bidder must submit to City the following:

2.1 Contract. The executed *Contract*, using the form provided by City in the Project Contract Documents ("Contract Documents");

2.2 Payment Bond. A payment bond for 100% of the maximum Contract Price, executed by a surety licensed to do business in the State of California using the *Payment Bond* form included with the Contract Documents;

2.3 Performance Bond. A performance bond for 100% of the maximum Contract Price, executed by a surety licensed to do business in the State of California using the *Performance Bond* form included with the Contract Documents; and

2.4 Insurance. The insurance certificate(s) and endorsement(s) required by the Contract Documents, and any other documents required under the *Instructions for Bidders*.

3. Enforcement. If Bidder fails to execute the *Contract* and to submit the bonds and insurance certificates as required by the Contract Documents, Surety guarantees that Bidder forfeits the Bond Sum to City. Any notice to Surety may be given in the manner specified in the *Contract* and delivered or transmitted to Surety as follows:

Attn: _____

Address: _____

City/State/Zip: _____

Phone: _____

Fax: _____

Email: _____

4. Duration; Waiver. If Bidder fulfills its obligations under Section 2, above, then this obligation will be null and void; otherwise it will remain in full force and effect for 90 days following award of the Contract or until this *Bid Bond* is returned to Bidder, whichever occurs first. Surety waives the provisions of Civil Code Sections 2819 and 2845.

REFERENCE ONLY

This Bid Bond is entered into and effective on _____, 20_____.

SURETY:

_____

s/ _____

Name: _____

Title: _____

(Attach Acknowledgement, Notary Seal, and Attorney-In-Fact Certificate)

CONTRACTOR:

_____

s/ _____

Name: _____

Title: _____

REFERENCE ONLY

BIDDER'S QUESTIONNAIRE

2016 Pavement Management Program and Trail Pavement Management
CIP Project Nos. 336-30836 and 352-52413

After the bids have been opened, the City may request a completed, signed *Bidder's Questionnaire* from one or more of the apparent low bidders. The *Bidder's Questionnaire* must be submitted within 48 hours of the City's request, using this form and attaching additional pages as required. City may use the completed Questionnaire to evaluate the Bidder's qualifications for this Project. The Questionnaire must be filled out completely, accurately, and legibly. Any delay, errors, omissions, or misrepresentations in completion of the Questionnaire may be grounds for rejection of the bid or termination of the Contract.

Part 1: General Information

Bidder Name: _____ ("Bidder")

Check One: ___ Corporation
___ Partnership
___ Sole Proprietorship
___ Joint Venture of:_____
___ Other:_____

Contact Person: _____

Part 2: Bidder Experience

1. How many years has Bidder been in business under its present business name?

_____

2. Has Bidder completed projects similar in type and size to this Project as a general contractor?

_____

3. Has Bidder ever been disqualified on grounds that it is not responsible?
Yes_____ No_____

If yes, provide additional information on a separate sheet of paper regarding the disqualification, including the name and address of the agency or City of the subject project, the type and size of the project, the reasons that Bidder was disqualified as not responsible, and the month and year in which the disqualification occurred.

4. Has Bidder ever been terminated from a construction project, either as a general contractor or as a subcontractor? Yes_____ No_____

If yes, provide additional information on a separate sheet of paper regarding the termination, including the name and address of the agency or City of the subject project, the type and size of the project, whether Bidder was under contract as a prime contractor or a subcontractor, the reasons that Bidder was terminated, and the month and year in which the termination occurred.

REFERENCE ONLY

5. Provide information about Bidder's past projects performed as general contractor as follows:

   5.1 Six most recently completed public works projects within the last three years;

   5.2 Three largest completed projects within the last three years; and

   5.3 Any project which is similar to this Project.

6. Using separate sheets of paper attached to this Questionnaire, provide all of the following information for <u>each</u> project identified in response to the above three categories:

   6.1. Project Name
   6.2. Location
   6.3. City
   6.4. City Contact (name and current phone number)
   6.5. Architect or Engineer Name
   6.6. Architect or Engineer Contact (name and current phone number)
   6.7. Construction Manager (name and current phone number)
   6.8. Description of Project, Scope of Work Performed
   6.9. Initial Contract Value (at time of bid award)
   6.10. Final Cost of Construction (including change orders)
   6.11. Original Scheduled Completion Date
   6.12. Time Extensions Granted (number of days)
   6.13. Actual Date of Completion
   6.14. Number and amount of Stop Notices or Mechanic's Liens filed
   6.15. Amount of liquidated damages assessed against Bidder
   6.16. Nature and resolution of any claim, lawsuit, and/or arbitration between Bidder and the City

Part 3: Verification

In signing this document, I, the undersigned, declare that I am duly authorized to sign and submit this *Bidder's Questionnaire* on behalf of the named Bidder, and that all responses and information set forth in this *Bidder's Questionnaire* and accompanying attachments are, to the best of my knowledge, true, accurate and complete as of the date of submission. **I declare under penalty of perjury under the laws of the State of California that the foregoing is true and correct.**

Signature: _____ Date: _____

By [name, title]: _____

For [name of Bidder]: _____

REFERENCE ONLY

CONTRACT

2016 Pavement Management Program and Trail Pavement Management
CIP Project Nos. 336-30836 and 352-52413

This public works contract ("Contract") is entered into by and between the City of Brentwood ("City") and _____ ("Contractor") for work on the 2016 Pavement Management Program and Trail Pavement Management ("Project").

The parties agree as follows:

1. **Award of Contract**. In response to the *Notice Inviting Bids*, Contractor has submitted a *Bid Proposal* to perform work on the Project, and on _____, 20___, the Brentwood City Council authorized award of this Contract to Contractor for the amount of Contractor's bid.

2. **Contract Documents**. The Contract Documents incorporated into this Contract include and are comprised of all of the following:

2.1 Notice Inviting Bids;
2.2 Instructions for Bidders;
2.3 Addenda, if any;
2.4 Bid Proposal and required attachments;
2.5 Contract;
2.6 Payment and Performance Bonds;
2.7 General Conditions;
2.8 Special Conditions;
2.9 Project Drawings and Specifications;
2.10 Change Orders, if any;
2.11 Notice of Award;
2.12 Notice to Proceed;
2.13 Brentwood Standard Plans and Specifications;
2.14 And the following: No other documents

3. **Contractor's Obligations.** Contractor agrees to perform all of the Work required for the Project, as specified in the Contract Documents. Contractor must provide, furnish, and supply all things necessary and incidental for the timely performance and completion of the Work, including all necessary labor, materials, equipment, transportation, and utilities, unless otherwise specified in the Contract Documents. Contractor must use its best efforts to complete the Work in a professional and expeditious manner and to meet or exceed the performance standards required by the Contract Documents.

4. **Payment.** As full and complete compensation for Contractor's timely performance and completion of the Work in strict accordance with the terms and conditions of the Contract Documents, City will pay Contractor _____ Dollars ($_____) (the "Contract Price"), in accordance with the payment provisions in the *General Conditions*.

5. **Time for Completion.** Contractor will fully complete the Work for the Project within 40 Working days from the commencement date given in the Notice to Proceed ("Contract Time"). By signing below, Contractor expressly waives any claim for delayed early completion.

6. **Liquidated Damages.** If Contractor fails to complete the Work within the Contract Time, City will assess liquidated damages in the amount of Two Hundred Fifty Dollars ($250) for each day of unexcused delay in completion, and the Contract Price will be reduced accordingly.

7. **Labor Code Compliance.**

   7.1 General. This Contract is subject to all applicable requirements of Chapter 1 of Part 7 of Division 2 of the Labor Code, including requirements pertaining to wages, working hours and workers' compensation insurance.

   7.2 Prevailing Wages. This Project is subject to the prevailing wage requirements applicable to the locality in which the Work is to be performed for each craft, classification or type of worker needed to perform the Work, including employer payments for health and welfare, pension, vacation, apprenticeship and similar purposes. Copies of these prevailing rates are available online at http://www.dir.ca.gov/DLSR.

   7.3 DIR Registration. City will not accept a *Bid Proposal* from or enter into a contract with a bidder without proof that the bidder and its Subcontractors are registered with the California Department of Industrial Relations ("DIR") to perform public work under Labor Code Section 1725.5, subject to limited legal exceptions.

8. **Workers' Compensation Certification.** Under Labor Code Section 1861, by signing this *Contract*, Contractor certifies as follows: "I am aware of the provisions of Labor Code Section 3700 which require every employer to be insured against liability for workers' compensation or to undertake self-insurance in accordance with the provisions of that code, and I will comply with such provisions before commencing the performance of the Work on this Contract."

9. **Notice.** Any notice, billing, or payment required by the Contract Documents must be made in writing, and sent to the other party by personal delivery, U.S. Mail, a reliable overnight delivery service, facsimile, or by email as a PDF (or comparable) file. Notice is deemed effective upon delivery unless otherwise specified. Notice for each party must be given as follows:

	City of Brentwood	**Contractor**
Name/Title	Steve Kersevan	
Address	150 City Park Way	
City/state/zip	Brentwood/CA 94513	
Phone	925-516-5420	
Fax	925-516-5421	
Email	engineering@brentwoodca.gov	

10. General Provisions.

10.1 Assignment and Successors. Contractor may not assign its rights or obligations under this Contract, in part or in whole, without City's written consent. This Contract is binding on Contractor's successors and permitted assigns.

10.2 Third Party Beneficiaries. There are no intended third party beneficiaries to this Contract except as expressly provided in the *General Conditions* or *Special Conditions*.

10.3 Governing Law and Venue. This Contract will be governed by California law and venue will be in the California Superior Court in Contra Costa County, and no other place.

10.4 Amendment. No amendment or modification of this Contract will be binding unless it is in a writing duly authorized and signed by the parties to this *Contract*.

10.5 Integration; Severability. This Contract and the Contract Documents incorporated herein, including authorized amendments or Change Orders thereto, constitute the final, complete, and exclusive terms of the agreement between City and Contractor. If any provision of the Contract Documents, or portion of a provision, is determined to be illegal, invalid, or unenforceable, the remaining provisions of the Contract Documents will remain in full force and effect.

10.6 Authorization. Each individual signing below warrants that he or she is authorized to do so by the party that he or she represents, and that this Contract is legally binding on that party. If Contractor is a corporation, signatures from two officers of the corporation are required pursuant to California Corporation Code Section 313. Alternatively, the Contractor may attach a resolution of the corporation, certified by the secretary or assistant secretary under corporate seal, empowering the officer(s) signing the Contract to bind the corporation.

[Signatures are on the following page.]

The parties agree to this Contract as witnessed by the signatures below:

CONTRACTOR:

* By: _____

Printed Name: _____

Title: _____

** By: _____

Printed Name: _____

Title: _____

CITY OF BRENTWOOD:

By: _____
Gustavo "Gus" Vina, City Manager

ATTEST:

By: _____
Margaret Wimberly, MMC, City Clerk

APPROVED AS TO FORM:

By: _____
Damien Brower, City Attorney

If required by City, a notarized acknowledgment of execution by Contractor must be attached. If a Contractor is a corporation, Contract must be signed by one corporate officer from each of the following two groups.

***Group A.**
Chairman,
President, **or**
Vice-President

****Group B.**
Secretary,
Assistant Secretary,
CFO **or** Assistant Treasurer

Otherwise, the corporation **must** attach a resolution certified by the secretary or assistant secretary under corporate seal empowering the officer(s) signing to bind the corporation.

Date: _____

_____
Contractor's Calif. License Number(s)

Seal:

_____
Expiration Date(s)

PAYMENT BOND

The City of Brentwood ("City") and _____ ("Contractor") have entered into a contract, dated _____, 20___ ("Contract") for work on the 2016 Pavement Management Program and Trail Pavement Management ("Project"). The Contract is incorporated by reference into this *Payment Bond* ("Bond").

1. **General.** Under this Bond, Contractor as principal and _____, its surety ("Surety"), are bound to City as obligee in an amount not less than ($_____) ("Bond Sum"), under California Civil Code Sections 9550, et seq.

2. **Surety's Obligation.** If Contractor or any of its Subcontractors fails to pay any of the persons named in California Civil Code Section 9100 amounts due under the Unemployment Insurance Code with respect to work or labor performed under the Contract, or for any amounts required to be deducted, withheld, and paid over to the Employment Development Department from the wages of employees of the Contractor and its Subcontractors, under California Unemployment Insurance Code Section 13020, with respect to the work and labor, then Surety will pay for the same.

3. **Beneficiaries.** This Bond inures to the benefit of any of the persons named in California Civil Code Section 9100, so as to give a right of action to those persons or their assigns in any suit brought upon this Bond. Contractor must promptly provide a copy of this Bond upon request by any person with legal rights under this Bond.

4. **Duration.** If Contractor promptly makes payment of all sums for all labor, materials, and equipment furnished for use in the performance of the Work required by the Contract, in conformance with the time requirements set forth in the Contract and as required by California law, Surety's obligations under this Bond will be null and void. Otherwise, Surety's obligations will remain in full force and effect.

5. **Waivers.** Surety waives any requirement to be notified of alterations to the *Contract* or extensions of time for performance of the Work under the Contract. Surety waives the provisions of Civil Code Sections 2819 and 2845. City waives requirement of a new bond for any supplemental contract under Civil Code Section 9550. Any notice to Surety may be given in the manner specified in the Contract and delivered or transmitted to Surety as follows:

   Attn: _____

   Address: _____

   City/State/Zip: _____

   Phone: _____

   Fax: _____

   Email: _____

6. **Law and Venue.** This Bond will be governed by California law, and any dispute pursuant to this Bond will be venued in the Superior Court of the County in which the Project is

located, and no other place. Surety will be responsible for City's attorneys' fees and costs in any action to enforce the provisions of this Bond.

7. Effective Date; Execution. This Bond is entered into and is effective on _____, 20_____.

SURETY:

_____

s/ _____

Name: _____

Title: _____

(Attach Acknowledgment with Notary Seal and Power of Attorney)

CONTRACTOR:

_____

s/ _____

Name: _____

Title: _____

APPROVED BY CITY:

_____

s/ _____

Name: _____

Title: _____

PERFORMANCE BOND

The City of Brentwood ("City") and _____ ("Contractor") have entered into a contract, dated _____, 20____ ("Contract") for work on the 2016 Pavement Management Program and Trail Pavement Management ("Project"). The Contract is incorporated by reference into this *Performance Bond* ("Bond").

1. **General.** Under this Bond, the Contractor as Principal and _____, its surety ("Surety"), are bound to City as obligee for an amount not less than Dollars ($_____) (the "Bond Sum"). By executing this Bond, Contractor and Surety bind themselves and their respective heirs, executors, administrators, successors and assigns, jointly and severally, to the provisions of this Bond.

2. **Surety's Obligations; Waiver.** If Contractor fully performs its obligations under the Contract, including its warranty obligations under the Contract. Surety's obligations under this Bond will become null and void upon recordation of the notice of completion, provided Contractor has timely provided a warranty bond as required under the Contract. Otherwise Surety's obligations will remain in full force and effect until expiration of the one year warranty period under the Contract. Surety waives any requirement to be notified of and further consents to any alterations to the Contract made under the applicable provisions of the Contract Documents, including changes to the scope of Work or extensions of time for performance of Work under the Contract. Surety waives the provisions of Civil Code Sections 2819 and 2845.

3. **Application of Contract Balance.** Upon making a demand on this Bond, City will make the Contract Balance available to Surety for completion of the Work under the Contract. For purposes of this provision, the "Contract Balance" is defined as the total amount payable by City to the Contractor as the Contract Price minus amounts already paid to Contractor, and minus any liquidated damages, credits, or backcharges to which City is entitled under the terms of the Contract.

4. **Contractor Default.** Upon written notification from City that Contractor is in default under Article 13 of the Contract *General Conditions*, time being of the essence, Surety must act within the time specified in Article 13 to remedy the default through one of the following courses of action:

4.1 Arrange for completion of the Work under the Contract by Contractor, with the City's consent, but only if Contractor is in default solely due to its financial inability to complete the Work;

4.2 Arrange for completion of the Work under the Contract by a qualified contractor acceptable to City, and secured by performance and payment bonds issued by an admitted surety as required by the Contract Documents, at Surety's expense, or

4.3 Waive its right to complete the Work under the Contract and reimburse City the amount of City's costs to have the remaining Work completed.

5. **Surety Default.** If Surety defaults on its obligations under the Bond, City will be entitled to recover all costs it incurs due to Surety's default, including legal, design professional, or delay costs.

6. **Notice.** Any notice to Surety may be given in the manner specified in the Contract and delivered or transmitted to Surety as follows:

Attn: _____

Address: _____

City/State/Zip: _____

Phone: _____

Fax: _____

Email: _____

7. **Law and Venue.** This Bond will be governed by California law, and any dispute pursuant to this Bond will be venued in the Superior Court for the County in which the Project is located, and no other place. Surety will be responsible for City's attorneys' fees and costs in any action to enforce the provisions of this Bond.

8. **Effective Date; Execution.** This Bond is entered into and effective on _____, 20___.

SURETY:

_____

s/ _____

Name: _____

Title: _____

(Attach Acknowledgment with Notary Seal and Power of Attorney)

CONTRACTOR:

_____

s/ _____

Name: _____

Title: _____

WARRANTY BOND

The City of Brentwood ("City") and _____ ("Contractor") have entered into a contract, dated _____, 20___ ("Contract") for work on the 2016 Pavement Management Program and Trail Pavement Management ("Project"). The Contract is incorporated by reference into this *Warranty Bond* ("Bond").

1. **General.** Under this Bond, Contractor as principal and _____, its surety ("Surety"), are bound to City as obligee in the amount of 15% of the final Contract Price, ("Bond Sum").

2. **Warranty Period.** The Contract requires Contractor to guarantee its work and that of its Subcontractors on the Project, against defects in materials or workmanship which are discovered during the one year period commencing with recordation of the Notice of Completion (the "Warranty Period").

3. **Surety's Obligations.** If Contractor faithfully carries out and performs its guarantee under the Contract, and, on due notice from City, repairs and make good at its sole expense any and all defects in materials and workmanship in the Project which are discovered during the Warranty Period, or if Contractor promptly reimburses City for all loss and damage that City sustains because of Contractor's failure to makes such repairs in accordance with the Contract requirements, then Surety's obligations under this Bond will be null and void. Otherwise, Surety's obligations will remain in full force and effect.

4. **Waiver.** Surety waives the provisions of Civil Code Sections 2819 and 2845.

5. **Notice.** Any notice to Surety may be given in the manner specified in the Contract and delivered or transmitted to Surety as follows:

   Attn: _____

   Address: _____

   City/State/Zip: _____

   Phone: _____

   Fax: _____

   Email: _____

6. **Law and Venue.** This Bond will be governed by California law, and any dispute pursuant to this Bond will be venued in the Superior Court in which the Project is located, and no other place. Surety will be responsible for City's attorneys' fees and costs in any action to enforce the provisions of this Bond.

7. **Effective Date; Execution.** This Bond is entered into and is effective on _____, 20_____.

[Signatures are on the following page.]

SURETY:

_____

s/ _____

Name: _____

Title: _____

(Attach Acknowledgment with Notary Seal and Power of Attorney)

CONTRACTOR:

_____

s/ _____

Name: _____

Title: _____

GENERAL CONDITIONS

Article 1 - Definitions

1.1 Definitions. The following definitions apply to all of the Contract Documents unless otherwise indicated. Defined terms and titles of documents are capitalized in the Contract Documents, with the exception of the words "day," "furnish," "including," "install," and "working day" or "work day."

Allowance means an amount included in the *Bid Proposal* for Work that may or may not be included in the Project, depending on conditions that will not become known until after bids are opened. If the Contract Price includes an Allowance and the cost of performing the Work covered by that Allowance is greater or less than the Allowance, the Contract Price will be increased or decreased accordingly.

Article, as used in these *General Conditions*, means a numbered Article of the *General Conditions*, unless otherwise indicated by the context.

Brentwood Standard Plans and Specifications means the most current version, at bid time, of the City's Standard Plans and Specifications.

Caltrans Standard Plans means the most current version at bid time of the Standard Plans of the California Department of Transportation.

Caltrans Standard Specifications means the version of the Standard Specifications of the California Department of Transportation specified in Section 2 of the *Contract* form, subject to the terms and limitations in Section 3.3 of the *General Conditions*.

Change Order means a written document duly approved and executed by City, which changes the scope of Work, the Contract Price, or the Contract Time.

City means the City of Brentwood, acting through its City Council, officers, employees, and authorized representatives.

City Engineer means the City Engineer and Director of Public Works for the City of Brentwood acting directly or through a duly authorized agent, which may be an employee of the City or an outside consultant.

Claim means a separate demand by Contractor for change in the Contract Time or Contract Price, that has previously been submitted to City in accordance with the requirements of the Contract Documents, and which has been rejected by City, in whole or in part; or a written demand by Contractor objecting to the amount of Final Payment.

Contract means the signed agreement between City and Contractor.

Contract Documents means, collectively, all of the documents listed as such in Section 2 of the *Contract*, including the *Notice Inviting Bids*; the *Instructions for Bidders*; addenda, if any; the *Bid Proposal*, and attachments thereto; the *Contract*; the notice of award and notice to proceed; the payment and performance bonds; the *General*

Conditions; the *Special Conditions*; the Project Drawings and Specifications; any Change Orders; and any other documents expressly made part of the Contract Documents.

Contract Price means the total compensation to be paid to the Contractor for performance of the Work, as set forth in the *Contract* and as amended by Change Order or adjusted for an Allowance. The Contract Price is not subject to adjustment due to inflation or due to the increased cost of labor, material, or equipment following submission of the *Bid Proposal*.

Contract Time means the number of Working Days for performance of the Work, as set forth in the *Contract* and as amended by Change Order.

Contractor means the individual, partnership, corporation, or joint-venture who has signed the *Contract* with City to perform the Work.

Day means a calendar day unless otherwise specified.

Design Professional means the licensed individual(s) or firm(s) retained by City to design the Project and to provide architectural or engineering services to ensure the Project is constructed as intended. If no Design Professional has been retained for this Project, any reference to Design Professional is deemed to refer to the City Engineer.

Drawings means the City-provided plans and graphical depictions of the Project requirements, and does not include Shop Drawings.

Final Completion means the Contractor has fully completed all of the Work required by the Contract Documents, including all punch list items, any required commissioning, and has provided all required submittals, including the *Warranty Bond*, instructions and manuals, and as-built drawings to the City's satisfaction.

Final Payment means payment to Contractor of the unpaid Contract Price, including release of undisputed retention, less amounts withheld pursuant to the Contract Documents, including liquidated damages, up to 125% of the amount of any unreleased stop notice, amounts subject to setoff, up to 150% of any unresolved third-party claim for which Contractor is required to indemnify City, and up to 150% of any amount in dispute as authorized by Public Contract Code Section 7107.

Furnish means to purchase and deliver to the Worksite designated for installation.

Hazardous Materials means any substance or material identified now or in the future as hazardous under any federal, state, or local law or regulation, or any other substance or material that may be considered hazardous or otherwise subject to statutory or regulatory requirements governing handling, disposal, or cleanup.

Including means "including, but not limited to," unless the context requires otherwise.

Inspector means the individual(s) or firm(s) retained by City to inspect the workmanship, materials, and manner of construction of the Project and its components to ensure compliance with the Contract Documents and all applicable codes, regulations, and permits.

Install means to fix in place for materials, and to fix in place and connect for equipment.

Project means the public works project referenced in the *Contract*.

Project Manager means the individual designated by City to oversee and manage the Project on City's behalf and may include his or her authorized delegee(s) when the Project Manager is unavailable.

Section as used in these *General Conditions*, means a numbered Section of the *General Conditions*, unless otherwise indicated by the context.

Shop Drawings means drawings, plan details or other graphical depictions prepared by or on behalf of Contractor, and subject to City approval, which are intended to provide details for fabrication, installation, and the like, of items required by or shown in the Drawings and Specifications.

Specifications means the technical, text specifications describing the Project requirements, which are prepared for and incorporated into this Project by or on behalf of City, and does not include the *Contract*, *General Conditions* or *Special Conditions*.

Subcontractor means an individual, partnership, corporation, or joint-venture retained by Contractor directly or indirectly through a subcontract to perform a specific portion of the Work. The term Subcontractor applies to subcontractors, suppliers, fabricators, and equipment lessors of all tiers, unless otherwise indicated by the context.

Technical Specifications means Specifications.

Work means all of the construction and services necessary or incidental to completing the Project in conformance with the requirements of the Contract Documents.

Working Day or Work Day means a day that City is open for normal business, excluding weekends and excluding holidays observed by City.

Worksite means the place or places where the Work is performed.

Article 2 - Roles and Responsibilities

2.1 Design Professional.

(A) ***General.*** Design Professional, as the City's representative, is responsible for the overall design of the Project, and to the extent authorized by City, may act on City's behalf to ensure performance of the Work in compliance with the Contract Documents.

(B) ***Interpretation.*** Design Professional will decide all questions pertaining to interpretation of the Drawings or Specifications. The Design Professional's decision regarding interpretation of the Drawings or Specifications is final and conclusive.

2.2 Contractor.

(A) ***General.*** Contractor must provide all labor, materials, equipment and services necessary to perform and timely complete the Work in strict accordance with the Contract Documents, and in an economic and efficient manner in the best interests of City. Contractor is solely responsible for all costs to perform the Work as specified in the Contract Documents, including any Work performed outside the Worksite.

(B) ***Responsibility for the Work.*** Contractor is solely responsible for supervising and directing all aspects of the Work to facilitate the efficient and timely completion of the Work. Contractor is solely responsible for, and required to exercise full control over, construction means, methods, techniques, sequences, procedures, and coordination of all portions of the Work with that of all other Contractors and Subcontractors, except to the extent that the Contract Documents provide other specific instructions.

(C) ***Project Administration.*** Contractor must provide sufficient and competent administration, staff, and skilled workforce necessary to perform and timely complete the Work in accordance with the Contract Documents. Before starting the Work, Contractor must designate in writing and provide complete contact information, including phone numbers and email address, for the officer or employee in Contractor's organization who is to serve as Contractor's primary representative for the Project, and who has authority to act on Contractor's behalf. A Subcontractor may not serve as Contractor's primary representative.

(D) ***On-Site Superintendent.*** Contractor must, at all times during performance of the Work, provide a qualified and competent full-time superintendent, acceptable to City, and assistants, as necessary, who must be physically present at the Project site while any aspect of the Work is being performed. Failure to comply may result in temporary suspension of the Work, at Contractor's sole expense and with no extension of Contract Time, until the superintendent is physically present to supervise the Work. Contractor must provide written notice to City, as soon as practicable, before replacing the superintendent.

(E) ***Standards; Compliance.*** Contractor must, at all times, ensure that the Work is performed in a good workmanlike manner following best practices and in full compliance with the Contract Documents and all applicable laws, regulations, codes, standards, and permits.

(F) ***Responsible Party.*** Contractor is solely responsible to City for the acts or omissions of any party or parties performing portions of the Work or providing equipment, materials or services for or on behalf of Contractor or its Subcontractors.

(G) ***Correction of Defects.*** Contractor must promptly correct, at Contractor's sole expense, any Work that is determined by City, Project Manager, or the Inspector to be deficient or defective in workmanship, materials, and equipment.

(H) ***Contractor's Records.*** Contractor must maintain all of its records relating to the Project in any form, including paper documents, photos, videos and electronic records. Project records subject to this provision include, but are not limited to, Project cost records and records relating to preparation of Contractor's bid.

(1) Contractor's cost records must include all supporting documentation, including original receipts, invoices, and payroll records, evidencing its direct costs to perform the Work, including, but not limited to, costs for labor, materials and equipment. Each cost record should include, at a minimum, a description of the expenditure with references to the applicable requirements of the Contract Documents, the amount actually paid, the date of payment, and whether the expenditure is part of the original Contract Price, related to an executed Change Order, or otherwise categorized by Contractor as extra work. Contractor's failure to comply with this provision as to any claimed cost operates as a waiver of any rights to recover the claimed cost.

(2) Contractor must continue to maintain its Project records in an organized manner for a period of four years after City's acceptance of the Project or following termination, whichever occurs first. Subject to prior notice to Contractor, City is entitled to inspect or audit any of Contractor's Project records relating to the Project or to investigate Contractor's plant or equipment during Contractor's normal business hours.

2.3 Subcontractors.

(A) ***General.*** Contractor must perform at least 50% of the Work with its own forces, as measured by the Contract Price. All Work which is not performed by Contractor with its own forces must be performed by qualified Subcontractors. City reserves the right to approve or reject any and all Subcontractors proposed to perform the Work.

(B) ***Contractual Obligations.*** Contractor must require every Subcontractor to be bound to the provisions of the Contract Documents as they apply to the Subcontractor's portion(s) of the Work, and to likewise bind their subcontractors or suppliers. Nothing in these Contract Documents creates a contractual relationship between a Subcontractor and City, but City is deemed to be a third-party beneficiary of the contract between Contractor and each Subcontractor.

(C) ***Termination of Contract.*** If the Contract is terminated, each Subcontractor's agreement must be assigned by Contractor to City, subject to the prior rights of any surety, provided that the City accepts the assignment by written notification, and assumes all rights and obligations of Contractor pursuant to each such subcontract agreement.

(D) ***Substitution of Subcontractor.*** If Contractor requests substitution of a listed Subcontractor under Public Contract Code Section 4107, Contractor is solely responsible for all costs City incurs in responding to the request, including legal fees and costs to conduct a hearing.

(E) ***Rejection of Subcontractor.*** If the City Engineer determines that a Subcontractor is unqualified to perform its Work, is failing to satisfactorily perform its Work, or is

otherwise impeding the progress of the Work, at the request of the City Engineer, that Subcontractor must be permanently removed from the Project and its Work performed by Contractor's own forces or by a duly authorized, qualified Subcontractor. Contractor will be solely responsible for any costs or delays resulting from removal of a Subcontractor under this Section.

2.4 Coordination of Work.

(A) ***Concurrent Work.*** City reserves the right to perform or to have performed other work on or adjacent to the Project site while the Work is being performed. Contractor is responsible for coordinating its Work with other work being performed on or adjacent to the Project site, and must avoid hindering, delaying, or interfering with the work of other contractors and subcontractors. To the full extent permitted by law, Contractor must hold harmless and indemnify City, Design Professional, and Project Manager against any and all claims arising from or related to Contractor's avoidable, negligent, or willful hindrance of, delay to, or interference with the work of another contractor or subcontractor.

(B) ***Defects.*** Before proceeding with any portion of the Work affected by the construction or operations of others, Contractor must give the Project Manager prompt written notification of any defects Contractor discovers which will prevent the proper execution of the Work. Failure to give notice of any such known defects will be deemed acknowledgement by Contractor that the work of others is not defective and will not prevent the proper execution of the Work.

2.5 Submittals. Unless otherwise specified, Contractor must submit to Project Manager for review and approval, all schedules, Shop Drawings, samples, product data and similar submittals required by the Contract Documents, or upon request by the Project Manager. All submittals, including requests for information (RFIs) are subject to the provisions of this Section.

(A) ***General.*** Contractor is responsible for ensuring that its submittals are accurate and conform to the Contract Documents.

(B) ***Time and Manner of Submission.*** Contractor must ensure that its submittals are prepared and delivered in a manner consistent with the current approved schedule for the Work and within the applicable time specified elsewhere in the Contract Documents, or if no time is specified, in such time and sequence so as not to delay the performance of the Work or completion of the Project.

(C) ***Required Contents.*** Each submittal must include the Project name and contract number, Contractor's name and address, the name and address of any Subcontractor or supplier involved with the submittal, the date, and references to applicable Specification section(s) and/or drawing and detail number(s).

(D) ***Required Corrections.*** If corrections are required, Contractor must promptly make and submit any required corrections in full conformance with the requirements of this Section.

(E) ***Effect of Review and Approval.*** Review and approval of a submittal by the Design Professional will not relieve Contractor from complying with the requirements of the Contract Documents.

(F) ***Enforcement.*** Any Work performed or material used without prior approval of a required submittal will be performed at Contractor's risk, and Contractor may be required to bear the costs incident thereto, including the cost of removing and replacing such Work, repairs to other affected portions of the Work, and the cost of additional time or services required of the Design Professional, Project Manager, or Inspector.

(G) ***Excessive RFIs.*** RFIs will be considered excessive or unnecessary if the City Engineer determines that the explanation or response to the RFI is clearly and unambiguously discernable in the Contract Documents. The City's costs to review and respond to excessive or unnecessary RFIs may be deducted from payments otherwise due to the Contractor.

2.6 Material Samples.

(A) ***Engineer Approval.*** Before a material is delivered or incorporated into the Work, Contractor must obtain the City Engineer's approval of the material or source for the material, by submitting a sample a representative sample of the material. Samples must be submitted in the manner specified in Section 2.5, above, or as otherwise specified in the Contract Documents. Contractor is solely responsible for the cost to remove and replace materials that were used or installed without the City Engineer's prior written approval.

(B) ***Testing.*** If Contractor is required to provide material testing, the test results must be submitted to the City Engineer within five days of the testing at no charge to the City. The testing must be performed as specified in the Contract Documents, or if not specified, in accordance with nationally recognized trade standards.

Article 3 - Contract Documents

3.1 Interpretation of Contract Documents.

(A) ***Drawings and Specifications.*** The Drawings and Specifications included in the Contract Documents are complementary. If Work is shown on one but not on the other, Contractor must perform the Work as though fully described on both, consistent with the Contract Documents and reasonably inferable from them as being necessary to produce the indicated results. The Drawings and Specifications are deemed to include and require everything necessary and reasonably incidental to completion of the Work, whether or not particularly mentioned or shown. Contractor must perform all work and services and supply all things reasonably related to and inferable from the Contract Documents. In the event of a conflict between the Drawings and Specifications, the Specifications will control.

(B) ***Duty to Notify.*** If Contractor becomes aware of any ambiguity, discrepancy, omission, or error in the Drawings or Specifications, Contractor must immediately notify the Design Professional and request clarification of such, by submitting a

written request for information (RFI) in the manner specified by City. The Design Professional's clarifications or interpretations will be final and binding.

(C) ***Figures and Dimensions.*** Figures control over scaled dimensions.

(D) ***Technical or Trade Terms.*** Any terms that have well-known technical or trade meanings will be interpreted in accordance with those meanings, unless otherwise specifically defined in the Contract Documents.

(E) ***Measurements.*** Contractor must verify all relevant measurements at the Worksite before ordering any material or performing any Work, and will be responsible for the correctness of those measurements.

3.2 Order of Precedence. Information included in one Contract Document but not in another will not be considered a conflict or inconsistency. Unless otherwise specified in the *Special Conditions*, in case of any conflict or inconsistency among the Contract Documents, the following order of precedence will apply, beginning from highest to lowest:

(A) Change Orders;
(B) Addenda;
(C) Contract;
(D) Notice to Proceed;
(E) Notice of Award;
(F) Special Conditions;
(G) General Conditions;
(H) Payment and Performance Bonds;
(I) Specifications;
(J) Drawings;
(K) Contractor's Bid Proposal and attachments;
(L) Notice Inviting Bids;
(M) Instructions for Bidders;
(N) Brentwood Standard Plans and Specifications; and
(O) Any documents prepared by and on behalf of a third party, that were not prepared specifically for this Project, e.g., Caltrans Standard Specifications or Caltrans Special Provisions.

3.3 Caltrans Standard Specifications. Any reference to or incorporation of the Standard Specifications of the State of California, Department of Transportation ("Caltrans"), including "Standard Specifications," "Caltrans Specifications," "State Specifications," or "CSS" means the most current edition of Caltrans' Standard Specifications, unless otherwise specified ("Standard Specifications"), including the most current amendments as of the date that Contractor's bid was submitted for this Project. The following provisions apply to use of or reference to the Standard Specifications:

(A) ***Limitations.*** None of the "General Provisions" of the Standard Specifications, i.e., Sections 1 through 9, applies to these Contract Documents with the exception of any specific provisions, if any, which are expressly stated to apply to these Contract Documents.

(B) ***Conflicts or Inconsistencies.*** If there is a conflict or inconsistency between any provision in the Standard Specifications and a provision of these Contract Documents, as determined by the City Engineer, the provision in the Contract Documents will govern.

(C) ***Meanings.*** Terms used in the Standard Specifications are to be interpreted as follows:

(1) Any reference to the "Engineer" is deemed to mean the City Engineer.

(2) Any reference to the "Special Provisions" is deemed to mean the *Special Conditions*.

(3) Any reference to the "State" is deemed to mean the City.

3.4 For Reference Only. Contractor is responsible for the careful review of any document, study, or report appended to the Contract Documents solely for informational purposes and identified as "For Reference Only." Nothing in any document, study, or report so appended and identified is intended to supplement, alter, or void any provision of the Contract Documents. However, Contractor is advised that City or its representatives may be guided by information or recommendations included in such reference documents, particularly when making determinations as to the acceptability of proposed materials, methods, or changes in the Work. Contractor must promptly notify the City Engineer of any perceived or actual conflict between the Contract Documents and any document provided For Reference Only.

Article 4 - Bonds, Indemnity, and Insurance

4.1 Payment and Performance Bonds. Within ten days following issuance of the notice of award, Contractor is required to provide a payment bond and a performance bond, each in the penal sum of not less than 100% of the Contract Price, using the bond forms included with the Contract Documents.

(A) ***Surety.*** Each bond must be issued by a surety admitted in California. If an issuing surety cancels the bond or becomes insolvent, within seven days following written notice from City, Contractor must substitute a surety acceptable to City. If Contractor fails to substitute an acceptable surety within the specified time, City may, at its sole discretion, withhold payment from Contractor until the surety is replaced to City's satisfaction, or terminate the Contract for default.

4.2 Indemnity and Liability.

(A) ***Contractor's Indemnity Obligation.*** To the fullest extent permitted by law, Contractor must indemnify, defend, and hold harmless City, its agents and consultants, and Design Professional (individually, an "Indemnitee," and collectively the "Indemnitees") from and against any and all liability, loss, damage, claims, expenses (including, without limitation, attorney fees, expert witness fees, paralegal fees, and fees and costs of litigation or arbitration) (collectively, "Liability") of every nature arising out of or in connection with the operations of Contractor, its employees, Subcontractors, representatives, or agents, in bidding or performing the Work or its failure to comply with any of its obligations under the

Contract, except such Liability caused by the active negligence, sole negligence, or willful misconduct of an Indemnitee. This indemnity requirement applies to any Liability arising from alleged defects in the content or manner of submission of the Contractor's bid for the Contract. Contractor's failure or refusal to timely accept a tender of defense pursuant to this provision will be deemed a material breach of this Contract.

(B) ***Third Party Claims.*** City will timely notify Contractor upon receipt of any third-party claim relating to the Contract, as required by Public Contract Code Section 9201.

(C) ***No Personal Liability.*** No member of the City Council or any individual officer, employee or authorized agent of the City will be personally liable to Contractor or to any Subcontractor for any liability arising under this Contract.

4.3 Insurance. No later than ten days following issuance of the notice of award, Contractor is required to procure and provide proof of the insurance coverage required by this section in the form of certificates and endorsements. The required insurance must cover the activities of Contractor and its Subcontractors relating to or arising from the performance of the Work, and must remain in full force and effect at all times during the period covered by the Contract until the date of recordation of the notice of completion. All required insurance must be issued by a company licensed to do business in the State of California, and each such insurer must have an A.M. Best's financial strength rating of "A" or better and a financial size rating of "VIII" or better. If Contractor fails to provide any of the required coverage in full compliance with the requirements of the Contract Documents, City may, at its sole discretion, purchase such coverage at Contractor's expense and deduct the cost from payments due to Contractor, or terminate the Contract for default.

(A) ***Policies and Limits.*** The following insurance policies and limits are required for this Contract unless otherwise specified in the *Special Conditions*:

(1) *Commercial General Liability Insurance ("CGL"):* The CGL policy must be issued on an occurrence basis, written on a comprehensive general liability form, and must include coverage for liability arising from Contractor's or its Subcontractor's operations in the performance of the Work, including contractor's protected coverage, blanket contractual, completed operations, vehicle coverage and employer's non-ownership liability coverage, with limits of at least $5,000,000.00 per occurrence, and $10,000,000.00 aggregate. The CGL policy must name City as an additional insured for all liability arising out of the operations by or on behalf of the named insured, and must protect City, its officers, employees, and agents against any and all liability for personal injury, death, or property damage or destruction arising directly or indirectly in the performance of the Contract. The additional insured endorsement must be provided using ISO form CG 20 10 11 85 alone, or both forms CG 20 10 10 01 <u>and</u> CG 20 37 10 01 or CG 20 10 04 13 <u>and</u> CG 20 37 04 13. The CGL coverage may be arranged under a single policy for the full limits required or by a combination of underlying policies with the balance provided by excess or umbrella policies, provided each such policy complies with the requirements set forth herein.

(3) *Builder's Risk Insurance:* The Builder's Risk Insurance policy must be issued on occurrence basis, for all-risk coverage on a 100% completed value basis on the insurable portion of the Project for the benefit of City.

(2) *Workers' Compensation Insurance and Employer's Liability:* The policy must comply with the requirements of the California Workers' Compensation Insurance and Safety Act, with of at least $1,000,000.00. If Contractor is self-insured, Contractor must provide its Certificate of Permission to Self-Insure, duly authorized by the Department of Industrial Relations.

(4) *Automobile Liability.* The automobile liability policy must provide coverage of at least $1,000,000 combined single-limit per accident for bodily injury, death or property damage.

(B) ***Notice.*** Each certificate of insurance must state that the coverage afforded by the policy or policies will not be reduced, cancelled or allowed to expire without at least 30 days written notice to City, unless due to non-payment of premiums, in which case ten days written notice must be made to City.

(C) ***Waiver of Subrogation.*** Each required policy must include an endorsement providing that the carrier agrees to waive any right of subrogation it may have against City.

(D) ***Required Endorsements.*** The CGL Policy and the Builder's Risk Policy must include the following specific endorsements:

(1) The inclusion of more than one insured will not operate to impair the rights of one insured against another, and the coverages afforded will apply as though separate policies have been issued to each insured.

(2) The insurance provided by Contractor is primary and no insurance or self-insurance held or owned by City, its officers, officials, employees or volunteers may be called upon to contribute to a loss. Any insurance or self-insurance held or owned by City, its officers, officials, employees and volunteers is excess to Contractor's insurance and may not be called on to cover or contribute to any loss covered by Contractor's insurance.

(3) This policy does not exclude explosion, collapse, underground excavation hazard, or removal of lateral support.

(E) ***Subcontractors.*** Contractor must ensure that each Subcontractor is required to maintain the same insurance coverage required under this Section 4.3, with respect to its performance of Work on the Project, including those requirements related to the additional insureds and waiver of subrogation. Contractor must confirm that each Subcontractor has complied with these insurance requirements before the Subcontractor is permitted to begin Work on the Project. Upon request by the City, Contractor must provide certificates and endorsements submitted by each Subcontractor to prove compliance with this requirement. The insurance requirements for Subcontractors do not replace or limit the Contractor's insurance obligations.

(F) ***Deductibles and Self-Insured Retentions.*** Any deductibles or self-insured retentions that apply to the required insurance (collectively, "deductibles") are subject to approval by City, acting in its sole discretion, and must be declared by Contractor when it submits its certificates of insurance and endorsements pursuant to this Section 4.3. If City determines that the deductibles are unacceptably high, at City's option, Contractor must either reduce or eliminate the deductibles as they apply to City and all required additional insured, as stated in subsection 4.3(A)(1), above; or must provide a financial guarantee, to City's satisfaction, guaranteeing payment of losses and related investigation, claim administration and legal expenses.

4.4 Warranty Bond. As a condition precedent to Final Completion, Contractor must submit a warranty bond, using the form provided by City, to guarantee its Work as specified in Article 11, Completion and Warranty Procedures. The warranty bond must be issued by a surety admitted in California for 15% of the final Contract Price or as otherwise specified in the Contract Documents. If an issuing surety cancels the bond or becomes insolvent, within seven days following written notice from City, Contractor must substitute a surety acceptable to City.

Article 5 - Contract Time

5.1 Time is of the Essence. Time is of the essence in Contractor's performance and completion of the Work, and Contractor must diligently prosecute the Work and complete it within the Contract Time.

(A) ***General.*** Contractor must commence the Work on the date indicated in the notice to proceed, and must fully complete the Work, in strict compliance with all requirements of the Contract Documents, and within the Contract Time.

(B) ***Rate of Progress.*** Contractor and its Subcontractors must, at all times, provide workers, materials, and equipment sufficient to maintain the rate of progress necessary to ensure full completion of the Work within the Contract Time. If City determines that Contractor is failing to prosecute the Work at a sufficient rate of progress, City may, in its sole discretion, direct Contractor to provide additional workers, materials, or equipment, or to work additional hours or days without additional cost to City, in order to achieve a rate of progress satisfactory to City. If Contractor fails to comply with City's directive in this regard, City may, at Contractor's expense, separately contract for additional workers, materials, or equipment or use City's own forces to achieve the necessary rate of progress. Alternatively, City may terminate the Contract based on Contractor's default.

5.2 Schedule Requirements. All schedules must be prepared using standard scheduling software acceptable to Design Professional, and must provide schedules in electronic and paper form as requested.

(A) ***As-Planned (Baseline) Schedule.*** Within 15 calendar days following issuance of the notice of award (or as otherwise specified in the *Special Conditions*), Contractor must submit to City for review and approval an as-planned (baseline) schedule showing in detail how Contractor plans to perform and fully complete the Work within the Contract Time using critical path methodology. The as-planned schedule must include the work of all trades required for the Work, and must be

sufficiently comprehensive and detailed to enable progress to be monitored on a day-by-day basis. For each activity, the as-planned schedule must be dated, provided in the format specified in the Contract Documents or as required by the City Engineer, and must include, at a minimum, a description of the activity, the start and completion dates, and the duration.

(B) ***Progress Schedules.*** Contractor must submit an updated progress schedule and three-week look-ahead schedule, in the format specified by the City Engineer, for review and approval with each application for a progress payment. The progress schedule must show how the actual progress of the Work to date compared to the as-planned schedule, and must identify any actual or potential impacts to the critical path.

(C) ***Recovery Schedule.*** If City determines that the Work is more than one week behind schedule, within seven days following written notice of such determination, Contractor must submit a recovery schedule, showing how the Contractor intends to perform and complete the Work within the Contract Time, based on actual progress to date.

(D) ***Effect of Approval.*** Contractor and its Subcontractors must perform the Work in accordance with the most current approved schedule unless otherwise directed by City. City's approval of a schedule does not operate to extend the time for completion of the Work or any component of the Work, and will not affect City's right to assess liquidated damages for Contractor's unexcused delay in completing the Work within the Contract Time.

(E) ***Posting.*** Contractor must at all times maintain a copy of the most current approved progress or recovery schedule posted prominently in its on-site office.

(F) ***Reservation of Rights.*** City reserves the right to direct the sequence in which the Work must be performed or to make changes in the sequence of the Work in order to facilitate the performance of work by City or others, or to facilitate City's use of its property. The Contract Time or Contract Price may be adjusted to the extent such changes in sequence actually increase or decrease Contractor's time or cost to perform the Work.

(G) ***Authorized Working Days and Times.*** Contractor is limited to working Monday through Friday, excluding holidays observed by the City, starting no earlier than 7:00 a.m., and ending no later than 3:30 p.m., except as expressly provided in the *Special Conditions*, or as authorized in writing by City. City reserves the right to charge Contractor for additional costs incurred by City due to Work performed on days or during hours not expressly authorized in these Contract Documents, including reimbursement of costs incurred for inspection, testing, and construction management services. Contractor may not perform Work outside of the authorized Working Days and times without the prior written consent of the City Engineer. A request to perform Work outside of the authorized Working Days and times must be submitted in writing to the City Engineer at least two Working Days in advance. Contractor will be solely responsible for any resulting costs, including overtime inspection, testing or staking.

5.3 Delay and Extensions of Contract Time.

(A) ***Excusable Delay.*** The Contract Time may be extended if Contractor encounters an unavoidable delay in completing the Work within the Contract Time due to causes completely beyond Contractor's control, and which Contractor could not have avoided or mitigated through planning, foresight, and diligence ("Excusable Delay"). Grounds for Excusable Delay may include fire, earthquake, acts of terror or vandalism, epidemic, unforeseeable adverse government actions, unforeseeable actions of third parties, encountering unforeseeable hazardous materials, unforeseeable site conditions, suspension for convenience under Article 13, or unusually severe weather.

(B) ***Non-Excusable Delay****.* Excusable Delay does not include delay that is concurrent with non-Excusable Delay, and does not include delay caused by:

(1) Weather conditions which are normal for the location of the Project, as determined by reliable records, including monthly rainfall averages, for the preceding ten years;

(2) Contractor's failure to order equipment and materials sufficiently in advance of the time needed for timely completion of the Work;

(3) Contractor's failure to provide adequate notification to utility companies for connections or services necessary for the timely performance and completion of the Work;

(4) Foreseeable conditions Contractor could have ascertained from reasonably diligent inspection of the Worksite or review of the Contract Documents; or

(5) Contractor's financial inability to perform the Work, including insufficient funds to pay its Subcontractors or suppliers.

(C) ***Request for Extension of Contract Time.*** A request for an extension of time and associated delay costs must be submitted in writing to the Project Manager within ten calendar days of the date the delay is first encountered, even if the duration of the delay is not yet known at that time, or will be deemed waived. In addition to complying with the requirements of this Article 5, the request must be submitted in compliance with the Change Order request procedures in Article 6, below. Strict compliance with these requirements is necessary to ensure that any delay or delay costs may be mitigated as soon as possible, and to facilitate cost-efficient administration of the Project and timely performance of the Work. Any request for an extension of time or delay costs that does not strictly comply with the requirements of Article 5 and Article 6 will be deemed waived.

(1) *Required Contents.* The request must include a detailed description of the cause(s) of the delay, and must also describe the measures that Contractor has taken to mitigate the delay and/or its effects, including efforts to mitigate the cost impact of the delay, e.g., by workforce management, change in sequencing, etc. If the delay is still ongoing at the time the request is

submitted, the request should also include Contractor's plan for continued mitigation of the delay or its effects.

(2) *Delay Days and Costs.* The request must specify the number of days of Excusable Delay claimed, or provide a realistic estimate if the duration of the delay is not yet known. The request must specify the amount of any delay-related costs that are claimed, or provide a realistic estimate if the amount is not yet known. Any estimate of delay duration or cost must be updated in writing and submitted with all required supporting documentation as soon as the actual time and cost is known.

(3) *Supporting Documentation.* The request must also include any and all supporting documentation necessary to evidence the delay and its actual impacts, including schedule and cost impacts, including a time impact analysis using critical path methodology, and demonstrating unavoidable delay to Final Completion. The time impact analysis must be submitted in a form or format acceptable to City.

(4) *Burden of Proof.* Contractor has the burden of proving 1) that the delay was an Excusable Delay, as defined above, 2) that Contractor has made reasonable efforts to mitigate the delay and its schedule and cost impacts, 3) that the delay will unavoidably result in delaying Final Completion, and 4) that any delay costs claimed by Contractor were actually incurred and were reasonable under the circumstances.

(5) *Recoverable Costs.* If Contractor is granted an extension of time for Excusable Delay, recompense for delay costs shall be limited to actual, direct, reasonable, and substantiated costs, and will not include home office overhead, or markup for overhead and profit.

(6) *Legal Compliance.* Nothing in this provision is intended to require the waiver, alteration, or limitation of the applicability of Public Contract Code Section 7102.

(7) *No Waiver.* Any grant of an extension of time or delay costs due to an Excusable Delay will not operate as a waiver of City's right to assess liquidated damages for unexcused delay.

(8) *Dispute Resolution.* In the event of a dispute over entitlement to an extension of time or delay costs, Contractor may not stop working pending resolution of the dispute, but must continue to comply with its duty to diligently prosecute the performance and timely completion of the Work. Contractor's sole recourse for an unresolved dispute based on City's rejection of a Change Order request for an extension of time or delay costs is to comply with the Dispute Resolution provisions set forth in Article 12, below.

5.4 Liquidated Damages. It is expressly understood that if Final Completion is not achieved within the Contract Time, City will suffer damages which are difficult to determine and accurately specify. Pursuant to Public Contract Code section 7203, if Contractor fails to achieve Final Completion within the Contract Time, City will charge

Contractor in the amount specified in the Contract for each day that Final Completion is delayed beyond the Contract Time, as liquidated damages and not as a penalty.

(A) ***Liquidated Damages.*** Liquidated damages will not be assessed for any Excusable Delay, as set forth above.

(B) ***Milestones.*** Liquidated damages will also be separately assessed for failure to meet milestones specified elsewhere in the Contract Documents.

(C) ***Setoff.*** City is entitled to set off the amount of liquidated damages assessed against any payments otherwise due to Contractor, including setoff against release of retention. If there are insufficient Contract funds remaining to cover the full amount of liquidated damages assessed, City is entitled to recover the balance from Contractor or its Performance Bond surety.

(D) ***Occupancy or Use.*** Occupancy or use of the Project in whole or in part prior to Final Completion does not constitute City's acceptance of the Project and will not operate as a waiver of City's right to assess liquidated damages for Contractor's unexcused delay in achieving Final Completion.

Article 6 - Contract Modification

6.1 Changes in Work. City reserves the right to make changes in the Work without invalidating the Contract. City may direct or Contractor may request changes in the Work, and any such changes will be formalized in a Change Order, which may include commensurate changes in the Contract Price or Contract Time as applicable. Contractor must promptly comply with City-directed changes in the Work in accordance with the intent of the original Contract Documents, even if Contractor and City have not yet reached agreement as to adjustments to the Contract Price or Contract Time.

(A) ***City-Directed Change.*** In the event of a dispute over entitlement to or the amount of a change in Contract Time or a change in Contract Price related to an City-directed change, Contractor must perform the Work as directed and may not delay its work or cease work pending resolution of the dispute, but must continue to comply with its duty to diligently prosecute the performance and timely completion of the Work, including the Work in dispute.

(B) ***Contractor's Obligations.*** In the event that City and Contractor dispute whether a portion or portions of the Work are already required by the Contract Documents as opposed to changed or extra Work, Contractor must perform the Work as directed and may not delay its Work or cease Work pending resolution of the dispute, but must continue to comply with its duty to diligently prosecute the performance and timely completion of the Work, including the Work in dispute.

(C) ***Remedy for Non-Compliance.*** Contractor's failure to promptly comply with a City-directed change is deemed a material breach of the Contract, and in addition to all other remedies available to it, City may, at its sole discretion, hire another contractor or use its own forces to complete the disputed Work at Contractor's sole expense, and may deduct the cost from the Contract Price.

(D) ***Dispute Resolution.*** Contractor's sole recourse for an unresolved dispute related to changes in the Work is to comply with the dispute resolution provisions set forth in Article 12, below.

6.2 Contractor Change Order Requests. Contractor must submit a request or proposal for a change in the Work or a change in the Contract Price or Contract Time as a written Change Order request or proposal.

(A) ***Time for Submission.*** Any request for a change in the Contract Price must be submitted in writing to the Project Manager within ten calendar days of the date that Contractor first encounters the circumstances, information or conditions giving rise to the Change Order request, even if the total amount of the requested change in the Contract Price or impact on the Contract Time is not yet known at that time.

(B) ***Required Contents.*** Any Change Order request or proposal submitted by Contractor must include a complete breakdown of actual or estimated costs and credits, and must itemize labor, materials, equipment, taxes, insurance, and subcontract amounts. Any estimated cost must be updated in writing as soon as the actual amount is known.

(C) ***Required Documentation.*** All claimed costs must be fully documented, and any related request for an extension of time or delay-related costs must be included at that time and in compliance with the requirements of Article 5 of the *General Conditions*.

(D) ***Required Form.*** Contractor must use City's form(s) for submitting all Change Order requests or proposals, unless otherwise specified by City.

(E) ***Certification.*** All Change Order requests must be signed by Contractor and must include the following certification:

> "The undersigned Contractor certifies under penalty of perjury that its statements and representations in this Change Order request are true and correct. Contractor warrants that this Change Order request is comprehensive and complete, and agrees that any costs, expenses, or time extension request not included herein will be deemed waived. Contractor understands that submission of claims which have no basis in fact or which Contractor knows to be false may violate the False Claims Act, as set forth in Government Code Sections 12650 et seq."

(F) ***Effective.*** A Change Order is not effective until it is approved by the City Council or the City Council's authorized delegee.

6.3 Adjustments to Contract Price. The amount of any increase or decrease to the Contract Price will be determined based on one of the following methods in the order provided:

(A) ***Unit Pricing.*** Amounts previously provided by Contractor in the form of unit prices, either in a bid schedule or schedule of values, will apply first if unit pricing has previously been provided in Contractor's accepted bid schedule or schedule of values for the affected Work.

(B) ***Lump Sum.*** A mutually agreed upon lump sum.

(C) ***Time and Materials.*** On a time and materials basis, which may include a not-to-exceed limit, calculated as the total of the following sums:

(1) All direct labor costs plus 15% for overhead and profit;

(2) All direct material costs, including sales tax, plus 15% for overhead and profit;

(3) All direct plant and equipment rental costs, plus 15% for overhead and profit;

(4) All direct subcontract costs plus 10% for overhead and profit; and

(5) Increased bond or insurance premium costs computed at 1.5% of total of the previous four sums.

6.4 Unilateral Change Order. If City disagrees with the amount of compensation or extension of time that Contractor has requested, City may elect to issue a unilateral Change Order, directing performance of the Work, and authorizing a change in the Contract Price or Contract Time in the amount City believes is merited. Contractor's sole recourse to dispute the terms of a unilateral Change Order is to submit a timely Claim pursuant to Article 12, below.

6.5 Non-Compliance Deemed Waiver. Contractor waives its entitlement to any increase in the Contract Price or Contract Time if Contractor fails to full comply with the provisions of this Article. Contractor will not be paid for unauthorized extra work.

Article 7 - General Construction Provisions

7.1 Permits and Taxes.

(A) ***General.*** Contractor must obtain and pay for any and all permits, fees, or licenses required to perform the Work, unless otherwise indicated in the Contract Documents. Contractor must cooperate with and provide notifications to government agencies with jurisdiction over the Project, as may be required. Contractor must provide City with copies of all notices, permits, licenses, and renewals required for the Work.

(B) ***Federal Excise Tax.*** Contractor must pay for all taxes on labor, material and equipment, except Federal Excise Tax to the extent that City is exempt from Federal Excise Tax.

7.2 Temporary Facilities. Contractor must provide, at Contractor's sole expense, any and all temporary facilities, including onsite office, sanitary facilities, storage, scaffolds, barricades, walkways, and any other temporary structure required to safely perform the Work along with any utility services incidental thereto.

(A) ***Standards.*** Such structures must be safe and adequate for the intended use, and installed and maintained in accordance with all applicable federal, state, and local laws, codes, and regulations.

(B) ***Removal and Repair.*** Contractor must promptly remove all such temporary facilities when they are no longer needed or upon completion of the Work, whichever comes first. Contractor must promptly repair any damage to City's property caused by the installation, use, or removal of the temporary facilities, and must promptly restore the property to its original or intended condition.

(C) ***Additional Requirements.*** Additional provisions pertaining to temporary facilities may be included in the Specifications or *Special Conditions*.

7.3 Signs. Contractor must furnish and install all signs required by the Contract Documents or required by the City Engineer at Contractor's sole expense. No signs may be displayed on or about City's property, except signage which is required by law, by the City Engineer or by the Contract Documents, without City's prior written approval as to content, size, design, and location.

7.4 Protection of Work and Property.

(A) ***General.*** Contractor is responsible at all times for protecting the Work and materials and equipment to be incorporated into the Work from damage until the Notice of Completion has been recorded. Except as specifically authorized by City, Contractor must confine its operations to the area of the Project site indicated in the Drawings. Contractor is liable for any damage caused to City's real or personal property, the real or personal property of adjacent property owners, or the work or personal property of other contractors working for City.

(B) ***Unforeseen Conditions.*** If Contractor encounters facilities, utilities, or other unknown conditions not shown on or reasonably inferable from the Drawings or apparent from inspection of the Project site, Contractor must promptly notify the Project Manager, and must avoid taking any action which could cause damage to the facilities or utilities pending further direction from the Project Manager. If the Project Manager's subsequent direction to Contractor affects Contractor's cost or time to perform the Work, Contractor may submit a Change Order request as set forth in Article 6, above.

(C) ***Support; Adjacent Properties.*** Contractor must provide, install, and maintain all shoring, bracing, underpinning, etc., necessary to provide support to City's property and adjacent properties and improvements thereon. Contractor must provide notifications to adjacent property owners as may be required by law.

7.5 Noninterference. Contractor must take reasonable measures to avoid interfering with City's use of its property at or adjacent to the Project site, including use of roadways, entrances, parking areas, walkways, and structures. Contractor must provide written notification to the City Engineer and to the City's Fire and Police Departments at least two Working Days before closing any lane or otherwise obstructing access by emergency vehicles to any area.

7.6 Materials and Equipment.

(A) ***General.*** Unless otherwise specified, all materials and equipment required for the Work must be new and of the best grade for the intended purpose, and furnished in

sufficient quantities to ensure the proper and expeditious performance of the Work. Unless otherwise specified, all materials and equipment required for the Work are deemed to include all components required for complete installation and intended operation, and must be installed in accordance with the manufacturer's recommendation. Contractor is responsible for all shipping, handling, and storage costs associated with the materials and equipment required for the Work, and is responsible for protecting the Work and all of the required materials, supplies, tools and equipment at Contractor's sole cost until City accepts the Project.

(B) ***City-Provided.*** If the Work includes installation of materials or equipment to be provided by City, Contractor is solely responsible for the proper examination, handling, storage, and installation of such items in accordance with the Contract Documents. Contractor must promptly notify City of any defects discovered in City-provided materials or equipment. Contractor is solely responsible for any loss of or damage to such items which occurs while the items are in Contractor's custody and control, the cost of which may be offset from the Contract Price and deducted from any payment(s) due to Contractor.

(C) ***Intellectual Property Rights.*** Contractor must, at its sole expense, obtain any authorization required for use of patented or copyright protected materials, equipment, devices or processes that are incorporated into the Work. Contractor's indemnity obligation in Article 4, applies to any claimed violation of intellectual property rights in violation of this provision.

7.7 Substitutions.

(A) ***"Or Equal."*** Any specification designating a material, product, thing, or service by specific brand or trade name, followed by the words "or equal," is intended only to indicate quality and type of item desired, and Contractor may request use of any equal material, product, thing, or service.

(B) ***Request for Substitution.*** A request for substitution must be submitted to the Project Manager for approval within the applicable time period provided in the Contract Documents. If no time period is specified, the substitution request may be submitted any time within 35 days after the date of award of the Contract, or sufficiently in advance of the time needed to avoid delay of the Work, whichever is earlier.

(C) ***Substantiation.*** All data substantiating the proposed substitute as an "equal" item must be submitted with the written request for substitution. Contractor's failure to timely provide necessary substantiation is ground for rejection of the proposed substitution, without further review.

(D) ***Burden of Proving Equality.*** Contractor has the burden of proving the equality of the proposed substitution. The City Engineer has sole discretion to determine whether a proposed substitution is "equal," and the City Engineer's determination is final.

(E) ***Approval or Rejection.*** If the proposed substitution is approved, Contractor is solely responsible for any additional costs associated with the substituted item(s).

If the proposed substitution is rejected, Contractor must, without delay, install the item specified.

(F) ***Contractor's Obligations.*** The City Engineer's review of a proposed substitution will not relieve Contractor from any of its obligations under the Contract Documents. In the event Contractor makes an unauthorized substitution, Contractor will be solely responsible for all resulting cost impacts, including the cost of removal and replacement and the impact to other design elements.

7.8 Testing and Inspection.

(A) ***General.*** All materials, equipment, and workmanship used in the Work are subject to inspection by Inspector at all times and locations during construction and/or fabrication. All manufacturers' application or installation instructions must be provided to the Inspector at least ten days prior to the first such application or installation. Contractor must, at all times, make the Work available for inspection.

(B) ***Scheduling and Notification.*** Contractor must schedule all tests required by the Contract Documents in time to avoid any delay to the progress of the Work. Contractor must provide timely notice to all necessary parties as specified in the Contract Documents.

(C) ***Responsibility for Costs.*** City will bear the initial cost of testing to be performed by independent testing consultants retained by City, subject to the following exceptions:

(1) Contractor will be responsible for the costs of any subsequent tests which are required to substantiate compliance with the Contract Documents, and any associated remediation costs.

(2) Contractor will be responsible for inspection costs, at City's established rates, for inspection time lost because the Work is not ready or Contractor fails to appear for a scheduled inspection.

(3) In addition, if any portion of the Work which is subject to testing is covered or concealed by Contractor prior to testing, Contractor will bear the cost of making that portion of the Work available for the testing required by the Contract Documents, and any associated repair or remediation costs.

(D) ***Contractor's Obligations.*** Any Work that fails to comply with the requirements of the Contract Documents must be promptly repaired, replaced, or corrected by Contractor, at Contractor's sole expense, even if that Work was previously inspected or included in a progress payment. Contractor is solely responsible for any delay occasioned by remediation of noncompliant Work. Inspection of the Work does not in any way relieve Contractor of its obligations to perform the Work as specified.

(E) ***Distant Locations.*** If required off-site testing or inspection must be conducted at a location more than 100 miles from the Project site, Contractor is solely responsible for the additional travel costs required for testing and/or inspection at such locations.

(F) ***Final Inspection.*** The provisions of this Section 7.8 apply to final inspection under Article 11, Completion and Warranty Provisions.

7.9 Clean up. Contractor must regularly remove debris and waste materials and maintain the Worksite in clean and neat condition.

(A) ***General.*** Prior to discontinuing work in an area, Contractor must clean the area and remove all rubbish along with its construction equipment, tools, machinery, waste and surplus materials. Contractor must, at all times, minimize and confine dust and debris resulting from construction activities.

(B) ***Completion.*** At the completion of the Work, Contractor must remove from the Worksite all of its equipment, tools, surplus materials, waste materials and debris. Before demobilizing from the Worksite, Contractor must ensure that all surfaces are cleaned, sealed, waxed, or finished as applicable, and that all marks, stains, paint splatters, and the like have been properly removed from the completed Work and the surrounding areas.

(C) ***Non-Compliance.*** If Contractor fails to commence compliance with its cleanup obligations within two business days following written notification from City or its representative, City may undertake appropriate cleanup measures without further notice and the cost will be deducted from any amounts due or to become due the Contractor.

7.10 Instructions and Manuals. Contractor must provide three copies each of all instructions and manuals required by the Contract Documents, unless otherwise specified. These must be complete as to drawings, details, parts lists, performance data, and other information that may be required for City to easily maintain and service the materials and equipment installed for this Project.

(A) ***Submittal Requirements.*** All manufacturers' application or installation instructions must be provided to the Inspector at least ten days prior to the first such application. The instructions and manuals, along with any required guarantees, must be delivered to the Design Professional for review.

(B) ***Instruction of Personnel.*** Contractor or its Subcontractors must instruct City's personnel in the operation and maintenance of any complex equipment as a condition precedent to Final Completion, if required in the Contract Documents.

7.11 As-built Drawings. Contractor and its Subcontractors must maintain on the Worksite a separate complete set of the Drawings which will be used solely for the purpose of recording changes made in any portion of the Work in order to create accurate record drawings at the end of the Project.

(A) ***Duty to Update.*** The as-built drawings must be updated as changes occur, on a daily basis if necessary. Progress payments may be delayed, in whole or in part, until the as-built drawings are brought up to date to the satisfaction of the City Engineer. Actual locations to scale must be identified on the as-built drawings for all runs of mechanical and electrical work, including all site utilities, etc., installed underground, in walls, floors, or otherwise concealed. Deviations from the original

Drawings must be shown in detail. The location of all main runs, whether piping, conduit, ductwork, drain lines, etc., must be shown by dimension and elevation.

(B) ***Final Completion.*** Contractor must verify that all changes in the Work are depicted in the as-built drawings and must deliver the complete set of as-built drawings to the City Engineer and Design Professional for review and approval as a condition precedent to Final Completion.

7.12 Existing Utilities. As required by Government Code Section 4215, if, during the performance of the Work, Contractor discovers utility facilities not identified by City in the Contract Documents, Contractor must immediately provide written notice to City and the utility. City assumes responsibility for the timely removal, relocation, or protection of existing main or trunkline utility facilities located on the Project site, if those utilities are not identified in the Contract Documents. Contractor will be compensated in accordance with the provisions of the Contract Documents for the costs of locating, repairing damage not due to Contractor's failure to exercise reasonable care, and removing or relocating such utility facilities not indicated in the Drawings or Specifications with reasonable accuracy, and for equipment on the Project necessarily idled during such work. Contractor will not be assessed liquidated damages for delay in completion of the Work, to the extent such delay was caused by City's failure to provide for removal or relocation of the utility facilities.

7.13 Notice of Excavation. Government Code Section 4216.2, requires that except in an emergency, Contractor must contact the appropriate regional notification center, or Underground Services Alert at 800-642-2444 (for Northern California), at least two Working Days, but not more than 14 calendar days before starting any excavation if the excavation will be conducted in an area that is known, or reasonably should be known, to contain subsurface installations, and if practical, Contractor must delineate with white paint or other suitable markings the area to be excavated.

7.14 Trenching and Excavations.

(A) ***Duty to Notify.*** Contractor must promptly, and before the following conditions are disturbed, provide written notice to City if the Contractor finds any of the following conditions:

(1) Material that Contractor believes may be a hazardous waste, as defined in Section 25117 of the Health and Safety Code, that is required to be removed to a Class I, Class II, or Class III disposal site in accordance with the provisions of existing law;

(2) Subsurface or latent physical conditions at the Worksite differing from those indicated by information about the Worksite made available to bidders prior to the deadline for submitting bids; or

(3) Unknown physical conditions at the Worksite of any unusual nature, materially different from those ordinarily encountered and generally recognized as inherent in work of the character required by the Contract Documents.

(B) ***City Investigation.*** City will promptly investigate the conditions and if City finds that the conditions do materially differ or do involve hazardous waste, and cause a decrease or increase in Contractor's cost of, or the time required for, performance of any part of the Work, City will issue a Change Order.

(C) ***Disputes.*** In the event that a dispute arises between the City and the Contractor regarding any of the conditions specified in subsection (A) above, Contractor will not be excused from any scheduled completion date provided for in the Contract Documents, but must proceed with all Work to be performed under the Contract. Contractor will retain any and all rights provided either by the Contract or by law which pertain to the resolution of disputes between Contractor and City.

7.15 Trenching of Five Feet or More. As required by Labor Code Section 6705, if the Contract Price exceeds $25,000 and the Work includes the excavation of any trench or trenches of five feet or more in depth, a detailed plan must be submitted to City or its civil or structural engineer, for acceptance in advance of the excavation. The detailed plan must show the design of shoring, bracing, sloping, or other provisions to be made for worker protection from the hazard of caving ground during the excavation. If the plan varies from the shoring system standards, it must be prepared by a registered civil or structural engineer. Use of a shoring, sloping, or protective system less effective than that required by the Construction Safety Orders is prohibited.

7.16 New Utility Connections. City will pay connection charges and meter costs for new permanent utilities required by the Contract Documents, if any. Contractor must notify City sufficiently in advance of the time needed to request service from each utility provider so that connections and services are initiated in accordance with the Project schedule.

7.17 Lines and Grades. Contractor is required to use any benchmark provided by City Engineer. Unless otherwise specified in the Contract Documents, Contractor must provide all lines and grades required to execute the Work based on the benchmark(s) provided by the City Engineer.

(A) ***Benchmarks.*** If Contractor needs to have a benchmark staked or marked, it must submit written request to the City Engineer at least three Working Days in advance or sooner if necessary to avoid delay in performing the Work. In order to avoid inefficiencies created by requesting multiple Site visits by the City Engineer for this purpose, the request must be based upon a minimum of four hours of time for the City Engineer to provide the requested staking and marking. If Contractor submits a request for less than the minimum four hours, based on inefficient planning, Contractor will be billed the difference in cost between the four hour minimum and the City Engineer's actual time to stake or mark.

(B) ***Clear Area.*** Contractor is responsible for having the area(s) to be staked or marked by the City Engineer cleared in advance of any obstructions. If an area to be staked or marked is not adequately cleared by the time the City Engineer arrives, Contractor will be responsible for City Engineer's standby time, or for any ensuing delay if the City Engineer needs to reschedule the staking or marking to allow Contractor time to clear remaining obstructions.

(C) ***Duty to Protect.*** Contractor is responsible for protecting stakes and marks set by the City Engineer against damage or displacement. If the stakes or marks are damaged or displaced, Contractor must request that the City Engineer reset the stakes or marks, providing at least three Working Days' notice. Contractor may be backcharged for the City's cost to reset the stakes or marks if the resetting is required because of Contractor's failure to take appropriate measures to protect the stakes or marks.

7.18 Historic or Archeological Items.

(A) ***Contractor's Obligations.*** Contractor must ensure that all persons performing Work at the Project site are required to immediately notify the Inspector or Project Manager, upon discovery of any potential historic or archeological items, including historic or prehistoric ruins, burial grounds, archaeological or vertebrate paleontological site, including fossilized footprints or other archeological, paleontological or historical feature on the Project site (collectively, "Historic or Archeological Items").

(B) ***Discovery; Cessation of Work.*** Upon discovery of any potential Historic or Archeological Items, Work must be stopped within an 85-foot radius of the find and may not resume until authorized in writing by the City Engineer. If required by City, Contractor must assist in protecting or recovering the Historic or Archeological Items, any such assistance to be compensated as extra work on a time and materials basis under Article 6, Contract Modification. Any suspension of Work required due to discovery of Historic or Archeological Items will be treated as a suspension for convenience under Article 13.

7.19 Environmental Control. Contractor must not pollute any drainage course or its tributary inlets with fuels, oils, bitumens, acids, insecticides, herbicides or other harmful materials. Contractor and its Subcontractors shall at all times in the performance of the Work comply with all applicable federal, state, and local laws and regulations concerning pollution of waterways.

(A) ***Stormwater Permit.*** Contractor must comply with all applicable conditions of the State Water Resources Control Board national Pollutant Discharge Elimination System General Permit for Waste Discharge Requirements for Discharges of Stormwater Runoff Associated with Construction Activity ("Stormwater Permit").

(B) ***Contractor's Obligations.*** If required for the Work, a copy of the Stormwater Permit is on file in City's principal administrative offices, and the Contractor must comply with the same without adjustment of the Contract Price or the Contract Time. The Contractor must timely and completely submit required reports and monitoring information required by the conditions of the Stormwater Permit, the Contractor must comply with all other applicable state, municipal or regional laws, ordinances, rules or regulations governing discharge of stormwater, including applicable municipal stormwater management programs.

7.20 Photographic Documentation. Contractor is responsible for digital photographic and video documentation of the Project, beginning with photographs of the entire Worksite in its pre-construction condition before starting Work on the Project, and continuing to

document the progress of the Work on a daily basis, or as otherwise directed by the City Engineer. Contractor must provide photographic and video documentation to the City on disc(s) with its payment requests, showing Work performed during the period covered by the payment request, or upon request by the City Engineer.

Article 8 - Payment

8.1 Schedule of Values. Prior to submitting its first application for payment, Contractor must prepare and submit to the Project Manager a schedule of values apportioned to the various divisions and phases of the Work. Each line item contained in the schedule of values must be assigned a value such that the total of all items equals the Contract Price. The items must be sufficiently detailed to enable accurate evaluation of the percentage of completion claimed in each application for payment, and the assigned value consistent with any itemized or unit pricing submitted with Contractor's bid.

8.2 Progress Payments. Following the last day of each month, or as otherwise required by the *Special Conditions* or *Specifications*, Contractor will submit to the Project Manager for approval, a monthly application for payment for Work performed during the preceding month based on the estimated value of the Work performed during that preceding month.

(A) ***Application for Payment.***

(1) Each application for payment must be itemized to include labor, materials, and equipment incorporated into the Work, and materials and equipment delivered to the Worksite, as well as authorized and approved Change Orders. Each pay application must be supported by the Contractor's schedule of values and any other substantiating data required by the Contract Documents.

(2) Each application for payment must be accompanied by an executed Conditional Waiver And Release Upon Progress Payment, using the form specified in Civil Code Section 8132 for each Subcontractor that performed Work during the period covered by that application.

(B) ***Payment of Undisputed Amounts.***

(1) City will pay the undisputed amount due, as certified by the Design Professional, within thirty (30) days after Contractor has submitted a complete and accurate payment application, subject to Public Contract Code Section 20104.50. City will deduct a percentage from each progress payment as retention, as set forth in Section 8.5, below, and may deduct additional amounts as set forth in Section 8.3, below.

(2) Within 45 days after receipt of each payment from the City, Contractor must submit an executed Unconditional Waiver And Release Upon Progress Payment, using the form specified in Civil Code Section 8134, from each Subcontractor that has received a progress payment from Contractor following Contractor's receipt of payment from the City.

8.3 Adjustment of Payment Application. City may adjust or reject a payment application, including application for Final Payment, in whole or in part, based upon any of the circumstances listed below. Contractor will be notified in writing of the basis for the adjustment, and will be promptly paid once the basis for that adjustment has been remedied and no longer exists.

(A) Contractor's unexcused failure to perform the Work as required by the Contract Documents, including correction or completion of punch list items;

(B) Loss or damage caused by Contractor or its Subcontractor(s) arising out of or relating to performance of the Work;

(C) Contractor's failure to pay its Subcontractors and suppliers when payment is due;

(D) Failure to timely correct rejected, nonconforming, or defective Work;

(E) Unexcused delay in performance of the Work;

(F) Any unreleased stop notice, retained as 125% of the amount claimed;

(G) Failure to submit any required schedule or schedule update in the manner and within the time specified in the Contract Documents:

(H) Failure to maintain or submit as-built documents in the manner and within the time specified in the Contract Documents;

(I) Work performed without approved Shop Drawings, when approved Shop Drawings are required before proceeding with the Work;

(J) Contractor's payroll records are delinquent or inadequate; and

(K) Any other costs or charges that may be offset against payments due, as provided in the Contract Documents, including liquidated damages.

8.4 Acceptance of Work. Neither City's payment of progress payments nor its partial or full use or occupancy of the Project constitutes acceptance of any part of the Work.

8.5 Retention. City will retain five percent of the amount due on each progress payment, or the percentage stated in the *Notice Inviting Bids*, whichever is greater, as retention to ensure full and satisfactory performance of the Work.

(A) ***Substitution of Securities.*** As provided by Public Contract Code Section 22300, Contractor may request in writing that it be allowed, at its sole expense, to substitute securities for the retention withheld by City. Any escrow agreement entered into pursuant to this provision will fully comply with Public Contract Code Section 22300, and will be subject to approval as to form by City's legal counsel.

(B) ***Release of Undisputed Retention.*** All undisputed retention, less any amounts that may be assessed as liquidated damages, retained for stop notices, or otherwise withheld under Section 8.3 or 8.6 will be released as Final Payment to Contractor no sooner than 35 days following recordation of the notice of

completion, and no later than 60 days following acceptance of the Project by the City Council or authorized designee, or, if the Project has not been accepted, no later than 60 days after the Project is otherwise considered complete under Public Contract Code Section 7107(c).

8.6 Setoff. City is entitled to set off any amounts due from Contractor against any payments due to Contractor. City's entitlement to setoff includes progress payments as well as Final Payment and release of retention.

8.7 Payment to Subcontractors and Suppliers. Each month, Contractor must promptly pay each Subcontractor and supplier the value of the portion of labor, materials, and equipment incorporated into the Work or delivered to the Worksite by the Subcontractor or supplier during the preceding month. Such payments must be made in accordance with the requirements of the law, and those of the Contract Documents and applicable subcontract or supplier contract.

(A) ***Withholding for Stop Notice.*** City will withhold 125% of the amount claimed by an unreleased stop notice, a portion of which may be retained by City for the costs incurred in handling the stop notice claim, including attorneys' fees and costs, as authorized by law.

(B) ***Joint Checks.*** City reserves the right to issue joint checks made payable to the Contractor and its Subcontractors or suppliers. As a condition to release of payment by a joint check, the joint check payees may be required to execute a joint check agreement in a form provided or approved by City. The joint check payees will be jointly and severally responsible for the allocation and disbursement of funds paid by joint check. Payment by joint check will not be construed to create a contractual relationship between City and a Subcontractor or supplier of any tier beyond the scope of the joint check agreement.

8.8 Final Payment. Contractor's application for Final Payment must comply with the requirements for submitting an application for a progress payment as stated in Section 8.2, above. Corrections to previous progress payments, including adjustments to estimated quantities for unit priced items, may be included in the Final Payment. The date of Final Payment is deemed to be effective on the date that City acts to release retention as final payment to Contractor, or otherwise provides written notice to Contractor of Final Payment. If the amount due from Contractor to City exceeds the amount of Final Payment, City retains the right to recover the balance from Contractor or its sureties.

8.9 Release of Claims. City may, at any time, require that payment of the undisputed portion of any progress payment or Final Payment be contingent upon Contractor furnishing City with a written release of all claims against City arising from or related to the portion of Work covered by those undisputed amounts. Any disputed amounts may be specifically excluded from the release.

8.10 Warranty of Title. Contractor warrants that title to all work, materials, or equipment incorporated into the Work and included in a request for payment will pass over to City free of any claims, liens, or encumbrances upon payment to Contractor.

Article 9 - Labor Provisions

9.1 Discrimination Prohibited. Discrimination against any prospective or present employee engaged in the Work on grounds of race, color, ancestry, national origin, ethnicity, religion, sex, sexual orientation, age, disability, or marital status is strictly prohibited. Contractor and its Subcontractors are required to comply with all applicable Federal and California laws including the California Fair Employment and Housing Act (Government Code Sections 12900 et seq.), Government Code Section 11135, and Labor Code Sections 1735, 1777.5, 1777.6, and 3077.5.

9.2 Labor Code Requirements.

(A) ***Eight Hour Day.*** Under Labor Code Section 1810, eight hours of labor constitute a legal day's work under this Contract.

(B) ***Penalty.*** Under Labor Code Section 1813, Contractor will forfeit to City as a penalty, the sum of $25.00 for each day during which a worker employed by Contractor or any Subcontractor is required or permitted to work more than eight hours in any one calendar day or more than 40 hours per calendar week, except if such workers are paid overtime under Labor Code Section 1815.

(C) ***Apprentices.*** Contractor is responsible for compliance with the requirements governing employment and payment of apprentices, as set forth in Labor Code Section 1777.5, which is fully incorporated by reference.

(D) ***Notices.*** Under Labor Code Section 1771.4, Contractor is required to post all job site notices prescribed by law or regulation.

9.3 Prevailing Wages. Each worker performing Work under this Contract that is covered under Labor Code Section 1720 or 1720.9, including cleanup at the Project site, must be paid at a rate not less than the prevailing wage as defined in Sections 1771 and 1774 of the Labor Code. The prevailing wage rates are available online at http://www.dir.ca.gov/dlsr. Contractor must post a copy of the applicable prevailing rates at the Worksite.

(A) ***Penalties.*** Under Labor Code Section 1775, Contractor and any Subcontractor will forfeit to City as a penalty up to $200.00 for each calendar day, or portion a day, for each worker paid less than the applicable prevailing wage rate. Contractor must also pay each worker the difference between the applicable prevailing wage rate and the amount actually paid to that worker.

(B) **Federal Requirements.** If this Project is subject to Federal prevailing wage requirements in addition to California prevailing wage requirements, Contractor and its Subcontractors are required to pay the higher of the current applicable prevailing wage rates under federal law.

9.4 Payroll Records. Contractor must comply with the provisions of Labor Code Sections 1776 and 1812 and all implementing regulations, which are fully incorporated by this reference, including requirements for electronic submission of payroll records.

(A) ***Contractor and Subcontractor Obligations***. Contractor and each Subcontractor must keep accurate payroll records, showing the name, address, social security number, work classification, straight time and overtime hours worked each day and week, and the actual per diem wages paid to each journeyman, apprentice, worker, or other employee employed in connection with the Work. Each payroll record must contain or be verified by a written declaration that it is made under penalty of perjury, stating both of the following:

(1) The information contained in the payroll record is true and correct.

(2) The Contractor or Subcontractor has complied with the requirements of Labor Code Sections 1771, 1811, and 1815 for any Work performed by its employees on the Project.

(B) ***Certified Record.*** A certified copy of an employee's payroll record must be made available for inspection or furnished to the employee or his or her authorized representative on request, to City, or to the Division of Labor Standards Enforcement, and the Division of Apprenticeship Standards of the Department of Industrial Relations, and as further provided by the Labor Code.

(C) ***Enforcement.*** Upon notice of noncompliance with Labor Code Section 1776, Contractor or Subcontractor has ten days in which to comply with requirements of this section. If Contractor or Subcontractor fails to do so within the ten day period, Contractor or Subcontractor will forfeit a penalty of $100.00 per day, or portion a day, for each worker for whom compliance is required, until strict compliance is achieved. Upon request by the Division of Apprenticeship Standards, or the Division of Labor Standards Enforcement, these penalties will be withheld from progress payments then due.

9.5 Labor Compliance. Under Labor Code section 1771.4, the Contract for this Project, if awarded on or after January 15, 2015, is subject to compliance monitoring and enforcement by the California Department of Industrial Relations.

Article 10 - Safety Provisions

10.1 Safety Precautions and Programs. Contractor and its Subcontractors are fully responsible for safety precautions and programs, and for the safety of persons and property in the performance of the Work. Contractor and its Subcontractors must comply with all applicable safety laws, rules and regulations and seek to avoid injury, loss, or damage to persons or property by taking reasonable steps to protect its employees and other persons at the Worksite, materials and equipment stored on or off site, and property at or adjacent to the Worksite.

(A) ***Reporting Requirements.*** Contractor must immediately provide a written report to City of all recordable accidents and injuries occurring at the Worksite. If Contractor is required to file an accident report with a government agency, Contractor will provide a copy of the report to City.

(B) ***Legal Compliance.*** Contractor's safety program must comply with the applicable legal and regulatory requirements. Contractor must provide City with copies of all notices required by law or regulation.

(C) ***Contractor's Obligations.*** Any damage or loss caused by Contractor arising from the Work which is not insured under property insurance must be promptly remedied by Contractor.

(D) ***Remedies.*** If City determines, in its sole discretion, that any part of the Work or Worksite is unsafe, City may, without assuming responsibility for Contractor's safety program, require Contractor or its Subcontractor to cease performance of the Work or to take corrective measures to the City's satisfaction. If Contractor fails to promptly take the required corrective measures, City may perform them and deduct the cost from the Contract Price. Contractor agrees it is not entitled to submit a Claim for damages, for an increase in Contract Price, or for a change in Contract Time based on Contractor's compliance with the City's request for corrective measures pursuant to this provision.

10.2 Hazardous Materials. Unless otherwise specified, this Contract does not include the removal, handling, or disturbance of any asbestos or other Hazardous Materials. If Contractor encounters materials on the Worksite that Contractor reasonably believes to be asbestos or other Hazardous Materials, and the asbestos or other Hazardous Materials have not been rendered harmless, Contractor may continue Work in unaffected areas reasonably believed to be safe, but must immediately cease work on the area affected and report the condition to the City. No asbestos, asbestos-containing products or other Hazardous Materials may be used in performance of the Work.

10.3 Material Safety. Contractor must maintain Material Safety Data Sheets ("MSDS") at the Worksite, as required by law, for materials or substances used or consumed in the performance of the Work. The MSDS will be accessible and available to Contractor's employees, Subcontractors, and City.

(A) ***Contractor Obligations.*** Contractor is solely responsible for the proper delivery, handling, use, storage, removal, and disposal of all materials brought to the Worksite and/or used in the performance of the Work.

(B) ***Labeling.*** Contractor must ensure proper labeling on any material brought onto the Worksite so that any persons working with or in the vicinity of the material may be informed as to the identity of the material, any potential hazards, and requirements for proper handling, protections, and disposal.

Article 11 - Completion and Warranty Provisions

11.1 Final Completion.

(A) ***Final Inspection.*** When the Work required by this Contract is fully performed, Contractor must provide written notification to the Project Manager requesting final inspection. Based on this inspection, the Design Professional will prepare a punch list of items that are incomplete, incorrectly installed, or not operating as required by the Contract Documents. The omission of any such item from this punch list will not relieve the Contractor from fulfilling all requirements of the Contract Documents.

(B) ***Punch List.*** City will deliver the punch list to Contractor and will specify the time by which all of the punch list items must be completed or corrected. The punch list may include City's estimated cost to complete each punch list item if Contractor fails to do so within the specified time.

(C) ***Requirements for Final Completion.*** Final Completion will be achieved upon completion or correction of all punch list items, as verified by inspection, and upon satisfaction of all other Contract requirements, including any commissioning required under the Contract Documents, and submission of all final submittals, including a warranty bond as required under Section 4.4, instructions and manuals as required under Section 7.10, and as-built drawings as required under Section 7.11, all to City's satisfaction. Once Final Completion is achieved, and the Project has been formally accepted by City, City will file a notice of completion with the County Recorder.

(D) ***Final Payment.*** Final Payment and release of retention, less any sums withheld pursuant to the provisions of the Contract Documents, will not be made sooner than 35 days after recordation of the notice of completion. If Contractor fails to complete all of the punch list items within the specified time, City may elect to accept the Project and record the notice of completion, and withhold up to 150% of City's estimated cost to complete the remaining items from Final Payment.

11.2 Warranty.

(A) ***General.*** Contractor warrants that all materials and equipment will be new unless otherwise specified, of good quality, in conformance with the Contract Documents, and free from defective workmanship and materials. Contractor further warrants that the Work will be free from material defects not intrinsic in the design or materials required in the Contract Documents. At City's request, Contractor must furnish satisfactory evidence of the quality and type of materials and equipment furnished. Contractor's warranty does not extend to damage caused by normal wear and tear, or improper use or maintenance.

(B) ***Warranty Period.*** Contractor's warranty must guarantee its Work for a period of one year from the date of recordation of the notice of completion (the "Warranty Period"), except when a longer guarantee is provided by a supplier or manufacturer or is required by the *Specifications* or *Special Conditions*. Contractor must obtain from its Subcontractors, suppliers and manufacturers any special or extended warranties required by the Contract Documents.

(C) ***Warranty Documents.*** As a condition precedent to acceptance, Contractor must supply City with all warranty and guarantee documents relevant to equipment and materials incorporated into the Work and guaranteed by their suppliers or manufacturers.

(D) ***Subcontractors.*** The warranty obligations in the Contract Documents apply to Work performed by Contractor and its Subcontractors, and Contractor expressly agrees to act as co-guarantor of such Work.

(E) ***Contractor's Obligations.*** Upon written notice from City to Contractor of any defect in the Work discovered during the Warranty Period, Contractor or its

responsible Subcontractor must promptly correct the defective Work at its own cost. Contractor's obligation to correct defects discovered during the Warranty Period will continue past the expiration of the Warranty Period as to any defects in Work for which Contractor was notified prior to expiration of the Warranty Period.

(F) ***City's Remedies.*** If Contractor and/or its responsible Subcontractor fails to correct defective Work within ten days following notice by City, or sooner, if required by the circumstances, Contractor expressly agrees that City may correct the defects to conform with Contract Documents at Contractor's sole expense, and Contractor agrees to reimburse City for its direct costs, plus an additional 25% as compensation for the City's administrative costs, within 30 days following City's submission of a demand for payment pursuant to this provision. If City is required to initiate legal action to compel Contractor's compliance with this provision, and City is the prevailing party in such action, Contractor is solely responsible for all of City's attorney's fees and legal costs expended to enforce Contractor's warranty obligations herein in addition to any and all costs incurred by City to correct the defective Work.

11.3 Use Prior to Final Completion. City reserves the right to occupy or make use of the Project, or any portions of the Project, prior to Final Completion if City has determined that the Project or portion of it is in a condition suitable for the proposed occupation or use, and that it is in its best interest to occupy or make use of the Project, or any portions of it, prior to Final Completion. City will notify Contractor in writing of its intent to occupy or make use of the Project or any portions of the Project, pursuant to this provision.

(A) ***Non-Waiver.*** Occupation or use prior to Final Completion will not operate as acceptance of the Work or any portion of it, nor will it operate as a waiver of any of City's rights or Contractor's duties pursuant to these Contract Documents, and will not affect nor bear on the determination of the time of substantial completion with respect to any statute of repose pertaining to the time for filing an action for construction defect.

(B) ***City's Responsibility.*** City will be responsible for the cost of maintenance and repairs due to normal wear and tear with respect to those portions of the Project that are being occupied or used before final completion. The Contract Price or the Contract Time may be adjusted pursuant to the applicable provisions of these Contract Documents if, and only to the extent that, any occupation or use under this Section actually adds to Contractor's cost or time to perform the Work.

11.4 Substantial Completion. For purposes of determining "substantial completion" with respect to any statute of repose pertaining to the time for filing an action for construction defect, "substantial completion" is deemed to mean the last date that Contractor or any Subcontractor performs Work on the Project prior to recordation of the Notice of Completion, except for warranty work performed under this Article.

Article 12 - Dispute Resolution

12.1 Claims. This Article applies to and provides the exclusive procedures for any Claim arising from or related to the Contract or performance of the Work.

(A) ***Definition.*** "Claim" means a separate demand by Contractor, submitted in writing, for change in the Contract Time or Contract Price that has previously been submitted to City in accordance with the requirements of the Contract Documents, and which has been rejected by City, in whole or in part.

(B) ***Limitations.*** A Claim may only include the portion of a previously rejected demand that remains in dispute between Contractor and City. With the exception of any dispute regarding the amount of money actually paid to Contractor as Final Payment, Contractor is not entitled to submit a Claim demanding a change in the Contract Time or the Contract Price, which has not previously been submitted to City in full compliance with Article 5 and Article 6, and subsequently rejected in whole or in part by City.

(C) ***Scope of Article.*** This Article is intended to provide the exclusive procedures for submission and resolution of Claims of any amount, and applies in addition to the provisions of Public Contract Code Sections 20104, et seq.

12.2 Claims Submission. The following requirements apply to any Claim subject to this Article:

(A) ***Substantiation.*** The Claim must be submitted to City in writing and must include all of the documents necessary to substantiate the Claim including the change order request that was rejected in whole or in part, and City's rejection. Any Claim for additional payment must include a complete, itemized breakdown of all labor, materials, taxes, insurance, and subcontract, or other costs. Substantiating documentation such as payroll records, receipts, invoices, or the like, must be submitted in support of each claimed cost. Any Claim for an extension of time or delay costs must be substantiated with schedule analysis and narrative depicting and explaining claimed time impacts.

(B) ***Certification.*** Each Claim must include the following certification, and must be executed by Contractor's authorized representative:

"The undersigned Contractor certifies under penalty of perjury that its statements and representations in this Claim are true and correct. Contractor warrants that this Claim is comprehensive and complete as to the matters in dispute, and agrees that any costs, expenses, or delay claim not included herein is deemed waived. Contractor understands that submission of a Claim which has no basis in fact or which Contractor knows to be false may violate the False Claims Act (Government Code Sections 12650 et seq.)."

(C) ***Submission Deadlines.***

(1) A Claim must be submitted within 15 days following the date that City notified Contractor in writing that a request for a change in the Contract Time or Contract Price, duly submitted in compliance with Article 5 and Article 6, has been rejected in whole or in part.

(2) With the exception of any dispute regarding the amount of Final Payment, any Claim must be filed on or before the date of Final Payment, or will be deemed waived.

(3) A Claim disputing the amount of Final Payment must be submitted within 15 days of the effective date of Final Payment, under Section 8.8, above.

(4) Strict compliance with these Claim submission deadlines is necessary to ensure that any dispute may be mitigated as soon as possible, and to facilitate cost-efficient administration of the Project. Any Claim that is not submitted within the specified deadlines will be deemed waived by Contractor.

12.3 Claims Under $50,000. For any Claim of less than $50,000.00, City will respond in writing within 45 days of receipt of the Claim, or may first request, in writing, within 30 days of receipt of the Claim, any additional documentation supporting the Claim or relating to defenses to the Claim that City may have against Contractor. If Contractor fails to submit the additional documentation to City within 15 days of receipt of City's request, the claim will be deemed waived.

(A) ***Additional Information.*** If additional information is thereafter required, it may be requested and provided upon mutual agreement of City and Contractor.

(B) ***City's Response.*** City's written response to the Claim, as further documented, will be submitted to Contractor within15 days after receipt of the further documentation or within a period of time no greater than that taken by Contractor in producing the additional information, whichever is greater.

(C) ***Non-Waiver.*** Any failure by City to respond within the times specified above may not be construed as acceptance of the Claim in whole or in part, or as a waiver of any provision of these Contract Documents.

12.4 Claims From $50,000 to $375,000. For any Claim of over $50,000.00, and less than or equal to $375,000.00, City will respond in writing within 60 days of receipt of the Claim, or may request, in writing, within 30 days of receipt of the Claim, any additional documentation supporting the Claim or relating to the defenses to the Claim that City may have against Contractor. If Contractor fails to submit the additional documentation to City within 30 days of receipt of City's request, the claim will be deemed waived.

(A) ***Additional Information.*** If additional information is thereafter required, it may be requested and provided upon mutual agreement of City and Contractor.

(B) ***City's Response.*** City's written response to the Claim, as further documented, will be submitted to Contractor within 30 days of receipt of the further documentation, or within a period of time no greater than that taken by the Contractor in producing the additional information or requested documentation, whichever is greater.

(C) ***Non-Waiver.*** Any failure by City to respond within the times specified above may not be construed as acceptance of the Claim in whole or in part, or as a waiver of any provision of these Contract Documents.

12.5 Claims Over $375,000. For any Claim of over $375,000.00, City will respond in writing within 90 days of receipt of the Claim. City may request, in writing, within 45 days of receipt of the Claim, any additional documentation supporting the Claim relating to

defenses to the Claim that City may have against the Contractor. If Contractor fails to submit the additional documentation to City within 45 days of receipt of City's request, the claim will be deemed waived.

(A) ***Additional Information.*** If additional information is thereafter required, it may be requested and provided upon mutual agreement of City and Contractor.

(B) ***City's Response.*** City's response to the Claim, as further documented, will be submitted to Contractor within 45 days after receipt of the further documentation, or within a period of time no greater than that taken by Contractor in producing the additional information or requested documentation, whichever is greater.

(C) ***Non-Waiver.*** Any failure by City to respond within the times specified above may not be construed as acceptance of the Claim in whole or in part, or as a waiver of any provision of these Contract Documents.

12.6 Meet and Confer.

(A) ***Claims up to $375,000.*** For Claims less than or equal to $375,000.00, if Contractor disputes the City's written response, or City fails to respond within the specified time, Contractor must notify City in writing, either within 15 days of receipt of City's response, or within 15 days of City's failure to respond within the specified time, respectively, and demand an informal conference to meet and confer for settlement of the issues in dispute. If Contractor fails to dispute City's response, in writing, within the specified times, Contractor's Claim will be deemed waived.

(1) Upon receipt of the demand to meet and confer, City will schedule the meet and confer conference to be held within 30 days, or later if needed to ensure the mutual availability of all of the individuals that each party requires to represent its interests at the meet and confer conference.

(2) The meet and confer conference will be scheduled at a location at or near City's principal office.

(3) If the Claim or any portion remains in dispute following the meet and confer conference, the parties may agree to mediation, as set forth in Section 12.7, below, or if unable to agree, Contractor may file a claim as provided in Government Code Section 900 et seq. (a "Government Code Claim").

(B) ***Claims over $375,000.*** For any Claim greater than $375,000.00, if Contractor disputes the City's written response, or City fails to respond within the specified time, Contractor must notify City in writing, either within 30 days of receipt of City's response, or within 30 days of City's failure to respond within the specified time, respectively, and demand an informal conference to meet and confer for settlement of the issues in dispute. If Contractor fails to dispute City's response, in writing, within the specified times, Contractor's Claim will be deemed waived.

(1) Upon receipt of the demand to meet and confer, City will schedule the meet and confer conference to be held within 60 days, or later if needed to ensure the mutual availability of all of the individuals that each party requires to represent its interests at the meet and confer conference.

(2) The meet and confer conference will be scheduled at a location at or near City's principal office.

(3) For any Claim or any portion(s) of a Claim that remains in dispute following the meet and confer conference, the parties agree to make a good faith effort to resolve the dispute through mediation as a condition precedent to filing a Government Code Claim and initiating litigation.

12.7 Mediation and Government Code Claims.

(A) ***Mediation.*** Mediation under this Article will be scheduled within 60 days following conclusion of the meet and confer process, with a mediator that the parties mutually agreed upon. The mediation itself may take place more than 60 days following conclusion of the meet and confer process to ensure the mutual availability of the selected mediator and all of the individuals that each party requires to represent its interests. The parties must share the costs of mediation equally, except costs incurred by each party for representation by legal counsel or any other consultant.

(B) ***Government Code Claims***.

(1) Timely presentment of a Government Code Claim is a condition precedent to filing any legal action based on or arising from the Contract.

(2) The time for filing a Government Code Claim will be tolled from the time the Contractor submits its written Claim pursuant to Section 12.2, above, until the time that Claim is denied as a result of the meet and confer process, including any period of time used by the meet and confer process. If the parties agree to mediation pursuant to Section 12.7, below, the time for filing a Government Code Claim will be tolled until conclusion of the mediation by impasse.

12.8 Tort Claims. This Article does not apply to tort claims and nothing in this Article is intended nor shall be construed to change the time periods for filing tort-based Government Code Claims.

12.9 Arbitration. It is expressly agreed, under California Code of Civil Procedure Section 1296, that in any arbitration to resolve a dispute relating to this Contract, the arbitrator's award must be supported by law and substantial evidence.

12.10 Damages. Contractor bears the burden of proving entitlement to and the amount of any claimed damages. Contractor is not entitled to damages calculated on a total cost basis, but must prove actual damages. Contractor is not entitled to recovery of any alleged home office overhead. The Eichleay Formula may not be used for any recovery under the Contract. Contractor is not entitled to consequential damages, including home office overhead or any form of overhead not directly incurred at the Worksite; lost profits; loss of productivity; lost opportunity to work on other projects; diminished bonding capacity; increased cost of financing for the Project; extended capital costs; non-availability of labor, material or equipment due to delays; or any other indirect loss arising from the Contract.

12.11 Multiple Claims. In the interest of efficiency, City, acting in its sole discretion, may elect to process multiple Claims concurrently, in which case the applicable procedures above will be based on the total amount of such Claims rather than the amount of each individual Claim. Any such election will not operate to change or waive any other requirements of this Article.

12.12 Other Disputes. The procedures in this Article 12 will apply to any and all disputes or legal actions, in addition to Claims, arising from or related to this Contract, unless and only to the extent that compliance with a procedural requirement is expressly and specifically waived by City. Nothing in this Article is intended to delay suspension or termination under Article 13.

Article 13 - Suspension and Termination

13.1 Suspension for Cause. In addition to all other remedies available to City, if Contractor fails to perform or correct work in accordance with the Contract Documents, City may immediately order the Work, or any portion of it, suspended until the cause for the suspension has been eliminated to City's satisfaction.

(A) ***Failure to Comply.*** Contractor will not be entitled to an increase in Contract Time or Contract Price for a suspension occasioned by Contractor's failure to comply with the Contract Documents.

(B) ***No Duty to Suspend.*** City's right to suspend the Work will not give rise to a duty to suspend the Work, and City's failure to suspend the Work will not constitute a defense to Contractor's failure to comply with the requirements of the Contract Documents.

13.2 Suspension for Convenience. City reserves the right to suspend, delay, or interrupt the performance of the Work in whole or in part, for a period of time determined to be appropriate for City's convenience, and not due to any act or omission by Contractor or its Subcontractors. Upon notice by City pursuant to this provision, Contractor must immediately suspend, delay, or interrupt the Work as directed by City. The Contract Price and the Contract Time will be equitably adjusted by Change Order to reflect the cost and delay impact occasioned by such suspension for convenience.

13.3 Termination for Default. Contractor may be deemed in default for a material breach of or inability to perform the Contract, including Contractor's refusal or failure to supply sufficient skilled workers, proper materials, or equipment to perform the Work within the Contract Time; refusal or failure to make prompt payment to its employees, Subcontractors, or suppliers or to correct rejected work; disregard of laws, regulations, ordinances, rules, or orders of any public agency with jurisdiction over the Project; or if Contractor lacks financial capacity to complete the Work within the Contract Time; or is otherwise responsible for a material breach of the Contract requirements.

(A) ***Notice.*** Upon City's determination that Contractor is in default, City may provide Contractor and its surety written notice of default and intent to terminate the Contract.

(B) ***Termination.*** Within seven calendar days after notice of intent to terminate for default has been given, unless the default is cured or arrangements to cure the default have been made and memorialized in writing, to City's satisfaction, City may terminate the Contract by written notice to Contractor with a copy to Contractor's surety.

(C) ***Waiver.*** Time being of the essence in the performance of the Work, if Contractor's surety fails to arrange for completion of the Work in accordance with the *Performance Bond*, within seven calendar days from the date of the notice of termination, Contractor's surety will be deemed to have waived its right to complete the Work under the Contract, and City may immediately make arrangements for the completion of the Work through use of its own forces, by hiring a replacement contractor, or by any other means that City determines advisable under the circumstances. Contractor and its surety will be jointly and severally liable for any additional cost incurred by City to complete the Work following termination. In addition, City will have the right to use any materials, supplies, and equipment belonging to Contractor and located at the Worksite for the purposes of completing the remaining Work.

(D) ***Wrongful Termination.*** If a court of competent jurisdiction or an arbitrator later determines that the termination for default was wrongful, the termination will be deemed to be a termination for convenience, and Contractor's damages will be strictly limited to the compensation provided for termination for convenience, in Section 13.4, below. Contractor waives any claim for any other damages for wrongful termination including consequential damages, lost opportunity costs or lost profits.

13.4 Termination for Convenience. City reserves the right to terminate all or part of the Contract for convenience upon written notice to Contractor. Upon receipt of such notice, Contractor must immediately stop the Work, comply with City's instructions to protect the completed Work and materials, and use its best efforts to minimize further costs. In the event of termination for convenience, the parties agree that the following will constitute full and fair compensation to Contractor, and that Contractor will not be entitled to any additional compensation:

(A) ***Completed Work.*** The value of its Work satisfactorily performed to date, including Project overhead and profit based on Contractor's schedule of values;

(B) ***Demobilization.*** Actual and substantiated demobilization costs; and

(C) ***Markup.*** Five percent of the total value of the Work performed as of the date of notice of termination or five percent of the value of the Work yet to be completed, whichever is less.

13.5 Provisions Remaining in Effect. Upon termination pursuant to this Article, the provisions of the Contract Documents remain in effect as to any claim, indemnity obligation, warranties, guarantees, submittals of as-built drawings, instructions, or manuals, or other such rights and obligations arising prior to the termination date.

Article 14 - Miscellaneous Provisions

14.1 Assignment of Unfair Business Practice Claims. Under Public Contract Code Section 7103.5, Contractor and its Subcontractors agree to assign to City all rights, title, and interest in and to all causes of action it may have under Section 4 of the Clayton Act (15 U.S.C. Section 15) or under the Cartwright Act (Chapter 2 (commencing with Section 16700) of Part 2 of Division 7 of the Business and Professions Code), arising from purchases of goods, services, or materials pursuant to the Contract or subcontract. This assignment will be effective at the time City tenders Final Payment to Contractor, without further acknowledgement by the parties.

14.2 Provisions Deemed Inserted. Every provision of law required to be inserted in the Contract Documents is deemed to be inserted, and the Contract Documents will be construed and enforced as though such provision has been included. If it is discovered that through mistake or otherwise that any required provision was not inserted, or not correctly inserted, the Contract Documents will be amended accordingly.

14.3 Waiver. No waiver of a breach, failure of any condition, or any right or remedy contained in or granted by the provisions of the Contract Documents will be effective unless it is in writing and signed by the party waiving the breach, failure, right, or remedy. No waiver of any breach, failure, right, or remedy will be deemed a waiver of any other breach, failure, right, or remedy, whether or not similar, nor will any waiver constitute a continuing waiver unless specified in writing by the waiving party.

14.4 Titles, Headings, and Groupings. The titles and headings used and the groupings of provisions in the Contract Documents are for convenience only and may not be used in the construction or interpretation of the Contract Documents or relied upon for any other purpose.

14.5 Statutory and Regulatory References. With respect to any amendments to any statutes or regulations referenced in these Contract Documents, the reference is deemed to be the version in effect on the date that that bids were due.

SPECIAL CONDITIONS

1. Authorized Work Days and Hours.

A. Authorized Work Hours. Except as expressly authorized in writing by City, Contractor is limited to performing Work on the Project during the following hours: 8:00 a.m. to 5:00 p.m.

2. Insurance Requirements. The insurance requirements of Section 4.3 are modified for this Contract only as set forth below. Except as expressly stated below, all other provisions in Section 4.3 are unchanged and remain in full force and effect.

A. Commercial General Liability ("CGL") Insurance. The CGL limits set forth in subsection 4.3(A)(1) of the *General Conditions* are modified for this Contract to require at least $2,000,000 per occurrence, and at least $5,000,000 aggregate.

FEDERAL REQUIREMENTS

Not Applicable

TECHNICAL SPECIFICATIONS

SECTION TS-1 GENERAL

A. SCOPE OF WORK

The work to be done consists, in general, of resurfacing various streets with slurry seal, asphalt pavement overcoat, removing and replacing traffic striping, legends and markers, traffic control and all other work as shown on the plans and as called for in these technical specifications, appendices to these specifications, Caltrans Standard Specifications, and as directed by the Engineer.

B. SUBMITTALS

After the notice to proceed is issued, but prior to the start of construction, the Contractor shall submit to the City, for approval, all required permits and verification of the location and depth of all existing utilities and underground facilities within the project limits. The Contractor shall notify the Engineer of any discrepancies between the conditions in the field and the project plans. In addition, the Contractor shall submit to the City for approval, prior to the start of construction, the following:

1. Traffic Control Plan – Section TS-5
2. Staging Plan Section TS-6
3. Designation of Traffic Control Supervisor – Section TS-5
4. Haul and Truck Route Proposal – Section TS-1 (M)
5. Emergency Phone Number List
6. Project Schedule including Street List and Date of Work
7. Latex Emulsified Asphalt Slurry Seal
8. Asphalt Pavement Overcoat
9. Thermoplastic Material

<u>The following must be coordinated with the City:</u>

10. Proof of Agreement for Staging Area
11. Door Hanger Template (Notification of Public and City Services)
12. Notification for Newspaper (Notification of Public and City Services)
13. Storm Water Pollution Prevention Plan
14. Resume of Proposed Project Superintendent

Additionally, the Contractor shall submit to the City for approval, prior to the start of construction, the Manufacturer's Cut Sheets and Specifications for the following:

All submittals requiring review, including working drawings required by these Specifications, shall be made to the Engineer at 150 City Park Way, Brentwood, CA 94513, Telephone (925) 516-5420, Fax (925) 516-5421.

Electronic copies of all submittals shall be submitted for approval a minimum of ten (10) calendar days in advance of ordering.

C. ADJACENT PROPERTY OWNERS

The Contractor shall give written notice seven (7) calendar days in advance of construction to notify all property owners and their tenants indicating the date(s) of construction within or

adjacent to their property. The Contractor shall submit to the Engineer a sample letter of notification for approval two (2) working days prior of distribution to property owners. The Contractor may obtain a list of property owners and their addresses from the City of Brentwood.

The Contractor shall provide for continuous ingress and egress to private properties adjacent to work through the period of construction.

The Contractor's attention is directed to Section GC-8.I, "Obstructions and Other Utility's Work", of these Contract Documents pertaining to preservation of property and Contractor's responsibility for damage.

Full compensation for notifying adjacent property owners shall be considered as included in the prices paid for the various contract items of work involved and no additional compensation will be allowed therefor.

D. SOUND CONTROL REQUIREMENTS

Sound control shall conform to the provisions in the City Municipal Code, Section 9.32.030 “Designated Noise Zones”.

The noise level from the Contractor’s operations, between the hours of 7:00 a.m. to 10:00 p.m. (if this time period is approved by the City Engineer), shall not exceed 60 dBa exterior noise level. From 10:00 p.m. to 7:00 a.m. (if this time period is approved by the City Engineer), shall not exceed 45 dBa exterior noise level.

The noise level requirement shall apply to the equipment on the job or related to the job, including but not limited to trucks, transit mixers or transient equipment that may or may not be owned by the Contractor. The use of loud sound signals shall be avoided in favor of light warnings except those required by safety laws for the protection of personnel.

Full compensation for conforming to the requirements of this section shall be considered as included in the prices paid for the various contract items of work involved and no additional compensation will be allowed therefor.

E. LIMITS OF WORK

The street right of way shall be used only for purposes that are necessary to perform the required work. The Contractor shall not occupy the right of way, or allow others to occupy the right of way, for purposes which are not necessary to perform the required work.

Areas available for the use of the Contractor are designated on the plans by easement or right of way lines. Use of the Contractor's work areas and other City-owned property shall be at the Contractor's own risk, and the City shall not be held liable for any damage to or loss of materials or equipment located within such areas.

The Contractor shall remove all equipment, materials, and rubbish from the work areas and other City-owned property which he/she occupies and shall leave the areas in a presentable condition, in accordance with the provisions in Section 4-1.13, "Cleanup," of the Caltrans Standard Specifications.

The Contractor shall secure at his/her own expense any area required for plant sites, storage of equipment or materials, or for other purposes if sufficient area is not available to him/her within the contract limits, or at the sites designated on the plans outside the contract limits.

In the areas of City right of way not designated for the exclusive use by the Contractor, the Contractor shall coordinate with adjacent project and property owners to ensure that storage of materials will not restrict access for those projects or properties. If stored materials must be relocated to provide access, the Contractor shall relocate the stored material at his/her own expense and no claim for costs to relocate the stored materials will be allowed.

The Contractor shall limit his/her operations to the areas immediately adjacent to the project being constructed. Where the specific limits of work are not designated on the plans or specified in these Specifications, the Contractor shall limit his/her operation to the existing road rights of way.

All existing structures, residences, operating utilities, power poles, and other devices within the work area shall be maintained at all times during construction.

Full compensation for conforming to the requirements of this section shall be considered as included in the prices paid for the various contract items of work involved and no additional compensation will be allowed therefor.

F. PERMITS

The Contractor shall ensure that all necessary permits and licenses have been granted prior to commencing work. The Contractor shall not proceed to work in areas requiring permits or licenses until such are obtained. Contractor shall provide for all inspections and permits required by Federal, State, and local authorities and utility agencies in purchasing, transporting and installing materials.

The Contractor shall not hold the City liable for any delays in obtaining any and all permits, licenses or permissions to construct as long as the Contractor has items of work that could be accomplished besides those items that require permits. Additional working days may be allowed due to permit delays at the discretion of the Engineer. Payment for any work and/or coordination related to obtaining permits and complying with the provisions of this Section shall be included in the various other items of work, and no additional compensation will be allowed therefore. However, the City of Brentwood shall pay all permit fees.

The Contractor shall notify the Engineer in writing of pending permit delays five (5) working days before delay will affect progress of work. Additional working day calculations will only be allowed to start five (5) days after Contractor notifies the Engineer of pending permit delays.

G. HAUL ROUTE APPROVAL

The Contractor shall familiarize himself/herself with the condition of the local streets and roads that may be used for hauling material and equipment to and from the job site. Some existing roads may have inadequate pavement sections to support fully loaded trucks or other heavy equipment.

The proposed haul route shall be submitted prior to the start of construction for review and approval by the City Traffic Engineer.

H. WATERING

Watering shall conform to the Provisions in Section 17, "Watering," of the Caltrans Standard Specifications and these Specifications.

Water for construction purposes (with the exception of water to be used for the waterline testing, as specified in the Standard Specifications), shall be the responsibility of the Contractor. The Contractor shall make arrangements for obtaining and purchasing water for construction of the project. The City cannot guarantee the availability of construction water for this project. The Contractor will be required to obtain water through his/her own means if water is not available through the City, at his/her own expense at no additional cost to the City.

Full compensation for providing watering shall be considered as included in the prices paid for the various contract items of work involved and no additional compensation will be allowed therefor.

I. DUST CONTROL

Dust control shall conform to the provisions in Section 14-11.04, "Dust Control," of the Caltrans Standard Specifications and these Specifications.

Attention is directed to "Dust Palliative" of these Specifications regarding the use of a dust palliative to control dust.

The Contractor will be responsible for preventing airborne dust nuisance from the construction site by watering and/or treating the site in such a manner to confine dust particles to the immediate surface of work.

Full compensation for providing dust control shall be considered as included in the prices paid for the various contract items of work involved and no additional compensation will be allowed therefor.

J. DUST PALLIATIVE

Furnishing and applying dust palliative shall conform to the provisions in Section 18, "Dust Palliative," of the Caltrans Standard Specifications.

Full compensation for providing dust palliative shall be considered as included in the prices paid for the various contract items of work involved and no additional compensation will be allowed therefor.

K. ELECTRIC POWER

The Contractor shall furnish electric power required to perform the work.

Contractor is responsible for coordinating with PG&E to energize all electrical systems for the project. Contractor shall be responsible for payment of electricity costs until all electrical facilities are accepted by the City. Contractor is responsible for maintenance of the electrical systems until acceptance of the entire project by the City.

The Contractor shall coordinate electrical with PG&E to coordinate all street lights shutdown and energization per PG&E's LS-2A Rate schedule.

Full compensation for providing electric power shall be considered as included in the prices paid for the various contract items of work involved and no additional compensation will be allowed therefor.

SECTION TS-2 OBSTRUCTIONS AND OTHER UTILITY'S WORK

A. GENERAL

Attention is directed to Section 7.12 “Existing Utilities” of the General Conditions, Section 5-1.36, " Property and Facility Preservation", and Section 15, "Existing Facilities," of the Caltrans Standard Specifications.

Due care shall be exercised to avoid injury to existing improvements, trail and features appurtenant, adjacent property, roadside trees, shrubs, and other plants that are not shown on the plans to be removed.

Trees, shrubs, plants, power poles, pole lines, fences, traffic signs, markers, monuments, and all structures above and below ground that are not slated for removal shall be protected from injury or damage. The Contractor, if ordered by the Engineer, shall provide and install suitable safeguards, approved by the Engineer, to protect such objects from injury or damage. If such objects are injured, damaged, or removed by reason of the Contractor's operations, they shall be immediately replaced or restored at the Contractor's expense.

The Contractor's attention is directed to the existence of certain underground facilities that may require special precautions be taken by the Contractor to protect the health, safety and welfare of workmen and of the public. Facilities requiring special precautions include, but are not limited to: conductors of petroleum products, oxygen, chlorine, and toxic or flammable gases; natural gas in pipelines greater than 150 mm (6 inches) in diameter or pipelines operating at pressures greater than 415 kPa (60 psi) gauge; underground electric supply system conductors or cables, with potential to ground of more than 300 volts, either directly buried or in duct or conduit which do not have concentric grounded conductors or other effectively grounded metal shields or sheaths.

The Contractor shall notify the Engineer and the appropriate regional notification center for operators of subsurface installations at least 2 working days, but not more than 14 calendar days, prior to performing any excavation or other work close to any underground pipeline, conduit, duct, wire or other structure. Regional notification centers include but are not limited to the following:

Notification Center	Telephone Number
Underground Service Alert-Northern California (USA)	1-800-642-2444 1-800-227-2600

If such facilities are not located on the plans in both alignment and elevation, no work shall be performed in the vicinity of said facilities until the owner, or his representative, has located the facility by potholing, probing, or other means that will locate and identify the facility.

The Contractor shall take care to avoid working in any area of the project which may conflict with the work under way by the utility companies. City water, storm drain, sanitary sewer, Pacific Gas and Electric, Pacific Bell, and Cable TV facilities exist within the project area. The Contractor shall exercise extreme caution when excavating or performing any work in the

vicinity of these facilities and will adequately shore and protect all facilities to prevent any horizontal or vertical movement. The Contractor shall be responsible for the repair and replacement of these or any other facilities damaged during construction. A minimum of two (2) working days prior to beginning of construction, the Contractor shall notify Underground Service Alert (USA), telephone 800-642-2444 to have existing facilities marked in the field. The Contractor shall record the USA order number and furnish the order number to the Engineer prior to performing any excavations.

The Contractor shall cooperate completely with all utility companies having facilities within the project area.

Any delay caused by the utility companies in completion of their work will not entitle the Contractor to additional compensation or working days.

B. OTHER EXISTING UTILITIES

The following utilities may have facilities within the Project area:

1. Pacific Gas and Electric (Capital Improvement Projects, Commercial, Industrial, Agricultural)
   Contact: Mr. Barry Carangelo (925) 779-7759
   Delta District
   2111 Hillcrest Avenue
   Antioch, CA 94509

2. AT&T (Telephone) - Construction
   Contact: Mr. Gregory Greenwood (925) 548-4658
   2900 Camino Ramon
   San Ramon, CA 94583

3. Comcast (Cable) - Construction
   Contact: Mr. Ryan Lawrie (925) 349-3481
   757 Arnold Drive, Ste. D
   Martinez, CA 94553

4. East Contra Costa Irrigation District
   Contact: Ms. Pat Corey (925) 634-3544
   626 First Street
   Brentwood, CA 94513

5. Contra Costa County Traffic Signal Maintenance
   Contact: Mr. John Abraham (925) 313-7052
   2467 Waterbird Way
   Martinez, CA 94553

SECTION TS-3 EXISTING FACILITIES

A. GENERAL

The work performed in connection with various Existing Highway Facilities shall conform to the provisions in Section 15, “Existing Facilities,” of the Caltrans Standard Specifications and these Technical Specifications, except that full compensation for conforming to the requirements of this Section for which payment is not otherwise provided shall be considered

as included in the contract prices paid for the various items of work and no separate payment will be made therefor.

Nothing in these Specifications shall relieve the Contractor from his responsibility in conformance with the provisions in Section 7-1.04, “Public Safety”, of the Caltrans Standard Specifications.

Removed materials to be disposed of shall be disposed of in conformance with the provisions in Section 5-1.20B(4), “Contractor-Property Owner Agreement”, of the Caltrans Standard Specifications.

B. EXISTING TREES

Attention is directed to Section 5-1.36, “Property and Facility Preservation” of the Caltrans Standard Specifications.

This project includes work on streets with mature trees adjacent to the roadway. In some locations, the tree canopy may extend over the roadway. It is the responsibility of the Contractor to conduct construction operations around said tree canopy such that the work is accomplished without damaging or injuring tree or tree limbs in any way. If existing trees or shrubs encroach into the public right-of-way and threaten to obstruct the Contractor’s operations, the Contractor shall request permission to trim existing trees or shrubs, at least five (5) working days prior to the date of scheduled tree trimming. All tree and shrub trimming must have prior approval of the Engineer and shall be performed by a Contractor possessing a C-27 or C-61 license.

A special notice pertaining to the tree trimming shall be delivered to the adjacent home or business least two working days before the tree is trimmed. The notice shall be reviewed and approved by the Engineer before delivery.

When permitted by the Engineer, tree pruning shall be performed by a Certified Arborist and in accordance with “Pruning Standards,” published by the Western Chapter of the International Society of Arboriculture. The Arborist can be a person in the employment of the Contractor as long as the person has been certified by the Western Chapter of the International Society of Arboriculture. The Certified Arborist shall be approved in advance by the Engineer, and all pruning shall be done in the presence of the Engineer.

C. EXISTING UTILITIES

This project includes work on streets with overhead utility and service lines. In some locations, these utility and service lines may have minimal vertical clear distance or clearance above the existing elevations within the limits of work. It is the Contractor’s responsibility to conduct operations around the facilities such that the work is accomplished without damage to these facilities. The Contractor shall notify each utility owner at least two (2) working days prior to the planned work operation around these overhead facilities, and shall satisfy all requirements and safety standards for working in close proximity to these utility and service lines, as required.

The fact that any underground facility is not shown upon the plans shall not relieve the Contractor of his responsibility under Section 5-1.36D, “Non-Highway Facilities” of the Caltrans Standard Specifications. It shall be the Contractor’s responsibility, pursuant thereto, to ascertain the location of such underground improvements or facilities which may be subject to damage by reason of his operations.

D. EXISTING DETECTOR LOOPS

The work performed in connection with Existing Detector Loops shall conform to Section 15, “Existing Facilities” of the Caltrans Standard Specifications and these Technical Provisions. At least two (2) working days prior to any planned work operation involving any roadway surface damage or removal, including cold planing, wedge grinding, or any other destructive work in the vicinity of any signalized intersection, the Contractor shall notify Underground Service Alert (USA).

1. Existing loops to remain in place.

   The Contractor shall make every effort to protect the existing traffic signal inductive loop conductors that are to remain in place. If these detector loops are damaged or become inoperative, the Contractor shall notify the Engineer immediately and the Contractor must replace the loops before the end of the working period, unless otherwise directed by the Engineer.

   If any part of the loop conductor, including the portion leading to the adjacent pull box, is damaged by the Contractor’s operations, the entire detector loop shall be replaced at the Contractor’s expense. If any adjacent loop is damaged during replacement, that loop shall also be replaced at the Contractor’s expense and in conformance with the provisions of this Technical Specification Section, “Detector Loops.”

2. Existing loops to be removed and/or replaced.

   At locations where detector loops are to be removed and/or replaced the Contractor shall notify the Engineer at least two (2) working days in advance of the detector loop removal operation. The loops to be replaced as indicated on the Plans and in these Technical Specifications shall be done in conformance with the provisions of the Technical Specification Section, “Replace Signal Detector Loops.”

E. EXISTING TRAFFIC STRIPING, MARKINGS, AND MARKERS

The Contractors’ attention is directed to Section 84-1.03B, “Protection from Damage” of the Caltrans Standard Specifications. Existing traffic stripes, pavement markings and pavement markers that are outside the areas of the slurry seal that are to remain in place shall be protected from wheel marks and other damage by the Contractor. Damaged traffic stripes, pavement markings and pavement markers shall be cleaned or replaced as approved by the Engineer. The restoration of such objects will be at the Contractor’s expense and in conformance with the provisions in the Section “Traffic Stripes and Pavement Markings (Thermoplastic)”, and “Pavement Markers”, of these Technical Specifications.

F. MEASUREMENT AND PAYMENT

Full compensation for furnishing all labor, materials, tools, equipment, and incidentals, and for doing all work in compliance with the Plans, Specifications and this Technical Specification Section, “Existing Highway Facilities,” including but not limited to tree trimming and trimming notifications, shall be considered as included in the contract unit prices paid for various items of work and no additional compensation will be allowed therefor.

SECTION TS-4 NPDES PERMIT

A. GENERAL

The intent of these requirements is to enforce federal, state and local laws, ordinances, codes and regulations that pertain to storm water pollution attributable to construction projects. Storm drains discharge directly to creeks without treatment. Therefore, discharge of pollutants (i.e. any substance, material or waste other than uncontaminated storm water) into the storm drain system is strictly prohibited.

For the purpose of eliminating storm water pollution, the Contractor shall implement effective control measures over the entire project. There are several publications which provide guidance on selecting and implementing effective control measures known as Best Management Practices (BMPs). BMPs include, but are not limited to, schedules of activities, prohibition of practices, general good housekeeping practices, operational practices, pollution prevention practices, maintenance procedures and other management procedures designed to prevent the discharge of pollutants directly or indirectly to the storm drain system. BMPs also include the construction of some facilities which may be required to prevent, control and abate storm water pollution. The reference publications are as follows:

- California Storm Water Best Management Practices Handbook - Industrial/Commercial
- California Storm Water Best Management Practices Handbook - Construction Activity

These handbooks may be purchased from Blue Print Services (BPS), 1700 Jefferson Street, Oakland, California 94612, (510) 287-5485.

B. MATERIAL STORAGE

Storage and exposure of raw materials, by-products, finished products, and containers shall be controlled as described below:

All construction materials shall be stored at least ten (10) feet away from inlets, catch basins, and curb returns. The Contractor shall not allow any material to enter the storm drain system. At the end of each working day, the Contractor shall collect and dispose of all scrap, debris, and waste material.

During wet weather or when rain is forecast, the Contractor shall store materials that can contaminate rainwater or be transported by storm water or other runoff to the storm drain system inside a building or cover them with a tarp or other waterproof material secured with weighted tires or sandbags to prevent contact with rain.

The Contractor is reminded that storage and disposal of all hazardous materials such as paints, thinners, solvents, and fuels; and all hazardous wastes such as waste oil must meet all federal, state and local standards and requirements.

C. DE-WATERING OPERATIONS

All groundwater removed from the trench or excavations must be de-silted prior to discharging it into the storm drain system through filtering materials and methods meeting the Association of Bay Area Governments (ABAG) Standards for Erosion & Sediment Control Measures and/or through methods and procedures described in the California Storm Water Best Management Practice Handbook - Construction Activity (latest edition). A sampling and analysis program for non-visible storm water pollutants must be implemented. Sampling &

analysis guidance can be found in the Fact Sheet of the National Pollutant Discharge Elimination System (NPDES) General Permit for Discharge of Storm Water associated with construction activities Order No. 2009-0009-DWQ (7/1/10) from the following link: http://www.waterboards.ca.gov/water_issues/programs/stormwater/docs/constpermits/wqo_2009_0009_factsheet.pdf

If there is suspicion of soil amendments (such as lime, fly ash, etc.) are being used and they will be exposed to storm water, a sampling and analysis program must be implemented.

D. PAVEMENT SAW-CUTTING OPERATIONS.

The Contractor shall prevent any saw-cutting debris from entering the storm drain system. The Contractor, preferably, shall use dry cutting techniques and sweep up residue. If wet methods are used, the Contractor shall vacuum slurry as cutting proceeds or collect all wastewater by constructing a sand bag sediment barrier. The bermed area shall be of adequate size to collect all wastewater and solids. The Contractor shall allow collected water to evaporate if the wastewater volume is minimal and if maintaining the ponding area does not interfere with public use of the street area or create a safety hazard. If approved by the Engineer, the Contractor may direct or pump saw-cutting wastewater to a dirt area and allow to infiltrate. The dirt area shall be adequate to contain all the wastewater. After wastewater has infiltrated, all remaining saw-cutting residue must be removed and disposed of properly. Remaining silt and debris from the ponding or bermed area shall be removed or vacuumed and disposed of properly.

If a suitable dirt area is not available or discharge to the sanitary sewer is not feasible, with the approval of the Engineer and Contra Costa County Flood Control (CCCFC) & Water Conservation District (WCD), the Contractor shall filter the saw-cutting wastewater through filtering materials and methods meeting ABAG Standards for Erosion and Sedimentation Control Measures (latest edition) before discharging to the storm drain.

E. PAVEMENT OPERATIONS

The Contractor shall prevent the discharge of pollutants from paving operations by using measures to prevent run-on and run-off pollution, disposing of wastes properly, and by implementing the procedures in the Best Management Practices Handbook. In addition, the Contractor shall observe the following guidelines:

1. Paving during wet weather:
   a. No paving while it is raining.
   b. No paving of the top lift of asphalt concrete (AC) on any day that experiences ¼" of rain in a twenty-four (24) hour period.
   c. No paving of bottom lift if previous seventy-two (72) hour period experienced more than ½" rain, unless directed by the Engineer or his designee.

2. Store materials as required under this section.

3. Cover inlets and manholes when applying asphalt, seal coat, tack coat, slurry seal, fog seal, etc.

4. Place drip pans or absorbent materials under paving equipment when not in use. During wet weather, store contaminated paving equipment indoors, or cover with tarp or other waterproof covering.

5. Sweep site daily using mechanical methods to prevent sand, gravel or excess asphalt from entering or being transported by rain into the storm drain system.

6. Keep ample supplies of drip pans or absorbent materials on-site.

7. If paving involves Portland cement concrete, refer to section F6 below.

8. All of the above at the discretion of the Engineer or his designee.

F. CONCRETE OPERATIONS

Do not wash out concrete trucks into storm drains, open ditches, streets, streams, etc. The Contractor shall prevent the discharge of pollutants from concrete operations by using measures to prevent run-on and run-off pollution, properly disposing of wastes, and by implementing the following BMPs:

1. Store all materials in waterproof containers or under cover away from drain inlets or drainage areas.

2. Avoid mixing excess amounts of Portland cement materials. Dispose of any excess materials properly.

3. Whenever possible, perform washout of concrete trucks off-site where discharge is controlled and not permitted to discharge to the storm drain system. For on-site washout:

4. Locate washout area at least fifty (50) feet from storm drains, open ditches or other water bodies, preferably in a dirt area. Confine run-off from this area by constructing a temporary pit or bermed area large enough for the liquid and solid waste.

5. Wash out concrete wastes into the temporary pit where the concrete can set, be broken up and then disposed of properly. If the volume of water is greater than what will allow concrete to set, allow the wash water to infiltrate and/or evaporate, if possible. Remove or vacuum the remaining silt and debris from the ponding or bermed area and dispose of it properly.

6. Dispose of wastewater from washing of exposed aggregate to dirt area. The dirt area shall be adequate to contain all the wastewater and once the wastewater has infiltrated, any remaining residue must be removed.

7. Collect and return sweepings from exposed aggregate concrete to a stockpile or dispose of the waste in trash container.

G. GRADING AND EXCAVATION OPERATIONS

The Contractor shall prepare a 40 scale erosion control plan and submit it to the Engineer for approval, within fifteen (15) days of the Notice To Proceed.

The erosion and sedimentation control materials and methods shall be in accordance with ABAG Standards For Erosion And Sediment Control Measures and/or the procedures and methods described in the California Storm Water Best Management Practice Handbook - Construction Activity (latest edition) and the City of Brentwood's grading ordinance.

Sedimentation and erosion control/filter materials shall be placed in a manner that will retain any debris or sediment from flowing into the storm drain system. The Contractor shall have labor, tools, equipment and materials needed, at the job site, to provide the erosion control measures necessary as a result of earthwork or trenching before beginning or continuing these construction activities. Sand bags and straw wattle shall be stockpiled adjacent to the locations of activity and ready to be installed when the rainfall forecast for 48 hours is 40% or greater or when directed by the Engineer.

The Contractor shall install siltation control devices around catch basins at the end of each working day. These devices shall be maintained at all times during the construction period, and shall be removed when construction is complete.

The Contractor shall not be allowed to block existing drainage flowing onto the work area. The Contractor shall install temporary drainage facilities, if necessary. There shall be no extra compensation to the Contractor for keeping existing drainage open. The Contractor is responsible for any damage to property or existing improvements resulting from blocking existing drainage.

The Contractor shall inspect the sites of work at the beginning and once every 24-hour period through the duration of each storm to assure that inlets and pipes are not blocked with silt or debris and shall be prepared to make repairs to the erosion control devices and take any other remedial measures as directed by the Engineer. At the end of a storm event all depressions with ponded water, the water in catch basins, and the check dam ponds shall be pumped dry and all silt and debris removed. This work shall be completed within twenty-four (24) hours after the end of each storm.

H. SPILL PREVENTION AND CONTROL

The Contractor shall take any and all precautions to prevent accidental spills during the work under this contract. However, in the event of a spill:

1. The Contractor shall immediately contain and prevent leaks and spills from entering the storm drain system, and properly clean-up and dispose of the waste and clean-up materials. If waste is hazardous, the Contractor shall comply with all federal, state and local hazardous waste requirements. All work vehicles should be equipped with spill response kits.

2. The Contractor shall not wash any spilled material into the streets, gutters, storm drains, or creeks.

3. The Contractor shall report any hazardous material spills immediately to the Engineer and the City of Brentwood Police Department, as per hazardous material response protocol.

I. VEHICLE/EQUIPMENT CLEANING

The Contractor shall not perform vehicle or equipment cleaning or maintenance on-site or in the street using soaps, solvents, de-greasers, steam cleaning equipment or equivalent methods. The Contractor shall perform vehicle or equipment cleaning with water only in a designated, bermed area that will not allow rinse water to run off-site or into the storm drain system. The rinse-water shall be permitted to infiltrate in dirt area or shall be discharged to the sanitary sewer with the approval of the Engineer.

The Contractor shall dispose of wash water from the cleaning of water base paint equipment and tools to the sanitary sewer.

If using oil based paint, to the maximum extent practicable, the Contractor shall filter the paint thinner and solvents for reuse and dispose of the waste thinner and solvent, and sludge from cleaning of equipment and tools as hazardous waste. No disposal of oil base materials is allowed into the City sewer system.

J. CONTRACTOR TRAINING AND AWARENESS

The Contractor shall train all employees on the water pollution prevention requirements contained in these specifications. The Contractor shall inform all subcontractors of the water pollution prevention contract requirements and include appropriate subcontract provisions to ensure that these requirements are met.

K. GOOD HOUSEKEEPING PRACTICES

In addition to the practices and procedures discussed above, the Contractor shall implement the following applicable good housekeeping practices.

1. Store materials that have the potential to be transported to the storm drain system by storm run-off or by a spill under cover in a contained area or in sealed waterproof containers.

2. Use tarps on the ground to collect fallen debris or splatters that could contribute to storm water pollution.

3. Secure opened bags of cement, and of other light or powdered materials which can be transported by wind.

4. Pick up litter, construction debris and other wastes daily from outside areas including the sidewalk area, gutter, street pavement and storm drains impacted by the project. All wastes shall be stored in covered containers or disposed of or recycled immediately.

5. Dispose of wash water to the sanitary sewer with the approval of Engineer or recycle wash water (refer to Section D).

6. Inspect vehicles and equipment arriving on-site for leaking fluids and promptly repair leaking vehicles and equipment. Vehicles leaking fluids will not be allowed on the construction site and if not repaired, must be removed.

7. Avoid spills by handling materials carefully. Keep a stockpile of spill control materials, such as rags or absorbents, readily accessible on-site. Clean up all spills immediately to prevent any material from being discharged to the storm drain (refer to Section H).

8. Train employees regularly on good housekeeping practices and BMPs. Assign responsibility to specific employees on BMPs, good housekeeping practices, and what to do in the event of a spill (refer to Section J).

9. Maintain and replace all sediment and water pollution control devices as necessary to ensure that said controls are working effectively (e.g. inspect all sediment ponds or

sandbag sedimentation/filtering systems after each rain. Remove accumulated sediment and debris and replace or repair damaged sandbags immediately).

L. MEASUREMENT AND PAYMENT

All costs associated with conforming to the requirements of this section shall be considered as included in the various bid items of work on this project and no additional compensation will be allowed therefor.

SECTION TS-5 TRAFFIC CONTROL

A. TRAFFIC CONTROL

Traffic control for all work that allows for one (1) lane of traffic in each direction shall be allowed from 8:30 a.m. to 4:00 p.m. Monday through Friday.

Flashing arrow signs are to conform to the requirements of Section 12-3.03, “Flashing Arrow Signs” of the Caltrans Standard Specifications. Flashing arrow signs shall be Type II.

Attention is directed to the Caltrans Standard Specifications: Section 7-1.03, "Public Convenience," Section 7-1.04 "Public Safety," Section 12-3.04 "Portable Delineators," Section 12-1.03 "Flagging Costs," and Section 8-1.06 " Suspensions," and these Specifications.

A minimum of five (5) working days prior to the pre-construction meeting, the Contractor shall submit for the Engineer's approval, a traffic control plan prepared and stamped by a Professional Engineer registered in the State of California for the routing of traffic during construction, including the location of advance warning signs. These detailed plans shall also include the location of public convenience and advance warning signs to be used during the construction. The Contractor's attention is directed to the most recent editions of the California Manual on Uniform Traffic Control Devices (CA MUTCD) for a guide to sign placement, taper lengths, etc. The plan shall be submitted for discussion at the pre-construction meeting. Minor or unexpected traffic control changes shall be submitted in writing to the Engineer no less than two (2) working days before the change for approval. In no case shall changes be made without submittal to and approval of the Engineer. The traffic control plans must be approved prior to beginning work.

B. TRAFFIC CONTROL SUPERVISOR

The Traffic Control System shall be placed, maintained, and removed under the direct supervision of a person who is certified by either the Institute of Transportation Studies (ITS), the American Traffic Safety Services Association (ATSSA), the International Municipal Signal Association, the State of California Department of Transportation (Caltrans) or other agency as approved by the Engineer as having successfully completed training in the design and operation of work zone traffic control.

The Contractor shall designate in writing the person who shall have the responsibility for supervising the activities associated with the Traffic Control System. This designation, along with proof of certification, shall be provided to the Engineer for his approval, two (2) working days in advance of any planned activity that requires traffic control. The person designated shall have the authority to stop the work if necessary.

Failure of the designated person to be present at the job site when any part of the Traffic Control System is in place shall be considered as failure on the part of the Contractor to perform a provision of the contract, and as such, the Engineer may, in accordance with Section 8-1.06 “Suspensions” of the Caltrans Standard Specifications, suspend all work until such time satisfactory arrangements have been made to have a certified person on the job site at all times when the Traffic Control System is in place. No additional compensation or additional working days will be allowed by reason of such suspension. The days on which the suspension is in effect shall be considered working days if such days are considered working days within the meaning of the definition set forth in Section 1-1.07 “Definitions” of the Caltrans Standard Specifications.

When leaving a work area and entering a roadway carrying public traffic, the Contractor's equipment, whether empty or loaded, shall in all cases yield to public traffic. The Contractor's trucks or other mobile equipment which leave a traveled lane, that is open to public traffic, to enter the construction area, shall slow down gradually in advance of the location of the turnoff to give following public traffic an opportunity to slow down. The Contractor shall not use any private driveways or property to turn around or for temporary stockpile of material or staging areas unless written permission is obtained from the property owner by the Contractor. Copies of such permission shall be provided to the Engineer prior to the use of the private property.

If any component in the traffic control system is displaced, or ceases to operate or function as specified, from any cause, during the progress of the work, the Contractor shall immediately repair said component to its original condition or replace said component and shall restore the component to its original location. All traffic control items required by the Engineer to maintain traffic shall be furnished and installed by the Contractor.

If the Contractor does not furnish and maintain all signs, traffic control devices, or surfacing in accordance with these Specifications, the City shall temporarily suspend the work in accordance with the Caltrans Standard Specifications until deficiencies are corrected or shall perform the required operations and bill the Contractor at double the rate of all City expenses.

Section 12-1.03 “Flagging Costs” of the Caltrans Standard Specifications is amended as follows: The Contractor shall pay fully the cost of furnishing all flagmen, including transporting flagmen, to provide for passage of public traffic through the work site.

The adjustment provisions in Section 4-1.05B, "Work-Character Changes" of the Caltrans Standard Specifications shall not apply to the item of traffic control system. Any adjustment in compensation for traffic control system due to an increase or decrease in the amount of traffic control system required by changes ordered by the Engineer, or by increase or decreases in quantities in the Engineer's Estimate greater than 25% will be made on the basis of the cost of the increased or decreased traffic control necessary. Such adjustment will be made on a force account basis as provided in Section 9-1.04, “Force Account,” of the Caltrans Standard Caltrans Specifications for increased traffic control system required by work which is classed as extra work, as provided in Section 4-1.05, “Changes and Extra Work” of the Caltrans Standard Specifications, will be paid for as part of said extra work.

The contract lump sum price paid for "Traffic Control” shall include full compensation for preparing and implementing the traffic control plan, for furnishing all labor, materials, tools, equipment and incidentals, and for doing all work involved in flagging, placing, removing, storing, maintaining, moving to new locations, replacing, and disposing of the components of the traffic control system, including concrete barriers and crash cushions, as specified in the Caltrans Standard Specifications and these Specifications, and as directed by the Engineer.

C. CONSTRUCTION AREA TRAFFIC CONTROL DEVICES

Flagging, signs, and all other traffic control devices furnished, installed, maintained, and removed when no longer required shall conform to the provisions in Section 12, "TemporaryTraffic Control," of the Standard Specifications and these Technical Specifications.

Category 1 traffic control devices are defined as those devices that are small and lightweight (less than 100 lbs), and have been in common use for many years. The devices shall be known to be crashworthy by crash testing, crash testing of similar devices, or years of demonstrable safe performance. Category 1 traffic control devices include traffic cones, plastic drums, portable delineators, and channelizers.

If requested by the Engineer, the Contractor shall provide written self-certification for crashworthiness of Category 1 traffic control devices. Self-certification shall be provided by the manufacturer or Contractor and shall include the following: date, Federal Aid number (if applicable), expenditure authorization, district, county, route and kilometer post of project limits; company name of certifying vendor, street address, city, state and zip code; printed name, signature and title of certifying person; and an indication of which Category 1 traffic control devices will be used on the project. The Contractor may obtain a standard form for self-certification from the Engineer.

Category 2 traffic control devices are defined as those items that are small and lightweight (less than 100 lbs), that are not expected to produce significant vehicular velocity change, but may otherwise be potentially hazardous. Category 2 traffic control devices include: barricades and portable sign supports.

Category 2 devices purchased on or after October 1, 2000 shall be on the Federal Highway Administration (FHWA) Acceptable Crashworthy Category 2 Hardware for Work Zones list. This list is maintained by FHWA and can be located at the following internet address: http://safety.fhwa.dot.gov/fourthlevel/hardware/listing.cfm?code=workzone.

The Department maintains a secondary list at the following internet address: http://www.dot.ca.gov/hq/traffops/signtech/signdel/pdf.htm.

Category 2 devices that have not received FHWA acceptance, and were purchased before October 1, 2000, may continue to be used until they complete their useful service life or until January 1, 2003, whichever comes first. Category 2 devices in use that have received FHWA acceptance shall be labeled with the FHWA acceptance letter number and the name of the manufacturer by the start of the project. The label shall be readable. After January 1, 2003, all Category 2 devices without a label shall not be used on the project.

If requested by the Engineer, the Contractor shall provide a written list of Category 2 devices to be used on the project at least 5 days prior to beginning any work using the devices. For each type of device, the list shall indicate the FHWA acceptance letter number and the name of the manufacturer.

Full compensation for providing self-certification for crashworthiness of Category 1 traffic control devices and for providing a list of Category 2 devices used on the project and labeling Category 2 devices as specified shall be considered as included in the prices paid for the various contract items of work requiring the use of the Category 1 or Category 2 traffic control devices and no additional compensation will be allowed therefor.

D. CONSTRUCTION AREA SIGNS

Construction area signs shall be furnished, installed, maintained, and removed when no longer required in conformance with the provisions in Section 12, "Temporary Traffic Control," of the Standard Specifications and these Technical Specifications.

The Contractor shall notify the appropriate regional notification center for operators of subsurface installations at least 2 working days, but not more than 14 calendar days, prior to commencing excavation for construction area sign posts. The regional notification centers include, but are not limited to, the following:

Notification Center	Telephone Number
Underground Service Alert-Northern California (USA)	1-800-642-2444 1-800-227-2600
Underground Service Alert-Southern California (USA)	1-800-422-4133 1-800-227-2600

Excavations required to install construction area signs shall be performed by hand methods without the use of power equipment, except that power equipment may be used if it is determined there are no utility facilities in the area of the proposed post holes.

The Contractor may be required to cover certain signs during the progress of the work. Signs that are no longer required or that convey inaccurate information to the public shall be immediately covered or removed, or the information shall be corrected. Covers for construction area signs shall be of sufficient size and density to completely block out the complete face of the signs. The retroreflective face of the covered signs shall not be visible either during the day or at night. Covers shall be fastened securely so that the signs remain covered during inclement weather. Covers shall be replaced when they no longer cover the signs properly.

E. MAINTAINING TRAFFIC

Attention is directed to Sections 7-1.03, "Public Convenience," 7-1.04, "Public Safety," and Section 12, "Temporary Traffic Control," of the Caltrans Standard Specifications and to the provisions in "Public Safety" of these Technical Specifications. Nothing in these Technical Specifications shall be construed as relieving the Contractor from the responsibilities specified in Section 7-1.04.

Lane closures shall conform to the provisions in section "Traffic Control System for Lane Closure" of these Technical Specifications.

Personal vehicles of the Contractor's employees shall not be parked on the traveled way or shoulders including any section closed to public traffic.

The Contractor shall notify local authorities of the Contractor's intent to begin work at least 5 days before work is begun. The Contractor shall cooperate with local authorities relative to handling traffic through the area and shall make arrangements relative to keeping the working area clear of parked vehicles.

Whenever vehicles or equipment are parked on the shoulder within 6 feet of a traffic lane, the shoulder area shall be closed with fluorescent traffic cones or portable delineators placed on a taper in advance of the parked vehicles or equipment and along the edge of the pavement at

25 foot intervals to a point not less than 25 foot past the last vehicle or piece of equipment. A minimum of 9 cones or portable delineators shall be used for the taper. A C23 (Road Work Ahead) or C24 (Shoulder Work Ahead) sign shall be mounted on a portable sign stand with flags. The sign shall be placed where designated by the Engineer.

Bicyclists may be accommodated by keeping the bike lanes open whenever possible and using the sidewalk when the bike lanes are closed. Sidewalks will remain open to pedestrians whenever possible and if they need to be closed all pedestrians will be detoured to the opposite side of the street. Sidewalk related work will only be allowed to occur on one side of the street at a time. All pedestrians will be crossed at signalized intersections.

The full width of the traveled way shall be open for use by public traffic on Saturdays, Sundays and designated legal holidays; after 2:30 p.m. on Fridays and the day preceding designated legal holidays; and when construction operations are not actively in progress.

Minor deviations from the requirements of this section concerning hours of work which do not significantly change the cost of the work may be permitted upon the written request of the Contractor if, in the opinion of the Engineer, public traffic will be better served and the work expedited. These deviations shall not be adopted by the Contractor until the Engineer has approved the deviations in writing. Other modifications will be made by contract change order.

Full compensation for maintaining traffic shall be considered as included in the lump sum prices paid for the traffic control system and no additional compensation will be allowed therefor.

F. CLOSURE REQUIREMENTS AND CONDITIONS

Lane closures shall conform to the provisions in "Maintaining Traffic" of these Technical Specifications.

The term closure, as used herein, is defined as the closure of a traffic lane or lanes, including ramp or connector lanes, within a single traffic control system.

1. CLOSURE SCHEDULE

By noon Monday, the Contractor shall submit a written schedule of planned closures for the following week period, defined as Friday noon through the following Friday noon.

The Closure Schedule shall show the locations and times when the proposed closures are to be in effect. The Contractor shall use the Closure Schedule request forms furnished by the Engineer. Closure Schedules submitted to the Engineer with incomplete, unintelligible or inaccurate information will be returned for correction and resubmittal. The Contractor will be notified of disapproved closures or closures that require coordination with other parties as a condition of approval.

Amendments to the Closure Schedule, including adding additional closures, shall be submitted to the Engineer, in writing, at least 3 working days in advance of a planned closure. Approval of amendments to the Closure Schedule will be at the discretion of the Engineer.

The Contractor shall confirm, in writing, all scheduled closures by no later than 8:00 a.m. 3 working days prior to the date on which the closure is to be made. Approval or denial of

scheduled closures will be made no later than 4:00 p.m. 2 working days prior to the date on which the closure is to be made. Closures not confirmed or approved will not be allowed.

Confirmed closures that are cancelled due to unsuitable weather may be rescheduled at the discretion of the Engineer for the following working day.

2. CONTINGENCY PLAN

The Contractor shall prepare a contingency plan for reopening closures to public traffic. The Contractor shall submit the contingency plan for a given operation to the Engineer within one working day of the Engineer's request.

3. LATE REOPENING OF CLOSURES

If a closure is not reopened to public traffic by the specified time, work shall be suspended in conformance with the provisions in Section 8-1.06, "Suspensions," of the Caltrans Standard Specifications. The Contractor shall not make any further closures until the Engineer has accepted a work plan, submitted by the Contractor, that will insure that future closures will be reopened to public traffic at the specified time. The Engineer will have two (2) working days to accept or reject the Contractor's proposed work plan. The Contractor will not be entitled to any compensation for the suspension of work resulting from the late reopening of closures.

For each 5-minute interval, or fraction thereof past the time specified to reopen the closure, $100 per interval will be deducted from monies due or that may become due to the Contractor under the contract.

4. COMPENSATION

The Contractor shall notify the Engineer of any delay in the Contractor's operations due to the following conditions, and if, in the opinion of the Engineer, the Contractor's controlling operation is delayed or interfered with by reason of those conditions, and the Contractor's loss due to that delay could not have been avoided by rescheduling the affected closure or by judicious handling of forces, equipment and plant, the delay will be considered an excusable delay within the meaning of Section 1-1.07 “Definitions”, of the Caltrans Standard Specifications and compensation for the delay will be determined in conformance with the provisions in Section 8-1.07 “Delays” of the Caltrans Standard Specifications:

a. The Contractor's proposed Closure Schedule is denied and his planned closures are within the time frame allowed for closures in "Maintaining Traffic" of these Technical Specifications, except that the Contractor will not be entitled to any compensation for amendments to the Closure Schedule that are not approved.
b. The Contractor is denied a confirmed closure.

Should the Engineer direct the Contractor to remove a closure prior to the time designated in the approved Closure Schedule, any delay to the Contractor's schedule due to removal of the closure will be considered an excusable delay.

G. TRAFFIC CONTROL SYSTEM FOR LANE CLOSURE

A traffic control system shall consist of closing traffic lanes in conformance with the provisions in Section 12, "Temporary Traffic Control," of the Caltrans Standard Specifications, the

provisions under "Maintaining Traffic" and "Construction Area Signs" of these Technical Specifications.

The provisions in this section will not relieve the Contractor from the responsibility to provide additional devices or take measures as may be necessary to comply with the provisions in Section 7-1.04, "Public Safety," of the Caltrans Standard Specifications.

If components in the traffic control system are displaced or cease to operate or function as specified, from any cause, during the progress of the work, the Contractor shall immediately repair the components to the original condition or replace the components and shall restore the components to the original location.

When lane closures are made for work periods only, at the end of each work period, components of the traffic control system, except portable delineators placed along open trenches or excavation adjacent to the traveled way, shall be removed from the traveled way and shoulder. If the Contractor so elects, the components may be stored at selected central locations designated by the Engineer within the limits of the highway right of way.

One-way traffic shall be controlled through the project in conformance with the plan entitled "Traffic Control System for Lane Closure on Two Lane Conventional Highways" and these Technical Specifications.

The contract lump sum price paid for traffic control system shall include full compensation for furnishing all labor (including flagging costs), materials (including signs), tools, equipment, and incidentals, and for doing all the work involved in placing, removing, storing, maintaining, moving to new locations, replacing, and disposing of the components of the traffic control system and for furnishing and operating the pilot car, (including driver, radios, other equipment, and labor required), as shown on the plans, as specified in the Caltrans Standard Specifications and these Technical Specifications, and as directed by the Engineer. Flagging costs will not be paid for as provided in Section 12-1.03, "Flagging Costs," of the Caltrans Standard Specifications.

The adjustment provisions in Section 4-1.05, "Changes and Extra Work," of the Caltrans Standard Specifications shall not apply to the item of traffic control system. Adjustments in compensation for traffic control system will be made only for increased or decreased traffic control system required by changes ordered by the Engineer and will be made on the basis of the cost of the increased or decreased traffic control necessary. The adjustment will be made on a force account basis as provided in Section 9-1.03, "Force Account," of the Caltrans Standard Specifications for increased work and estimated on the same basis in the case of decreased work.

Traffic control system required by work which is classed as extra work, as provided in Section 4-1.05 “Changes and Extra Work” of the Caltrans Standard Specifications, will be paid for as a part of the extra work.

H. TEMPORARY PAVEMENT DELINEATION

Temporary pavement delineation shall be furnished, placed, maintained, and removed in conformance with the provisions in Section 12-3.01, "General," of the Caltrans Standard Specifications and these Technical Specifications. Nothing in these Technical Specifications shall be construed as reducing the minimum standards specified in the Manual on Uniform Traffic Control Devices (MUTCD), MUTCD California Supplement, or as relieving the

Contractor from the responsibilities specified in Section 7-1.04, "Public Safety," of the Caltrans Standard Specifications.

1. GENERAL

Whenever the work causes obliteration of pavement delineation, temporary or permanent pavement delineation shall be in place prior to opening the traveled way to public traffic. Laneline or centerline pavement delineation shall be provided at all times for traveled ways open to public traffic.

The Contractor shall perform the work necessary to establish the alignment of temporary pavement delineation, including required lines or marks. Surfaces to receive temporary pavement delineation shall be dry and free of dirt and loose material. Temporary pavement delineation shall not be applied over existing pavement delineation or other temporary pavement delineation. Temporary pavement delineation shall be maintained until superseded or replaced with a new pattern of temporary pavement delineation or permanent pavement delineation.

Temporary pavement markers, including underlying adhesive, and removable traffic tape which are applied to the final layer of surfacing or existing pavement to remain in place or which conflicts with a subsequent or new traffic pattern for the area shall be removed when no longer required for the direction of public traffic, as determined by the Engineer.

I. TEMPORARY LANELINE AND CENTERLINE DELINEATION

Whenever lanelines or centerlines are obliterated and temporary pavement delineation to replace the lines is not shown on the plans, the minimum laneline and centerline delineation to be provided for that area shall be temporary pavement markers placed at longitudinal intervals of not more than 24 feet. The temporary pavement markers shall be the same color as the laneline or centerline the pavement markers replace. Temporary pavement markers shall be, at the option of the Contractor, one of the temporary pavement markers listed for short term day/night use (14 days or less) or long term day/night use (6 months or less) in "Prequalified and Tested Signing and Delineation Materials" of these Technical Specifications. The temporary pavement markers shall be placed in conformance with the manufacturer's instructions. Temporary pavement markers for long term day/night use (6 months or less) shall be cemented to the surfacing with the adhesive recommended by the manufacturer, except epoxy adhesive shall not be used to place the temporary pavement markers in areas where removal of the temporary pavement markers will be required. The Contractor will not be allowed to slurry over any temporary pavement markers and all Temporary pavement markers shall be placed on top of the new pavement surface.

Temporary laneline or centerline delineation consisting entirely of temporary pavement markers listed for short term day/night use (14 days or less), shall be placed on longitudinal intervals of not more than 24 feet and shall be used for a maximum of 14 days on lanes opened to public traffic. Prior to the end of the 14 days the permanent pavement delineation shall be placed. If the permanent pavement delineation is not placed within the 14 days, the Contractor shall replace the temporary pavement markers and provide additional temporary pavement delineation and shall bear the cost thereof. The additional temporary pavement delineation to be provided shall be equivalent to the pattern specified for the permanent pavement delineation for the area, as determined by the Engineer.

Where "no passing" centerline pavement delineation is obliterated, the following "no passing" zone signing shall be installed prior to opening the lanes to public traffic. C18 (ROAD CONSTRUCTION AHEAD) or C23 (ROAD WORK AHEAD) signs shall be installed from 1,000 feet to 2,000 feet ahead of "no passing" zones. R63 (DO NOT PASS) signs shall be installed at the beginning and at every 2,000 feet interval within "no passing" zones. For continuous zones longer than 2 miles, W71 (NEXT _____ MILES) signs shall be installed beneath the C18 or C23 signs installed ahead of "no passing" zones. R64 (PASS WITH CARE) signs shall be installed at the end of "no passing" zones. The exact location of "no passing" zone signing will be as determined by the Engineer and shall be maintained in place until permanent "no passing" centerline pavement delineation has been applied. The signing for "no passing" zones, shall be removed when no longer required for the direction of public traffic. The signing for "no passing" zones shall conform to the provisions in "Construction Area Signs" of these Technical Specifications, except for payment.

J. MEASUREMENT AND PAYMENT

Full compensation for furnishing, placing, maintaining, and removing the temporary pavement markers (including underlying adhesive, layout (dribble) lines to establish alignment of temporary pavement markers or used for temporary laneline and centerline delineation and signing specified for "no passing" zones) for those areas where temporary laneline and centerline delineation is not shown on the plans and for providing equivalent patterns of permanent traffic lines for those areas when required, shall be considered as included in the contract prices paid for the items of work that obliterated the laneline and centerline pavement delineation and no separate payment will be made therefor.

SECTION TS-6 STAGING

A. GENERAL

The Contractor shall survey the area for construction staging point locations and shall negotiate the use of private property with the property owner. The Contractor shall show proof of an agreement prior to using any private property for a staging area and the City shall approve the conditions of the agreement. No staging or storage of materials will be allowed on the public right of way unless specifically requested by the Contractor and approved in writing by the Engineer.

The Contractor shall prepare a Staging Plan that includes every phase of construction. The Staging Plan shall be submitted to the Engineer within 10 days of the notice to proceed. Work shall not proceed without the Engineer’s advance approval of the Staging Plan.

The staging plan needs to consider the locations of schools and other facilities that have high volumes of traffic that will be affected by the construction. The Contractor shall schedule his operations to minimize the impact on traffic.

Upon completion of the project or as specified in the staging agreement and plan, the Contractor shall clean the site and return the site to its original condition. The Contractor shall replace with like materials any improvement damaged by the Contractor’s staging operations. Should the Contractor fail to perform these duties, the Engineer, at the Engineer’s sole discretion, may elect to have City, or contract forces, perform the duties, deducting the expenses incurred from any moneys that are due, or become due, to the Contractor. By exercising this option, the Contractor is in no way relieved of the responsibility to perform these duties.

B. MEASUREMENT AND PAYMENT

Full compensation for furnishing all labor, materials, tools, equipment, and incidentals, and for doing all work in compliance with the Plans, Specifications and this Technical Specification Section, “Staging,” shall be considered as included in the contract unit prices paid for various items of work and no additional compensation will be allowed therefor.

SECTION TS-7 NOTIFICATION OF THE PUBLIC AND CITY SERVICES

A. GENERAL

At ten (10) working days and again at two (2) working days prior to mobilizing to a site or performing any action which affects residents, schools or businesses, the Contractor shall distribute an approved written, “door hanger” type notice to all adjoining residents and businesses, property owners, tenants and applicable parties. Such notice shall state that all vehicles and equipment need to be moved off of the street and include the expected date for start of construction, a general description of the construction activity to take place, expected duration of the activity, traffic delays, alternative routes, driveway closures and the name, address, and a 24-hour local telephone number of the Contractor.

A draft copy of the notice shall be provided to the Engineer for approval, prior to distribution. The Contractor shall notify all residents and businesses within at least 300 feet of the work. It is the Contractor’s responsibility to keep all affected residents, schools and businesses notified of the work and work schedule, and to provide whatever facilities are necessary to assure the minimum possible inconvenience to their lives and operations.

Five (5) working days prior to construction activities, the following parties shall also be notified:

Brentwood Union School District
Contact: Gail Crockett
Phone: (925) 513-4113
255 Guthrie Lane
Brentwood, CA 94513

Tri Delta Transit
Phone: (925) 754-6622
801 Wilbur Avenue
Antioch, CA 94509

Postal Service
Contact: Eric O’Neil
Phone: 1 (800) 275-8777
18 Oak St
Brentwood, CA 94513-9998

Police Department
Phone: (925) 634-6911 (Non-Emergency)
Dispatch (24 hrs) (925) 778-2441
9100 Brentwood Blvd.
Brentwood, CA 94513

Liberty Union School District
Contact: Ana Mendoza
Phone: (925) 634-2166 x 2032
20 Oak Street
Brentwood, CA 94513

East Diablo Fire Protection District
Phone: (925) 634-3400
134 Oak Street
Brentwood, CA 94513

Disposal Company/City of Brentwood
Contact: Jon Carlson
Phone: (925) 516-6095
2301 Elkins Way
Brentwood, CA 94513

Chamber of Commerce
Bonnie Luchese
Phone: (925) 634-3344
240 Oak St
Brentwood, CA 94513

Contractor shall coordinate with the Disposal Company/City of Brentwood for scheduling trash pickup services around construction activities such that interruption in service is minimized.

Each Saturday and Sunday, before the start of the coming work week, the Contractor shall publish in the local paper a map of where the work will take place and a work schedule. This shall include the location, limits, date and description of work to be done. The Contractor shall also include the company name, address and a 24-hour local telephone number in the publication. The information shall also be submitted immediately to the Engineer. This notification shall be submitted to the City for approval prior to publication.

The Contractor shall provide the Engineer a copy of the proposed written notification prior to mailing or delivery for approval at least 5 days prior to their distribution. The Contractor shall provide a copy of the written notification as mailed or delivered, as well as a list of all recipients of such notifications. The Contractor shall maintain an updated and chronological record at the job site of all written notifications along with a list of recipients. Such records shall be made available to the engineer upon request. All information shall be submitted to the project manager for the City of Brentwood for inclusion on the City of Brentwood Web Page.

Delays in performing the work or changes in the construction schedule, for any reason, shall require the Contractor to provide written re-notification to residents, businesses, City services and the local newspaper within 24 hours that any delay or change is reported to or discovered by the Engineer. If the local paper publishes an incorrect schedule, The Contractor shall re-publish the correct schedule to run the following two (2) consecutive days.

Failure to properly notify residents will necessitate the Contractor to reschedule his work with no additional working days to be added to the Contract and additional liquidated damages applied per Notice Inviting Bids.

The Contractor shall not impede or impair waste haulers, recycling operations and buses within the project area. It is the Contractor's responsibility to determine which waste haulers, recycling operators and buses are scheduled to work/run in the project area and to develop a project schedule that will not impede or impair their operations.

The Contractor shall maintain a local 24-hour telephone line. The Contractor shall check for messages hourly from 7:00 a.m. to 6:00 p.m. and at least once every twelve (12) hours during nights, weekends and holidays. The Contractor shall respond promptly to all messages.

Traffic control shall be coordinated for the minimum inconvenience and maximum safety of the public during the construction period. The Contractor shall bear full responsibility for maintaining traffic control during the construction period. Contractor shall maintain traffic circulation at all times during the project. "No Parking" signs shall be posted seventy-two (72) hours prior to start of work. See "Traffic Control," in these Technical Specifications for additional requirements.

B. MEASUREMENT AND PAYMENT

Full compensation for furnishing all labor, materials, tools, equipment, and incidentals, and for doing all work in compliance with the Plans, Specifications and this Technical Specification Section, "Notification of the Public and City Services," including but not limited to installing and maintaining a 24-hour local telephone, running newspaper publications and re-notification, and coordinating with scheduled public services as described herein, shall be considered as included in the contract unit prices paid for various items of work and no additional compensation will be allowed therefor. Traffic control shall be measured and paid per the section on "Traffic Control" in these Technical Specifications.

SECTION TS-8 PROJECT APPEARANCE AND STREET SWEEPING

A. GENERAL

The Contractor shall maintain a neat appearance to the work site. Debris developed during construction shall be disposed concurrently with its generation. Stockpiling of debris or construction material shall not be allowed unless otherwise approved by the Engineer.

Streets shall be swept daily and immediately following all work. The Contractor shall sweep the street with a power pick-up broom immediately prior to, and after, the paving operations. The Contractor shall keep a power sweeper on the job at all times and it shall be used to keep the streets free of loose or tracked material from the Contractor's operations. If the Contractor does not furnish and keep a power sweeper on the job at all times in accordance with these Technical Specifications, the City shall rent or provide the equipment needed to perform the operations and will bill the Contractor.

The Contractor shall provide sanitary facilities for the use of the workers on the job. Such facilities shall be placed and maintained by the Contractor so as not to be aesthetically displeasing or annoying to the neighbors, or offensive to the senses of the community standards of decency. The Engineer shall be the sole judge of the adequacy of the facility, the placement, and maintenance thereof. Upon notification by the Engineer of deficiencies in any of these areas, the Contractor shall make immediate corrections. Failure to take corrective action within 24 hours shall give the Engineer due cause to stop work and order the corrective work to be done on the sanitary facility and to charge all costs against the monies due or become due to the Contractor.

B. MEASUREMENT AND PAYMENT

Full compensation for furnishing all labor, materials, tools, equipment, and incidentals, and for doing all work in compliance with the Plans, Specifications and this Technical Specification Section, “Project Appearance and Street Sweeping,” shall be considered as included in the contract unit prices paid for various items of work and no additional compensation will be allowed therefor.

SECTION TS-9 TYPE II SLURRY SEAL

A. SCHEDULE

The placing of slurry seal shall be scheduled in a manner to ensure proper curing, to permit opening of the slurried surface to vehicular traffic no later than 4:00 p.m. on the same day the surface has been slurried.

B. GENERAL

The work to be performed in connection with Slurry Seal involved in the various other items of work shall be in accordance with Section 37-3 “Slurry Seal and Micro-Surfacing” of the Caltrans Standard Specifications and as modified by these Technical Specifications herein.

C. LATEX EMULSIFIED ASPHALT SLURRY SEAL

Latex emulsified asphalt shall be a quick traffic, quick cure (QT-QC) type, shall be homogeneous and show no separation after thorough mixing, shall break and set on the aggregate within five (5) minutes and be ready for cross-traffic within five to thirty minutes. The latex asphalt emulsion shall conform to the requirements listed below.

D. LATEX ASPHALT EMULSION REQUIREMENTS

TEST ON EMULSION	METHOD OF TEST	REQUIREMENTS
Viscosity, SSF, @ 77° F., sec	ASTM D244	15 – 100
pH		2 +- 1
Distillation Residue %, Minimum		60
TEST ON RESIDUE FROM DISTILLATION TEST		
Penetration, 77° F., 100g, 5s	ASTM D5	40 - 80
Softening Point (Ring & Ball), °F.	ASTM D36	120 – 147
Ductility, 75° F., 5CM/Min, Minimum	ASTM D113	25
Fraass-Breaking Point (°C.)	DIN 52012	-18

E. MATERIALS

1. Aggregate. The use of crushed granite or other light gray-colored aggregate will not be allowed. Aggregate shall consist of Table Mountain or other rock similar in color and nature (black), except that any aggregate or combination of aggregates shall be produced by crushing rock. All materials shall be free from vegetable matter and other deleterious substances, oversized particles, and caked lumps. The percentage composition by weight of the aggregate shall conform to the following grading (see next page):

PERCENTAGE PASSING	
SIEVE SIZES	TYPE II
3/8”	100
No. 4	90 – 100
No. 8	65 – 90
No. 16	45 – 70
No. 30	30 – 50
No. 200	5 – 15
Theoretical asphalt content, % dry aggregate	7.5 – 13.51 %
Approximate application rate (pounds/sq. yd.)	12 – 18

The aggregate shall also conform to the following quality requirement:

TEST ON EMULSION	METHOD OF TEST	REQUIREMENT
Sand Equivalent	California Method 217, or ASTM D2419	in.

2. Mineral Filler. The mineral filler shall be either Portland Cement or other approved mineral fillers, if required. Portland Cement, if used, shall be commercially available Type I-II and shall be free of lumps and clods.

3. Water. Water shall be free of harmful, soluble salts and shall be of such quality that the asphalt shall not separate from the emulsion before the emulsion mix is in place in the work.

4. Carboxylated Polymer Latex. Poly-chloroprene-methacrylic acid latex with polyvinyl alcohol shall be added to be water/soap phase prior to the mill manufacture of the emulsified asphalt by the emulsion producer. The amount of latex shall be between 3.5% and 4.5% of the asphalt residual content. Samples shall be provided and shall conform to the following requirements:

TEST	REQUIREMENTS
Total solids, min, %	47
Average particle size um (micron)	0.3
pH at 25° C.	7
Brookfield viscosity at 25° C.	350 - 5000
Mechanical stability, min.	650

5. Proportioning. The mix shall be proportioned as follows:

   a. Latex Emulsified Asphalt. Latex emulsified asphalt shall be added at a rate from eleven (11) to fifteen (15) percent by weight of dry aggregate. The exact rate to be determined by a job mix design submitted by the Contractor for approval by the Engineer.

      Latex emulsion mix shall be proportioned by the operation of a single start-stop switch or lever which automatically sequences the introduction of aggregate, latex emulsion asphalt, mineral filler, admixture and water to the pugmill.

      Calibrated sight flowmeters shall be provided to measure both the addition of water and liquid admixtures to the pugmill.

Mineral filler shall be added to the aggregate at the rate of 1% to 2.5% by weight of the dry aggregate, if required by the mix design.

b. Job Mix Design. A job mix design shall be performed by an approved testing laboratory. The job mix design shall include testing of the aggregate, latex emulsified asphalt, filler, water and additive properly proportioned to attain maximum stability at a minimum emulsion content.

The stability tests shall be performed in accordance with modified ASTM procedures. Marshall stabilities shall not be less than 1,500 pounds and the flow shall be between 6 and 16 units.

6. Equipment. The following equipment will be required:
   a. Mixing. The latex emulsion mix shall be mixed in a self-propelled mixing machine equipped with a continuous flow pugmill, capable of accurately delivering and automatically proportioning the aggregate, latex emulsified asphalt, mineral filler, water and admixtures to a double shafted, multi-blade pugmill mixer capable of minimum speeds of 200 revolutions per minute. Latex emulsion mix retention time in the pugmill shall be less than three seconds. The mixing machine shall have sufficient storage capacity of aggregate, latex emulsified asphalt, mineral filler and water to maintain an adequate supply to the proportioning controls and make 15 tons of emulsion mix.

   The mixing machine shall be equipped with hydraulic controls for proportioning the material by volume to the mix. Each material control device shall be calibrated, properly marked, preset and lockable at the direction of the Engineer.

   The mixing machine shall be equipped with a water pressure system and nozzle- type spray bars to provide a water spray immediately ahead of the spreader box.

   The mixing machine shall be equipped with an approved fines feeder that provides a uniform, positive, accurately metered, pre-determined amount of the mineral filler at the same time and location that the aggregate is fed.

7. Placement. The slurry seal mixture shall be placed in accordance with requirements of Section 37-3 “Slurry Seal and Micro-Surfacing” of the Caltrans Standard Specifications and as follows:
   a. Prior to beginning the slurry seal work, the Contractor shall remove all pavement markers, striping and markings by grinding and also shall remove all loose dirt, oil, and oil spills on the pavement surface. Payment of this clean up shall be included in various bid items and no additional compensation will be allowed. No slurry work shall commence unless the removal method, either by grinding or some other approved means of removal of loose dirt, oil and oil spills are coordinated and approved by the Engineer.
   b. Weeds and Vegetation shall be sprayed with weed killer and removed at least seven (7) days prior to slurry seal.
   c. Slurry seal shall not be placed if either pavement or air temperature is below 60F, or when in the opinion of the Engineer, road conditions or imminence of inclement weather are not conductive to successful results.
   d. Slurry Seal placement shall not begin before 8:30 a.m. and shall be terminated each day in sufficient time for all streets to open to vehicular traffic by 4:00 p.m.

e. The surface to be slurried shall be lightly pre-dampened with fog spray water from the applicator mounted on the mixer spreader equipment. The rate of application shall be adjusted to compensate for ambient temperature and surface texture, and shall cover the entire surface without flowing or ponding.
f. The slurry seal mixture shall be of desired consistency upon placement. No lumping, balling, or unmixed aggregate shall be permitted. Sufficient amount of material shall be carried on the spreader at all times to obtain complete coverage. Overloading of the spreader shall be avoided at all times.
g. The slurry seal mixture shall be of desired stability for premature material breaking to occur in the spreader box. The mixture shall be homogeneous during and following mixing and spreading, and shall be free of excess water, emulsion and free of segregation of the emulsion and aggregate fines from the courser aggregates. Spraying of additional water into the spreader box shall not be permitted.
h. No streaks, such as those caused by oversize aggregates, shall be left in the finished surface. If excess oversize aggregate develops, the job shall be stopped until the Contractor corrects the work the satisfaction of the Engineer.
i. The slurry seal machine shall move forward at such speed that the slurry seal mixture penetrates and substantially fills surface voids on the existing penetrates and substantially fills all surface voids on the existing pavement. The forward speed of the slurry seal spreader shall be maintained to prevent corrugations and surface irregularities in the slurry seal. Under no circumstances shall the speed of the slurry seal machine exceed 200 feet per minute. Square footage of unacceptable slurry seal surfacing shall be deducted at unit price or the equivalent dollar specified in these Technical Specifications whichever is higher.
j. Slurry Seal shall be placed at locations shown on drawings, as marked in the field, and as directed by the Engineer. Slurry Seal material shall be extended to provide a minimum overlap beyond the edges of recently resurfaced streets, as marked in the field, or as directed by the Engineer. The edges of the slurry seal application on both sides of the street shall be maintained in a neat and uniform line. Along concrete gutters, the slurry seal overlap the lip of the gutter approximately 0.5 inch maximum to seal the joint along the edge of concrete. No run-off on the gutter shall be permitted. Where there is no concrete gutter, the slurry seal shall extend to the limits of existing pavement.
k. Areas not reached with slurry seal machines shall be surfaced using hand squeegees to provided uniform surface coverage. The areas needing hand work shall be lightly dampened prior to mix placement and the slurry worked immediately. Care shall be exercised to leave no slightly appearance from hand work. The same type of finish as applied by the spreader box shall be required. Hand work shall be completed during the machine application process.
l. The Contractor shall use 15 pound roofing paper at slurry seal transverse limits and at the stop/ start butt joints conforms to maintain neat and uniform line thickness of slurry seal placement. The Contractor shall position the paper to provide a minimum overlap at conforms, avoids double placement of materials at start/stop butt joints, and hold excess slurry for easy removal without spillage. Longitudinal lap joints shall coincide with lane lines or in the center of the roadway surface. Joints shall not be allowed at normal wheel track of vehicles or wheel paths. Care shall be taken to avoid leaving ridges at the lap joints between adjoining passes.
m. <u>All slurried streets shall be rolled using pneumatic-tired rollers</u> weighing at least 5 tons. Two (2) pneumatic tired rollers shall be on site at all times. Rolling should not commence until the slurry has cured enough so that it will not pick up on the tires of the roller. Pneumatic tired rollers shall be used as soon as slurry has cured the same day as placed. At no time will the rolling take place the following day or days.

n. The Contractor shall not continue to the next street until all hand work is completed and all excess slurry materials along gutters, walks and driveways are removed to the satisfaction of the Engineer. All excess and unsuitable materials within the right-of-way shall be removed each work day. Use of diesel solvents or solvents of any kind for cleaning tools and equipment shall not be allowed. The Contractor shall be responsible for all damages to the slurry seal coat until curing period is completed. All damaged areas shall be patched or re-slurried as directed by the Engineer.
o. The Contractor shall not schedule slurry seal more than 20,000 square yards per day with one crew.

8. Sweeping. The Contractor shall perform additional sweeping to remove excess loose material as follows:

   a. The Contractor shall coordinate and notify the Engineer of the proposed sweeping schedule. Upon direction of the Engineer, the Contractor shall adjust the said sweeping schedule should unforeseen circumstances arise or when the Engineer deems sweeping is needed to be performed.
   b. Within four (4) calendar days after slurry seal has cured, the Contractor shall perform the initial sweeping operation on all slurry seal areas/streets to remove excess and loose materials.

   c. Within ten (10) calendar days after slurry seal has cured, the Contractor shall perform the second sweeping operation. In areas where raveling has occurred, the Contractor shall correct said areas as directed by the Engineer. The Contractor shall perform additional sweeping operations after the second sweeping operation as determined necessary by the Engineer, and shall perform the required additional sweeping operations within forty-eight (48) hours of the Engineer notification.

F. PROCEDURES

The Contractor shall perform the service in a safe, acceptable, workmanlike manner, and in accordance with the requirements of Section 37-3, “Slurry Seals and Micro-Surfacing”, of the Caltrans Standard Specifications.

1. Personnel shall be experienced, knowledgeable and capable in all aspects of performing the service. The same personnel that start the project shall remain on the project for the life of the contract.

2. The equipment shall be in good repair and serviceable to operate in a reliable and safe manner. It is anticipated that the Contractor will provide three slurry mixing/spreading units to maintain the City's schedule.

3. The Contractor shall place slurry seal to the beginning and ending limits (including the intersections) of the work as directed by the Engineer.

4. The Contractor shall be responsible for providing the street cleaning, "No Parking" posting, and traffic control.

5. The Contractor shall be responsible for all cleanup of the work areas and staging areas.

6. The Contractor shall be responsible for covering and uncovering all structure covers, such as: manholes, valve covers, and monument covers.

G. MEASUREMENT AND PAYMENT

Slurry Seal shall be measured on a square yard basis. Full compensation for furnishing all labor, materials, tools, equipment, and incidentals, and for doing all work involved in compliance with the Plans, Specifications and these Technical Specification, "Type II Slurry Seal," shall be included in the square yard price paid for "Slurry Seal" and no additional compensation will be allowed therefor.

SECTION TS-10 ASPHALT PAVEMENT OVERCOAT

A. GENERAL

The asphalt pavement overcoat shall consist of a cold applied composition of petroleum sealer mixed with sand conforming to the following requirements and applied after the bond coat has dried:

1. Asphaltic Emulsion. Shall be of the same quality, or better, as "OverKote" asphalt pavement manufactured by Reed & Graham, Inc., or equal, such that it conforms to the specifications for SS1h grade per Section 94, "Asphaltic Emulsions," of the Caltrans Standard Specifications, not be of the clay type, and conform to the following minimum specifications:

SPECIFICATIONS	**LIMITS**	**TEST METHODS**
Residue at 300-400° F	55-65	See Note 1*
Dehydration, 96 hrs. at 100° F	0.6 min.	
Solubility of Residue in C_2HCl_3	15-20	AASHTO T-45-46
Loss of ignition of insoluble residue, %	16 max.	ASTM D-6
Cone penetration at 77° F, dmm	400-700	ASTM D-217

*Note 1 – Method for determination of residue:
A 25 gram sample is placed in a tin lid not less than 5 inch in diameter and heated on an electric hot plate at a temperature between 300-400° F for approximately 15-20 minutes until the vapor changes from white to a bluish color and bubbling ceases.

Test on Emulsion	Method	Polymer Modified Rejuvenating Emulsion
Viscosity @77 (SFS)	ASTM D244	75 - 350
Residue, w%, min.	ASTM D244	67
pH	ASTM E70	2.0-5.0
Sieve, w%, max.	ASTM D244	0.1
Oil distillate, w%, max.	ASTM D244	0.5
Test on Residue[1]		
Viscosity @ 140°F, P, maximum.	ASTM D2170	2000
Penetration @ 39.2°F, minimum.	ASTM D5	40
Elastic Recovery on residue by distillation[1,2] , %, minimum.	AASHTO T59, T301	70
Test on Latex[3]:		
Tensile strength, die C dumbbell, psi, minimum	ASTM D412	500
Swelling in rejuvenating agent, % maximum; 48 hours exposure @ 104°F	ASTM D471[4] Modified	40% intact film
Test on rejuvenating agent:		
Flash point, COC , °F	ASTM D92	> 380
Hot Mix Recycling Agent Classification	ASTM D4552	See Section II

(1) Exception to AASHTO T59: Bring the temperature on the lower thermometer slowly to 350° F plus or minus 10° F. Maintain at this temperature for 20 minutes. Complete total distillation in 60 plus or minus 5 minutes from first application of heat.

(2) Elastic Recovery @ 10° C (50°F): Hour glass sides, pull 20 cm, hold 5 minutes then cut, let sit one (1) hour.

(3) Latex films shall be cured at 75°F and 50% relative humidity for fourteen (14) days prior to cutting or molding specimens. Suitable substrate for film formation shall be polyethylene boards, silicone rubber sheeting, glass, or any substrate which produces a cured film of uniform cross-section.

(4) Report mass increase as a percent by weight of the original latex film mass upon exposure of films to the recycling agent.

2. Sand. Sand for the overcoat mixture shall be No. 30 mesh blast sand composed of clean, hard, durable, uncoated particles, free from lumps of clay or organic matter. The use of crushed granite or other white or light gray-colored sand or aggregate shall not be allowed.

3. Water. Water shall be potable and free from harmful soluble salts.

B. PROPORTIONING

1. The bond coat shall consist of a tack coat mixture of one (1) part emulsified asphalt binder (SS1h grade) and four (4) parts water.

2. The asphalt pavement overcoat shall be proportioned, mixed, and applied in a manner that takes into account the surface roughness of the pavement. The proportions of materials and the number of applications required shall be in accordance with those contained in the mix design submittal and the manufacturer's specifications as approved by the Engineer.

C. MIXING

1. The mixing or agitating equipment utilized by the Contractor shall be a tank-type power mixer with a round bottom and shall be a power driven mixer of sufficient capacity to maintain the mineral content of the overcoat in suspension prior to application.

D. PLACING

1. No asphaltic emulsion products shall be placed when either the pavement or the air temperature is below 50°F, or when in the opinion of the Engineer, pavement conditions or imminence of inclement weather, are not conducive to successful results.

2. Placement shall not begin before 8:30 a.m. and shall be terminated each day in sufficient time for all streets to open to vehicular traffic by 4:00 p.m.

3. The Contractor shall remove all existing pavement markings, paint and thermoplastic, within the limits of the overcoat area as part of the pavement preparation process.

4. The Contractor shall protect all buildings, fences, utility boxes, storm drain grates, and adjacent concrete curbs, gutters, and sidewalks from overspray, spillage, and tracking during application of the bond coat and overcoats.

5. The Contractor shall apply the bond coat over the entire asphalt pavement to be overcoated at a rate of 0.05 to 0.10 gallon per square yard. The bond coat shall be allowed to dry prior to placement of the overcoat. Any pools of wet binder remaining in depressions shall be swept out and allowed to dry before applying the overcoat.

6. Prior to the first application of overcoat in hot weather, the Contractor shall dampen the pavement surface. Any excess water shall be removed to leave the surface only slightly damp prior to application.

7. In general, for the purposes of bidding the project, two (2) or more applications of overcoat mixture are required for the surface roughness with three (3) pounds of 30 mesh sand and adequate water added per gallon of sealer (not to exceed 15% by volume) to the first application to obtain a semi-fluid consistency, and another application of sealer made without the application of sand as necessary to obtain a smooth and uniform surface. The quantity of undiluted sealer to be applied per 1,000 square feet of area shall also be determined in the mix design submittal, but is estimated at a minimum of 30 gallons per 1,000 square feet of area for the purposes of the bid. In the field, the controlling factor shall not be the quantity of sealer used, but that the finished surface shall be smooth and uniform, showing no evidence of course or uneven texture.

8. The asphalt pavement overcoat shall be applied by the combined use of rubber-faced squeegees and mechanized material spreading equipment or other suitable methods approved by the Engineer. The material should be applied to the area in continuous parallel lines and spread immediately by the use of rubber-faced squeegees and/or mechanized materials spreading equipment. Care shall be taken to avoid leaving ridges at the lap joints between adjoining passes.

9. Asphalt pavement overcoat material shall be placed to the limits as indicated on the plans and as directed by the Engineer. Where curbs and sidewalks exist, the overcoat shall seal the joint between the edge of pavement and the concrete, but shall not overlap onto the concrete. The Contractor shall use 15 pound roofing paper to start and stop at sidewalks, in order to ensure a straight line conform and hold excess material for easy removal. The edge limits of the overcoat application shall extend to the existing edges of pavement.

10. All excess and unsuitable materials resulting from the Contractor's operations shall be removed as it develops by the end of each work day.

11. The Contractor shall not use diesel fuel or solvents of any kind for cleaning tools and equipment in such a manner as to permit spillage of the diesel fuel or solvent.

12. The Contractor shall be responsible for all damage to the overcoat until it cures. All damaged areas shall be re-coated as directed by the Engineer at the Contractor's expense.

13. After the pavement overcoat has cured, and during the duration of the contract, the Contractor shall perform additional sweeping in areas of excess raveling, as directed by the Engineer.

E. MEASUREMENT AND PAYMENT

Asphalt Pavement Overcoat shall be measured on a square yard basis. Full compensation for furnishing all labor, materials, tools, equipment, and incidentals, and for doing all work involved in compliance with the Plans, Specifications and this Technical Specification, "Asphalt

Pavement Overcoat", shall be included in the square yard price paid and no additional compensation will be allowed therefor.

SECTION TS-11 TRAFFIC STRIPES AND PAVEMENT MARKINGS (THERMOPLASTIC)

A. GENERAL

Traffic stripes and pavement legends including crosswalks shall be placed as shown on the plans, as specified in Section 84, "Traffic Stripes and Pavement Markings," and Section 85, "Pavement Markers," of the Caltrans Standard Specifications as modified herein, and as directed by the Engineer.

Permanent striping and pavement markings shall be thermoplastic.

The Contractor shall coordinate with the Engineer prior to the restriping of any street.

Configuration of traffic stripes, pavement markings and crosswalks shall conform to the detail and methods as set forth in the latest issue of the State of California, Department of Transportation Traffic Manual unless specifically modified on the plans.

Contractor shall place control points spaced at 200 feet on tangents and 50 feet' on curves for Engineer to review and approve. No additional "cat tracks" shall be placed until control points are approved by the Engineer.

The Contractor shall make all necessary conform striping as required. Stripes shall be sharp and clear. The Contractor shall remove by sandblasting or grinding any and all striping that conflicts with new pavement markers or new striping. All sand and paint residue from sandblasting operations shall be removed from the pavement during the same work-shift the sand blasting occurred.

Section 84-2.02, "Materials," of the Caltrans Standard Specifications is deleted.

Caltrans Standard Specifications for thermoplastic material and glass beads may be obtained from the Transportation Laboratory, P.O. Box 19128, Sacramento, California 95819, (916) 739-2400.

Thermoplastic material for traffic stripes shall be applied at a minimum thickness of 0.07 inch.

The Contractor shall place and remove any temporary striping required for routing traffic through the project area.

Surfaces which are to receive striping shall be thoroughly cleaned, free from loose materials and dry, and such areas shall be thus prepared by the Contractor to the satisfaction of the Engineer.

The completed stripes and markings shall have clean and well defined edges and their maximum deviations from the designated positions of the stripes shall not exceed one and one-half inch (1 1/2") in any 100 feet length of stripe, including gaps.

Any damage to the newly placed stripe or marking due to the failure of any Contractor to protect his work, shall be repaired by him at no additional cost.

B. MEASUREMENT AND PAYMENT

Thermoplastic Traffic Stripes shall be measured on a lineal foot basis per entire length of detail as shown on the plans and placed in the field. Measurement includes footage from start to end of said detail irrespective of spacing of striping material (including pavement markers) and associated gaps in between. For stripes requiring multiple lines, the composite section will count as a lineal foot of striping for payment, not the total length of the individual component lines. Pavement markers associated with striping shall not be measured separately.

Full compensation for furnishing traffic control for all operations involved in removing existing and placing new traffic stripes and pavement markings shall be included in the lump sum price paid for, “Traffic Control and Construction Area Signs” and no additional compensation will be allowed therefor.

Full compensation for furnishing all labor, materials, tools, equipment, and incidentals, and for doing all work involved in compliance with the Plans, Specifications and this Technical Specification for Thermoplastic Pavement Markings, Thermoplastic Traffic Stripes, and Curb Paint, including but not limited to associated markers and layout work, shall be included in the lineal foot price paid for the associated striping as shown on the plans and on the project bid schedule, and “[Width] Inch-Wide Stripe (Thermoplastic)” and no additional compensation will be allowed therefor.

Thermoplastic Pavement Markings shall be measured on a square foot basis, irrespective of thermoplastic material coverage within the area measured.

Full compensation for furnishing all labor, materials, tools, equipment, and incidentals, and for doing all work involved in compliance with the Plans, Specifications and this Technical Specification for Thermoplastic Pavement Markings, including but not limited to any layout work, shall be included in the square foot prices paid for “Pavement Marking (Thermoplastic)” bid items and no additional compensation will be allowed therefor.

SECTION TS-12 PAVEMENT MARKERS

A. GENERAL

Pavement markers shall conform to the provisions in Section 85, "Pavement Markers," of the Caltrans Standard Specifications and these Technical Specifications.

At the option of the Contractor, a hot melt bitumen adhesive may be used to cement the markers to the pavement, instead of the Rapid Set Type or Standard Set Type adhesive specified in Section 85-1.02E “Epoxy Adhesive”, of the Caltrans Standard Specifications. The bitumen adhesive material, if used, shall conform to the following:

Flash Point, COC, °F	D92	550 Min.
Softening Point, °F	D36	200 Min.
Brookfield Viscosity, 400°F	D2196	7,500 CP, Max.
Penetration, 100g, 5 sec.	D5	10-20 dmm 70°F
Filler content, % by weight (insoluble in 1,1,1, Trichloromethane)	D2371	50-75

Filler material shall be calcium carbonate and shall conform to the following fineness:

Sieve Size	Percent Passing
No. 100	100
No. 200	95
No. 325	75

Bitumen adhesive shall be indirectly heated in an applicator with continuous agitation. The adhesive shall be applied at a temperature between 400°F and 425°F. Markers shall be placed immediately after application of the adhesive.

Replacement of markers using bitumen adhesive shall conform to the requirements for placing markers in Section 85-1.03 “Construction” of the Caltrans Standard Specifications, except as follows:

1. Markers shall not be placed when the pavement or air temperature is 50°F or less.
2. Blast cleaning of clean, new asphalt concrete surfaces will not be required.

Blue fire hydrant markers shall be placed in the street perpendicular to the fire hydrant. Markers shall be blue with two reflective faces.

B. MEASUREMENT AND PAYMENT

Blue Fire Hydrant Markers shall be measured per each marker placed in the field.

Full compensation for furnishing traffic control for all operations involved in placing new pavement markers shall be included in the lump sum price paid for “Traffic Control and Construction Area Signs” and no additional compensation will be allowed therefor.

Full compensation for furnishing all labor, materials, tools, equipment, and incidentals, and for doing all work involved in compliance with the Plans, Specifications and this Technical Specification for Pavement Markers not associated with pavement striping except as noted herein shall be included in the per each price paid for “Blue Fire Hydrant Marker” and no additional compensation will be allowed therefor.

Pavement Markers associated with striping shall not be measured separately.

Full compensation for furnishing all labor, materials, tools, equipment, and incidentals, and for doing all work involved in compliance with the Plans, Specifications and this Technical Specification for Pavement Markers associated with pavement striping shall be considered as included in the contract price paid for the appropriate striping detail bid item and no additional compensation will be allowed therefor.

SECTION TS-13 CLEAN-UP

A. GENERAL

Following completion of the work the Contractor shall remove from the premises and work areas, all excess materials, tools and equipment used in the execution of the work and shall dispose of all debris resulting from the work.

B. MEASUREMENT AND PAYMENT

Full compensation for furnishing all labor, materials, tools, equipment, and incidentals, and for doing all work in compliance with the Plans, Specifications and this Technical Specification for "Clean-Up" shall be considered as included in the contract unit prices paid for various items of work and no additional compensation will be allowed therefor.

SECTION TS-14 COLD PLANE MILLING

A. GENERAL

Existing asphalt concrete shall be planed at the locations and to the depths and dimensions shown on the plans and in accordance with Section 42-2, "Grinding," of the Caltrans Standard Specifications and these Technical Specifications.

B. EQUIPMENT

Cold planing shall be performed utilizing machines equipped with a cutter head no less than 72 inches in width. The cold planing machine shall be operated so as not to produce fumes or smoke. The cold planing machine shall be capable of planing the pavement without requiring the use of a heating device to soften the pavement during or prior to the planing operation.

C. PROCEDURES

Planing asphalt concrete shall be performed by the cold planing method. Planing of the asphalt concrete pavement shall not be done by the heater planing method.

The depth, width and shape of the cut shall be as marked in the field, indicated on the plans or as directed by the Engineer. The final cut shall result in a uniform surface. The outside lines of the planed area shall be neat and uniform. Planing asphalt concrete pavement shall be performed without damage to the surfacing to remain in place.

Any sections of asphalt that become loose after grinding shall be removed and disposed of by the Contractor at the Contractor's expense. If grinding operations begins to pulverize the asphalt concrete to remain the Contractor shall notify the Engineer immediately. In locations where the grinding operation begins to pulverize the remaining asphalt concrete, the Contractor shall use a smaller grinder to prevent asphalt concrete damage. Depending on the depth of the milling or grinding operations, subgrade may be encountered.

The material planed from the roadway surface, including material deposited in existing gutters, driveways, around structures, or on the adjacent traveled way, shall be removed and hauled away. Removal operations of cold-planed material shall be concurrent with planing operations and follow within 50 feet of the planer, unless otherwise directed by the Engineer.

The Contractor shall furnish and operate a self-loading motor sweeper with spray nozzles for final clean-up work and shall keep the milled area cleaned and maintained at all times until the street has been resurfaced.

The Contractor is notified that existing pavement fabric may be encountered in the areas to be ground. If pavement fabric substantially hinders the progress of grinding as determined by the

Engineer, the Contractor will be given additional contract days to accomplish grinding operations. No additional compensation beyond the unit price bid for Pavement Grinding will be made to the Contractor based on the presence of fabric in the sections to be ground or the presence of existing asphalt above the lip of gutter.

D. MEASUREMENT AND PAYMENT

Full compensation for furnishing all labor, materials, tools, equipment, and incidentals, and for doing all work involved in compliance with the Plans, Specifications and this Technical Specification for Cold Plane Milling of AC shall be included in the price paid for "2 or 4 Inch Grind and Overlay" and no additional compensation will be allowed therefor.

SECTION TS-15 GRIND AND OVERLAY

A. GENERAL

This work shall consist of the removal and replacement of existing pavement materials in areas marked in the field and/or described in the plans, and/or as directed by the Engineer.

B. MATERIALS

Asphalt concrete and binder shall conform to Section TS-17 "Asphalt Concrete Pavement" of these Technical Specifications.

C. PROCEDURES

1. Prior to beginning any work on the dig outs, the Contractor shall arrange for and conduct a field review of each grind and overlay with the Engineer. The Engineer and Contractor shall record the agreed upon dimensions for each repair at each location. Size of the grind and overlay shall not vary from this agreement unless specified in writing by the Engineer. Additional compensation shall not be allowed for grind and overlays in excess of the agreed upon size.

    a. Grind and overalys shall be performed before any required surface milling. The Contractor shall remove existing asphalt concrete pavement at areas shown on the plan and agreed upon by the Engineer by sawcutting or by grinding to a minimum depth as indicated below existing grade or proposed grinding plan on areas to be ground. Overcutting at the ends of sawcuts shall not be allowed.

    b. Upon removing all existing material to the required depth, all loose material shall be removed to a solid surface (95% Relative Compaction) or the Contractor shall compact the upper 12 inches of the subgrade (or aggregate base) to not less than 95% relative compaction. Any import basement material needed to meet the requirement for this work shall be provided by the Contractor to the site and compacted to 95% relative compaction by the Contractor at no additional expense to the City.

2. The Contractor shall replace the void with asphalt concrete as specified in the "Materials" section. Asphalt concrete shall be placed in lifts with thickness no less than 1.5 inches and no greater than 3 inches. The asphalt concrete shall be placed and compacted to 95% density and shall meet the elevation of the existing pavement contour. Areas inaccessible to rollers shall be compacted by use of a power compactor of the high impact, vibra plate type, capable of attaining the same compaction as the rolled areas. Relative compaction

will be determined by California Test 375. Laboratory specimens will be compacted in conformance with California Test 304. Asphalt concrete shall be placed only when the atmospheric temperature is a minimum of 50°F and rising.

a. Prior to the placement of the asphalt concrete, the Contractor shall apply a tack coat to the horizontal and vertical faces of the existing asphalt pavement.

b. The Contractor shall not excavate any more area of existing asphalt pavement than can be completed by the end of the workday. All excavations shall be backfilled with the final asphalt section by the end of each working day.

D. MEASUREMENT AND PAYMENT

Grind and Overlay shall be measured on a square foot basis per the actual surface area repaired.

Full compensation for furnishing all labor, materials, tools, equipment, and incidentals, and for doing all work involved in compliance with the Plans, Specifications and this specification for Grind and Overlay, including but not limited to removal of existing asphalt, sawcutting, grinding, furnishing and applying tack coat, compaction of subgrade or aggregate base, and furnishing and placing of asphalt concrete, shall be included in the square foot price paid for “2 or 4 Inch Grind and Overlay” and no additional compensation will be allowed therefor.

SECTION TS-16 ASPHALT CONCRETE PAVEMENT

A. GENERAL

All asphalt concrete used for this project shall be Type A conforming to the provisions in Section 39 "Asphalt Concrete" with 15% Reclaimed Asphalt Pavement (“RAP”) of the Caltrans Standard Specifications and these Technical Specifications.

MATERIALS

B. ASPHALT BINDER

Bituminous binder shall be steam refined paving asphalt PG 64-10 conforming to the provisions in Section 92 "Asphalt Binders" of the Caltrans Standard Specifications and these Technical Specifications.

C. AGGREGATE GRADING

Asphalt concrete shall be produced at a central mixing plant. For pavement dig outs, and overlays greater than 2 inches, aggregate shall conform to 0.5 inch maximum, medium grading and for less than 2 inch overlays, leveling courses, and top courses aggregate shall conform to 0.5 inch maximum grading in accordance with Section 39-2.02B(4) “Aggregates” of the Caltrans Standard Specifications.

D. MIX DESIGN

MIX DESIGN TOLERANCES

Test	Individual Test Results	Test Method No. Calif.
Loss in L.A. Rattler (after 500 rev.)	45% Max	211
Kc and Kf	1.8 Max	303
Sand Equivalent	45 Min	217
Stabilometer Value 3/4"	35 Min	304
1/2"	35 Min	304
3/8"	30 Min	304
Moisture Vapor Susceptibility	25 Min	307
Swell	0.030" Max	305
Lab Compacted Density		304
Maximum Specific Gravity		ASTM D-2041
Air Voids Content %	3 Min - 4.5 Max	

Certificates of Compliance, in accordance with Section 6-2.03C, "Certificates of Compliance" of the Caltrans Standard Specifications, shall be required from the supplier of the asphalt concrete and delivered to the Engineer not less than ten (10) working days prior to any scheduled asphalt concrete paving.

Asphalt concrete shall be compacted to a relative density of 96.5% of the laboratory compacted unit weight (Cal TM 304). Tests will be run at random locations to verify compaction. No single test shall be less than 95%. Compaction of the mix will be determined by use of a nuclear density gauge and cores. Areas not passing the specified compaction will be reworked until proper compaction is achieved.

E. TACK COAT

Tack coat shall be asphalt emulsion grade SS-1 furnished and applied in conformance with the provisions in the City Standard Plans and Specifications for Section 39-2.01C(3)(f) "Tack Coat", and Section 94 "Asphaltic Emulsions" of the Caltrans Standard Specifications, and these Technical Specifications, and shall be applied to all surfaces of concrete gutter and to existing roadway surfacing that will come into contact with asphalt concrete.

The area to which tack coat has been applied shall be closed to public traffic. Care shall be taken to avoid tracking binder material onto existing pavement surfaces beyond the limits of construction. The surface shall be free of water, foreign material, or dust, when tack coat is applied.

F. SPREADING AND COMPACTING

The Contractor shall not perform paving operations when the weather is rainy or foggy. Determination of inclement weather shall be made by the Engineer. If the day's operations are canceled because of fog or rain, a non-working day will be allowed only as specified under section 1-1.07, "Definitions," of Caltrans Standard Specifications.

Contractor shall receive the approval of the Engineer before placing any asphalt concrete on the roadway. Asphalt concrete shall not be placed on any surface which contains ponded water or excessive moisture nor in any unapproved location, as determined by the Engineer.

If paving operations are in progress and rain or fog forces a shut down, loaded trucks shall return to the plant and no compensation will be allowed therefor. The Contractor shall furnish and use canvas tarpaulins to cover all loads of asphalt concrete from the time that the mixture is loaded until it is discharged from the delivery vehicle, unless otherwise directed in writing by the Engineer.

No traffic shall be allowed on the asphalt emulsion with the exception of vehicles unloading asphalt concrete. All vehicles involved with the Contractor's operations shall turn around within the road right- of-way. Driveways and other private property shall not be used without prior written consent of the involved property owner, a dated copy of which shall be delivered to the Engineer prior to the use thereof.

The area to which tack coat has been applied shall be closed to public traffic. Care shall be taken to avoid tracking tack coat material onto existing pavement surfaces beyond the limits of construction.

Longitudinal and transverse conforms between existing pavement and newly constructed pavement shall be made by cutting the existing pavement to a neat, smooth line at the conform line and constructing a vertical-face butt joint.

A drop-off of more than 0.15 foot will not be allowed at any time adjacent to traveled lanes of asphalt concrete surfacing.

G. THICKNESS AT LIP OF GUTTER

Asphalt concrete placed adjacent to any fall-away gutter shall be placed flush with the lip of gutter. Asphalt concrete placed adjacent to any gutter designed to carry water shall be 0 inches to 0.25 inch above the gutter lip after final compaction, but in no case shall it be more than 0.25 inch. Any areas greater than 0.25 inch shall be repaired by wedge grinding a minimum depth of 1 inch and repaving as directed by the Engineer. Asphalt concrete placed adjacent to any gutter designed to shed water shall be flush with the gutter lip after final compaction.

H. MEASUREMENT AND PAYMENT

Full compensation for furnishing all labor, materials, tools, equipment, and incidentals, and for doing all work involved in asphalt concrete overlay in the project in compliance with the Plans and Specifications, including but not limited to temporary delineation, shall be included in the price paid for “2 or 4 Inch Grind and Overlay” and no additional compensation will be allowed therefor.

SECTION TS-17 ADJUST EXISTING FACILITIES TO GRADE

A. MEASUREMENT AND PAYMENT

Frames and covers and frames and grates of existing manholes, monuments, water valves, anodes, hand-holes, air release valves, and PG&E valves, or other facilities shall be lowered to accommodate the grinding operation and raised back up to finished grade after the surface

layer of asphalt is placed at locations indicated on the plans in accordance with the provisions in Section 15 “Existing Facilities and Section 71-5.013B “Frames, Covers, Grates, and Manholes” of the Caltrans Standard Specifications except that no metal riser adjustment rings will be permitted.

Frames and covers shall be removed, transported and stored without damage. Any items damaged shall be replaced at the Contractor’s expense. Pre-existing damage must be brought to the Engineer’s attention prior to commencement of any work. The covers shall be adjusted by excavating the frame and cover in a neat line with a dimension not greater than necessary to loosen and adjust the frame with the cover and the concrete collar.

Adjustments shall be accomplished by removing the existing concrete collar around the frame, installing concrete adjusting rings when needed (or other as needed for water meters, if applicable), adjusting the frame and cover, and constructing a new concrete collar. The concrete collar shall be constructed so that the top of the collar is no greater than two inches and no less than one inch below the existing pavement grade surrounding the facility. The void between the top of the concrete collar and the finish grade of the pavement around the collar shall be paved to finish grade with asphalt concrete, or portland cement concrete as specified on the plans. Paving operations shall be as specified in the Asphalt Concrete, or Concrete Curb Ramp Section(s) of these Technical Specifications.

All existing valve and monument boxes shall be removed and replaced at the time of construction. Water valves must be accessible immediately after grinding and water valve covers must be lowered within 48 hours before grinding. All structures to be adjusted must be lowered within 48 hours before grinding. All structures raised to grade must be paved within 48 hours or the Contractor will be required to furnish temporary paving.

Non-City utility manholes and other structures will be adjusted by others unless agreed by City.

Contractor shall contact and coordinate with the following utility company representatives, and others as necessary:

AT&T	Gregory Greenwood	(925) 548-4658
Pacific Gas & Electric	Barry Carangenlo	(925) 779-7759
Comcast Cable	Ryan Lawrie	(925) 349-3481

Removal and replacement of existing utility frame and cover where indicated on plans shall be per City Standard Details.

B. MEASUREMENT AND PAYMENT

Adjusting Existing Facilities to Grade (Manhole, Water Valve, Anode, PG&E Valve, Cleanout, Handhole) shall be measured per each facility adjusted as measured in field.

Full compensation for furnishing all labor, materials, tools, equipment, and incidentals, and for doing all work involved in compliance with the Plans, Specifications and this Technical Specification Section, “Adjust Existing Facilities to Grade” shall be included in the per each price paid for “Adjust Facility to Grade,” and no additional compensation will be allowed therefor.

SECTION TS-18 TRAFFIC SIGNAL DETECTOR LOOPS

A. GENERAL

Signal detector loops shall be removed and/or replaced as shown on the plans and as directed by the Engineer. Loop type is indicated on the plans.

Contractor must contact Contra Costa County Traffic Signal Maintenance, John Abraham at (925) 313-7054, prior to removal of any loops.

Detectors shall conform to Section 86-5.01, “Vehicle Detectors” of the State Standard Specifications and these Technical Specifications. Loop wire shall be Type 2 #12 stranded THWN conductor inside polyethylene tube. Loop lead-in cable shall be Type B. The loop conductor connection shall be soldered. The number of lead-in cables required to achieve the specified detection shall be installed.

Residue resulting from slot cutting operation shall not be permitted to flow across shoulders or lanes occupied by public traffic and shall be removed from the pavement surface.

Each cable shall be identified in the pull-box nearest the loop and in the controller cabinet as to its "phase and loop number." Detector lead-in cables shall be tagged at the terminal board in the controller cabinet and shall conform to Section 86-5.01, "Vehicle Detectors" details.

Conductors to be buried in the pavement shall be installed only in the presence of the Engineer. All loops in a single lane shall be of the same type per location, unless otherwise noted on the Plans where the loop is closest to the crosswalk. Where one traffic signal detector consists of a sequence of 4 loops in a single lane, the front loop closest to the limit line or crosswalk shall be located 0.3 m from the line. All loops shall be connected in series.

Loop detector lead in cable shall be run continuously without splice from the detector termination pullbox to the field terminals in the controller cabinet.

Hot melt asphaltic loop filler shall be used to install all loops in existing pavement, and in the final lift in new asphalt when not installed in the next to last lift. The Asphaltic Emulsion Sealant shall be “Overcoat Loop Filler,” or approved equivalent, shall be used to install the detector loops prior to installing the final lift of asphalt. Epoxy shall be used in concrete surfaces. Asphalt concrete shall be used to fill all curb termination points.

The Contractor shall test the detectors with a motor driven cycle, as defined in the California Vehicle Code, that is licensed for street use by the DMV of the State of California. The Contractor shall provide a detection area of the detector at not less than three miles per hour, or not more than seven miles per hour with an operator driven motor vehicle. The vehicle shall not exceed 220 pounds and the engine displacement shall not exceed 100 cubic centimeters.

B. MATERIALS

Sensor units shall be Detector Systems Digital Loop Model 10, or City-approved equal. The Contractor shall identify loop wires by lane number, loop number, and start/finish using tie wraps and permanent marker.

Loops shall be installed as per Standard Plan ES – 5B and shall conform to the following:

1. Conduit:

   Conduit which is installed underground shall be Type 3, rigid, nonmetallic type, Schedule 40. All conduits shall enter a pullbox with a 90-degree elbow, unless permitted otherwise by the Engineer.

   All conduits shall have a 1/4 inch pullrope installed in them.

   After conductors have been installed, the ends of the conduits terminating in pull boxes and controller cabinets shall be sealed with a sealing compound approved by the Engineer.

   When a standard coupling cannot be used for coupling metal type conduit, a UL listed threaded union coupling, as specified in Section 86-2.05C, “Installation,” of the Caltrans Standard Specifications, or a concrete tight split coupling or concrete tight set screw coupling shall be used.

2. Loop Detectors:

   At the Contractor’s option, where Type A loop is designated on the Plans, a Type E loop may be substituted.

   For Type E detector loops, sides of the slot shall be vertical and the minimum radius of the slot entering and leaving the circular part of the loop shall be 1.5 inch. Slot width shall be a maximum of 0.75 inch. Loop wire for circular loops shall be Type 2. Slots of circular loops shall be filled with elastomeric sealant or hot melt rubberized asphalt sealant.

   The depth of loop sealant above the top of the uppermost loop wire in the sawed slots shall be 2 inch, minimum.

3. Bike Loops:

   Type D detector loop is designated for bike loops.

C. MEASUREMENT AND PAYMENT

Replacement of Detector Loops and Detector Loop Circuits shall be measured per each detector loop installed as measured in field, regardless of the quantity of detector loops removed.

Full compensation for furnishing all labor, materials, tools, equipment, and incidentals, and for doing all work involved in removing and replacement of detector loops compliance with the Plans, Specifications and this Technical Specification Section, “Traffic Signal Detector Loops” shall be included in the price paid per each “Traffic Signal Detector Loops” and no additional compensation will be allowed therefor. Any damage to existing detector loops outside the limits of work due to the failure of any Contractor to protect these facilities shall be repaired by him at no additional cost.

SECTION TS-19 CONCRETE CURB RAMP OR HANDICAP RAMP

A. GENERAL

This section shall include work associated with curb ramp reconstruction and shall conform to the requirements of Section 90 “Concrete” of the Caltrans Standard Specifications, Section 90 of the City’s Engineering Standard Specifications, these Technical Specifications and as directed by the Engineer. Attention is directed to Section 15, “Existing Facilities” of the Caltrans Standard Specifications for existing facilities requiring adjustment to grade, removal, and/or resetting as a result of curb ramp reconstruction work.

B. MATERIALS

Materials for concrete work shall conform to Section 90 “Concrete” of the Caltrans Standard Specifications, and as modified by the City’s Standard Specifications to include Fibrous Concrete Reinforcement to all concrete mixes.

When required, asphalt concrete (AC), used in connection with curb ramp reconstruction, shall be Type A and shall be produced at a central mixing plant. Grade of asphalt binder for AC Type A shall be PG 64-16. The aggregate for AC Type A must comply with the 3/4 inch grading for asphalt concrete replacement in front of curb ramps.

C. PROCEDURES

Portland Cement Concrete (PCC) Curb Ramp shall conform to Section 73-3, "Sidewalk, Gutter Depression, Island Paving, Curb Ramp and Driveway Construction” of the Caltrans Standard Specifications, Section 90 “Concrete” of the Caltrans <u>and</u> City Standard Specifications, these specifications, and as directed by the Engineer. Curb Ramps shall conform to City Standard Plan ST-21 and as detailed on the plans. Utility owners will relocate their existing utility facilities, if any, prior to start of construction. Curb ramp shall be adjusted by the Engineer to fit field conditions.

The Engineer may remove locations or specify additional locations within, adjacent, or near the project limits. Additional locations shall be paid for at the bid price of the appropriate bid items and no additional compensation will be allowed therefor.

The new back of curb ramp shall match existing concrete walkways within one-quarter inch (1/4") without adjusting the cross section. Controls joints and scoring shall match adjacent existing sidewalk or shall be as directed by the Engineer. Boundaries of curb ramp removed shall be sawcut unless directed otherwise by the Engineer.

New curb ramp shall be sprayed uniformly with a clear curing compound. The material, method, and rate of application shall conform to Section 90-1.03B(3), "Curing Compound Method," of the Caltrans Standard Specifications except that only non-pigmented curing compounds conforming to the requirements of ASTM Designation: C 309, Type 1, Class B, or of AASHTO Designation: M 148, Type 1-D, shall be used.

All new Portland Cement Concrete (PCC) improvements shall be doweled to existing PCC improvements as directed by the Engineer using twelve inch (12") long No. 3 rebar. Generally, dowels shall be placed three feet (3') on center longitudinally when adjacent to existing PCC improvements with a minimum of two (2) equally spaced dowels. Two (2) equally spaced

dowels shall be placed at each conform to existing PCC sidewalk or curb ramp and at each full width expansion joint. Dowels shall be drilled for tight fit and epoxied in place.

Landscaping, yard drain pipes, and sprinkler heads and lines located near the existing back of sidewalk or sidewalk ramp shall be protected from damage. Sewer cleanouts located near the existing back of sidewalk or curb ramp shall also be protected from damage and remain free of debris. Any damage shall be repaired at the Contractor's expense to the satisfaction of the Engineer.

A minimum of 4 inches of Class 2 aggregate base shall be placed under accessible curb ramps and shall conform to the requirements specified elsewhere in these Technical Specifications.

All replaced curb ramps shall have detectable warning surface. The detectable warning surface, or truncated domes, shall conform to the requirements of these specifications and the details provide in the City Standard Plan St-21. The cost for placement of detectable warning surface shall be included in the unit price for each Curb Ramp and no additional compensation will be made therefor.

Curb ramp detectable warning surface shall consist of raised truncated domes constructed or installed on curb ramps in conformance with the details shown on the plans and these Technical Specifications. The detectable warning surface shall be prefabricated modules designed to be inserted in wet concrete, or surface mounted detectable warning surfaces as indicated on the plans. The color of the detectable warning surface shall be dark gray per the City Standard Drawings.

Prefabricated detectable warning surface shall be in conformance with the requirements established by the Department of General Services, Division of State Architect and be attached in conformance with the manufacturer's recommendations.

The finished surfaces of the detectable warning surface shall be free from blemishes.

Prior to constructing the prefabricated module, the Contractor shall demonstrate the ability to produce a detectable warning surface conforming to the details shown on the plans and these Technical Specifications by constructing a 24-inch by 24-inch test panel.

The manufacturer shall provide a written 5-year warranty for prefabricated detectable warning surfaces, guaranteeing replacement when there is defect in the dome shape, color fastness, sound-on-cane acoustic quality, resilience, or attachment. The warranty period shall begin upon acceptance of the contract.

When required, the Contractor shall replace the AC as specified in the “Materials” section. The thickness of this AC shall be minimum of 4 inches deep. AC shall be placed in lifts with thickness no less than 1.5 inches and no greater than 3 inches. The AC shall be placed and compacted to ninety five percent (95%) density and shall meet the elevation of the existing pavement contour and lip of gutter at ramp. Areas inaccessible to rollers shall be compacted by use of a power compactor of the high impact, vibra plate type, capable of attaining the same compaction as the rolled areas. Relative compaction will be determined by California Test 375. Laboratory specimens will be compacted in conformance with California Test 304. AC shall be placed only when the atmospheric temperature is a minimum of 50 degrees Fahrenheit and rising.

Prior to the placement of the AC, The Contractor shall apply a tack coat to the horizontal and vertical faces of the existing asphalt pavement.

The Contractor shall not excavate any more area of asphalt concrete replacement than can be completed by the end of the workday. All excavations shall be backfilled with the final asphalt section by the end of each working day.

Construction of curb ramp requires removal and replacement of some asphalt concrete, PCC sidewalk, curb and gutter as shown on the plans and as directed by the Engineer. PCC milling may also be required. Construction of retaining curbs may be required in some cases as shown on the plans and as directed by the Engineer. This work is to be paid for at the contract price paid for each Curb Ramp and no additional compensation will be made therefor.

D. SURFACE APPLIED TRUNCATED DOMES
(GLUE AND SCREW TYPE 3' X 4' TRUNCATED DOMES)

The Bid Item for Surface Applied Truncated Domes shall apply to locations where no curb ramp is to be installed or reconstructed and only truncated domes are to be installed for facilitation of the visually impaired. Truncated domes shall be installed on a 4" thick concrete surface with a 6" minimum apron around the truncated domes for visual contrast. Truncated domes shall be made of Armor-Tile surface mounted truncated domes, or approved equivalent. These truncated domes surfaces shall match the slopes of the surrounding pathway. These truncated domes shall be consistent with other truncated domes installed throughout the project. All requirements for installation of truncated domes on curb ramps and these Technical Specifications shall apply insofar as they apply.

E. MEASUREMENT AND PAYMENT

Reconstruction of curb ramps shall be measured and paid per each curb ramp to receive reconstruction. Unit of measurement per each shall include adjacent sidewalk and driveway areas reconstructed to match grade with, or damaged by reconstruction of, new curb ramps.

Full compensation for furnishing all labor, materials, tools, equipment, and incidentals, and for doing all work involved in removal and replacement of existing concrete sidewalk and/or curb ramp including but not limited to sawcutting, root cutting, excavation, subgrade preparation, removal and disposal of excess materials, imported borrow, supplying and placement of aggregate base, asphalt concrete removal and replacement as part of curb ramp reconstruction work, portland cement concrete, truncated domes, retaining curbs, dowels, reinforcement materials, relocating or resetting signs, and coordination with utility agencies (if needed), as shown on the Plans and in compliance with the Plans, Specifications and these Technical Specifications and as directed by the engineer, shall be paid for at the contract unit price paid for "Reconstruct Handicap Ramp," and no additional compensation will be allowed therefor.

Asphalt Concrete replaced in front of curb ramps as part of reconstruction work, shall be considered as included in the contract unit price paid per each curb ramp and no additional compensation will be allowed therefor.

SECTION TS-20 SUBSURFACE DRAIN

A. GENERAL

Subsurface drain shall be installed as shown on the plans or as directed by the engineer. Subsurface drain shall be installed in conformance with City of Brentwood Standard Plan ST-24 “Subsurface Drain Below Curb and Sidewalk”, Section 68 “Subsurface Drains” of the Caltrans Standard Specifications, and as modified by the plans.

The Contractor shall reuse the existing aggregate base removed to install the subsurface drain and permeable material. The Contractor shall compact the aggregate base to not less than 95% relative compaction. Excess base material shall become the property of the contractor and no additional payment will be made for disposal.

B. MEASUREMENT AND PAYMENT

Full compensation for furnishing all labor, materials, tools, equipment, and incidentals, and for doing all work involved in compliance with the Plans, Specifications and this specification for Subsurface Drain, including but not limited to removal of existing subgrade or aggregate base, furnishing and installing subsurface drain, permeable material, and filter fabric, compaction of subgrade or aggregate base, shall be included in the linear foot price paid for “Subsurface Drain” and no additional compensation will be allowed therefor.

APPENDICES

APPENDIX A Standard Plans

APPENDIX B Streets List and Estimated Quantities

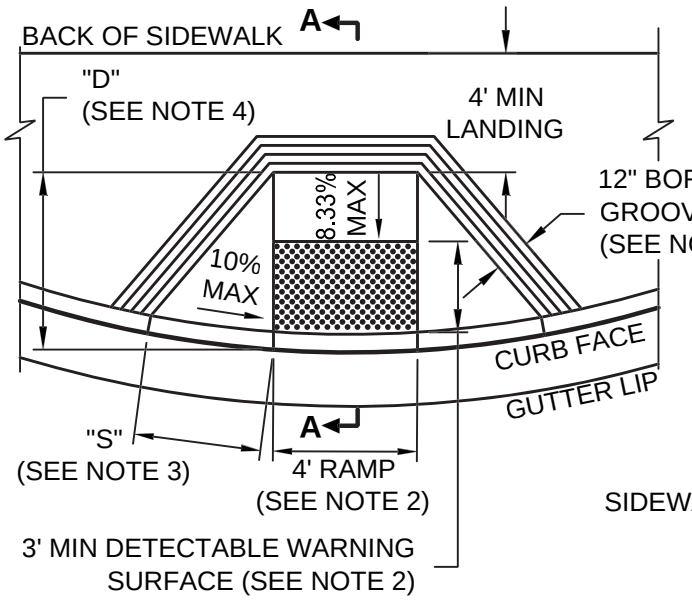

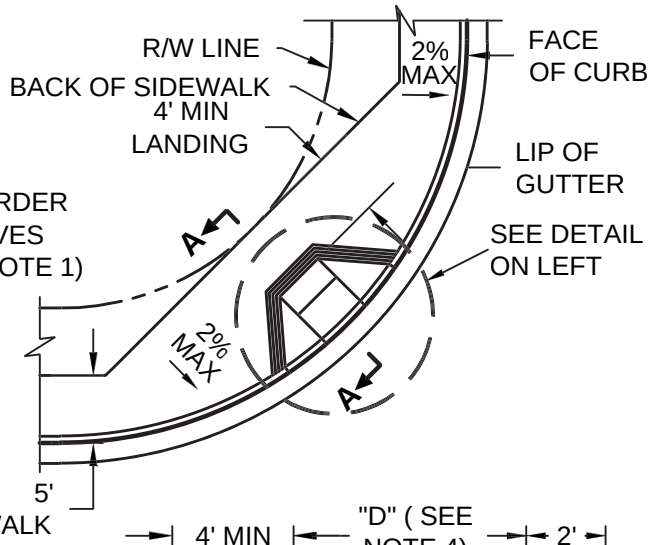

TYPE "A"

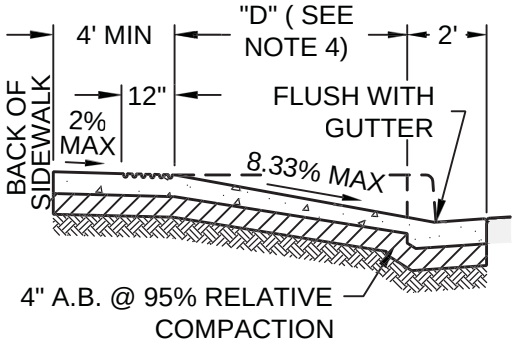

SECTION A-A

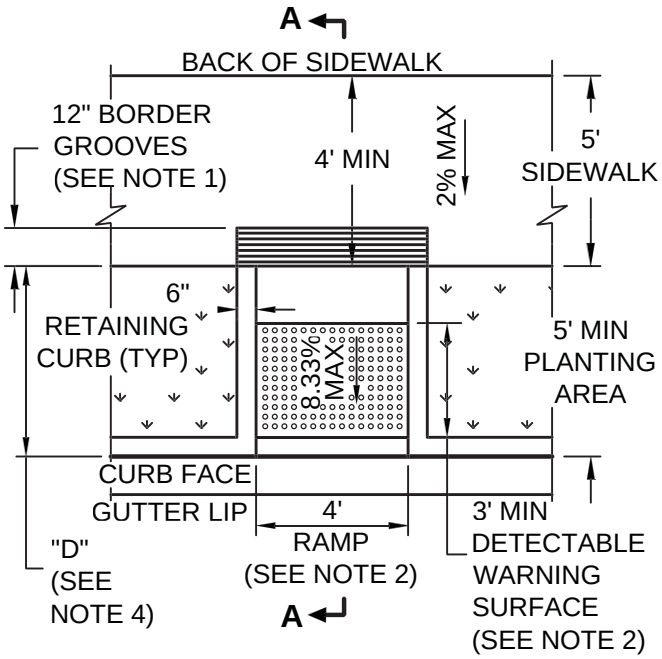

TYPE "B"

NOTES:

1. CURB RAMPS SHALL HAVE A 12" WIDE BORDER WITH ¼" GROOVES APPROX ¾" O.C. AT THE LEVEL OF THE SIDEWALK. SEE GROOVING DETAIL ON ST-21c.
2. CURB RAMPS SHALL HAVE A DETECTABLE WARNING SURFACE. SEE HANDICAP RAMP DETAILS ON ST-21c AND NOTE 11 ON ST-21d.
3. "S"=SLOPE DISTANCE (SEE TABLE ON ST-21d).
4. "D"=RAMP LENGTH (SEE TABLE ON ST-21d).
5. SEE ST-21d AND ST-21e FOR ADDITIONAL HANDICAP NOTES.

(Not To Scale)

REGISTERED PROFESSIONAL ENGINEER
BALWINDER S. GREWAL
C 49122
EXP. 9/30/14
STATE OF CALIFORNIA

PUBLIC WORKS DEPARTMENT

THE CITY OF BRENTWOOD

HANDICAP RAMP TYPE "A" AND "B"

BALWINDER S. GREWAL CITY ENGINEER

DATE: JULY 22, 2008
REVISED: DEC. 31, 2013

SHEET No.
ST-21a

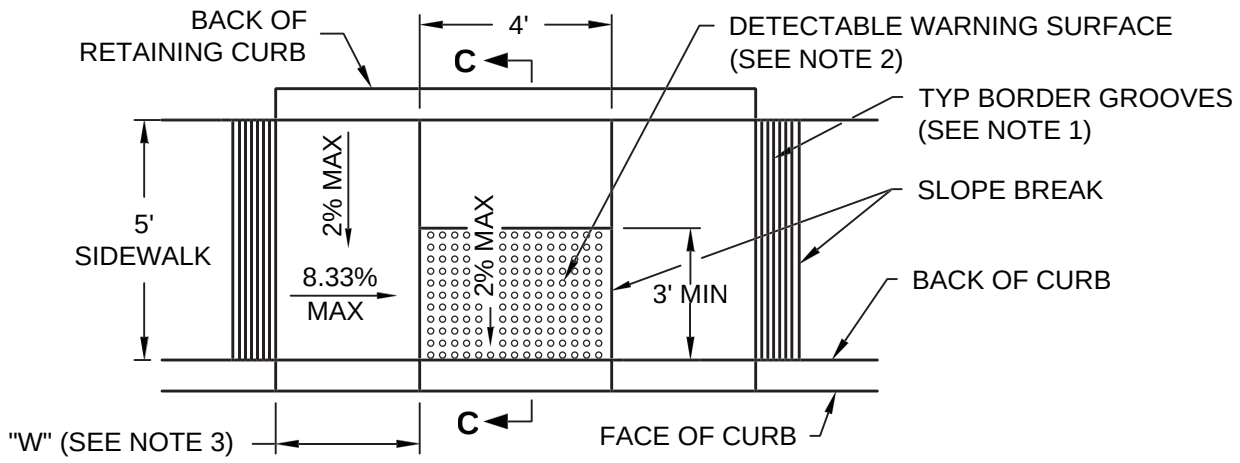

TYPE "C"

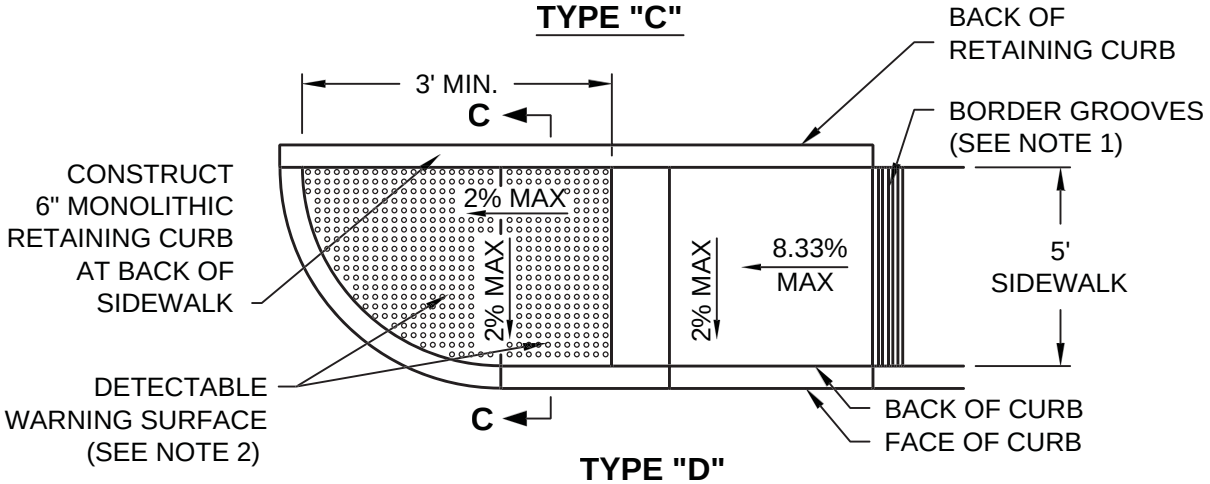

TYPE "D"

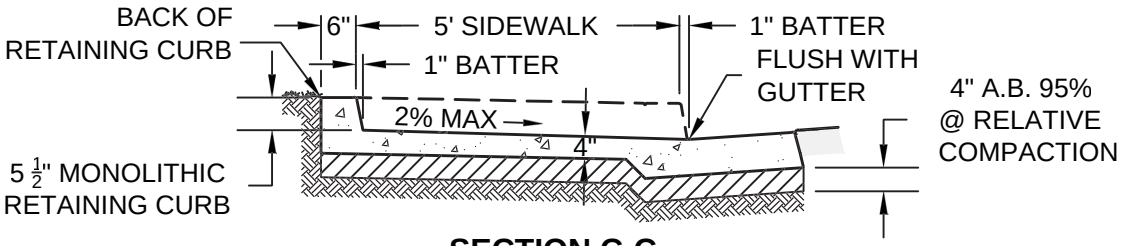

SECTION C-C

NOTES:

1. CURB RAMPS SHALL HAVE A 12" WIDE BORDER WITH 1/4" GROOVES APPROX 3/4" O.C. AT LEVEL SURFACE OF THE SIDEWALK. SEE GROOVING DETAIL ON ST-21c.
2. CURB RAMPS SHALL HAVE A DETECTABLE WARNING SURFACE. SEE NOTE 11 ON ST-21d FOR DETECTABLE WARNING SURFACES AND TRUNCATED DOME GENERAL INFORMATION.
3. "W" = CURB HEIGHT MAX SLOPE DIMENSION (SEE TABLE ON ST-21d).
4. SEE ST-21d & ST-21e FOR ADDITIONAL HANDICAP RAMP NOTES.

(Not To Scale)

PUBLIC WORKS DEPARTMENT

THE CITY OF BRENTWOOD

HANDICAP RAMP TYPE "C" AND "D"

BALWINDER S. GREWAL CITY ENGINEER

DATE:	JULY 22, 2008	SHEET No.
REVISED:	DEC. 31, 2013	ST-21b

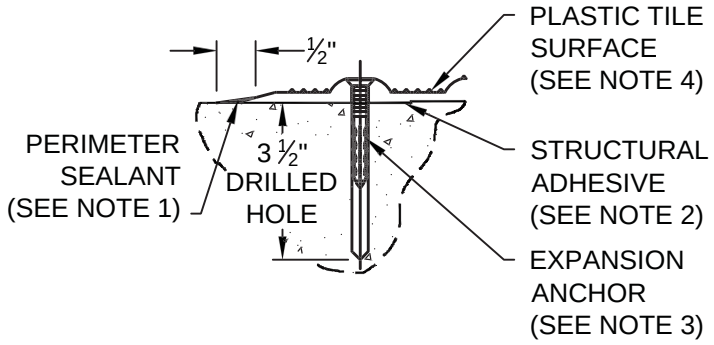

SURFACE APPLIED TILE INSTALLATION

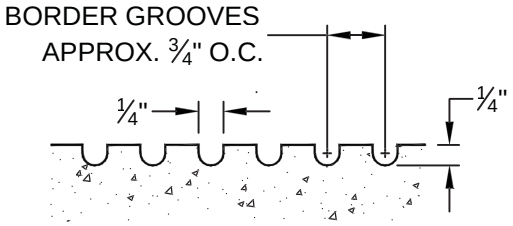

GROOVING DETAIL

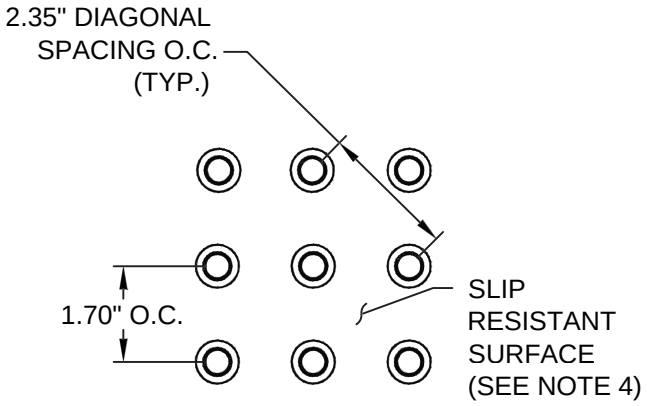

RAISED TRUNCATED DOME PATTERN

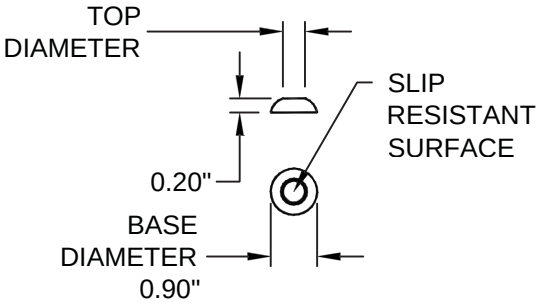

RAISED TRUNCATED DOME

NOTES:

1. APPLY PERIMETER SEALANT AT PERIMETER OF PLASTIC TILE AFTER FASTENING. TOOL SMOOTH TO BLEND TILE EDGE WITH ADJACENT SURFACE.
2. STRUCTURAL ADHESIVE AT FULL PERIMETER AND THROUGH CENTER OF PLASTIC TILE EACH WAY.
3. ¼" x 1 ½" LG COLOR MATCHED EXPANSION ANCHOR PART NO. ADA-S-FASTN 12" O.C.
4. SLIP RESISTANT PLASTIC TILE SURFACE. PLASTIC TILES WITH A MIN. OF 40 POINTS PER SQUARE INCH.
5. SEE ST-21d & ST-21e FOR ADDITIONAL HANDICAP RAMP NOTES.

(Not To Scale)

PUBLIC WORKS DEPARTMENT

THE CITY OF BRENTWOOD

HANDICAP RAMP DETAILS

BALWINDER S. GREWAL CITY ENGINEER

DATE:	APRIL 27, 2007	SHEET No.
REVISED:	DEC. 31, 2013	ST-21c

CURB HEIGHT	RAMP LENGTH "D"	DISTANCE "S"	SLOPE "W"
4"	4.6'	3.33'	4.0'
5"	5.9'	4.17'	5.0'
6"	7.2'	5.0'	6.0'
7"	8.6'	5.83'	7.0'
8"	9.9'	6.66'	8.0'

CURB HEIGHT SLOPE DIMENSIONS TABLE

NOTES:

1. HANDICAP RAMPS SHALL BE CONSTRUCTED AT MIDPOINT OF CURB RETURNS.
2. ALL CONCRETE SHALL BE CLASS B, 2500 P.S.I. MINIMUM, WITH 1 ½ LBS. FIBRILLATED POLYPROPYLENE FIBERS PER CUBIC YARD.
3. ALL CONCRETE SHALL HAVE A MINIMUM 4" CUSHION OF CLASS 2 A.B. @ 95% RELATIVE COMPACTION (D1557-78) ON COMPACTED SUB-GRADE. THE USE OF RECYCLED A.B. SHALL NOT BE ALLOWED.
4. RAMPS SHALL HAVE HEAVY BROOM FINISH TRANSVERSE TO THE SLOPE OF THE RAMP.
5. CONSTRUCT DEEP SCORE LINES AT LEADING EDGE OF TACTILE STRIPS.
6. CROSSWALKS SHALL BE STRIPED CENTERED ON THE LANDING OF THE HANDICAP RAMP.
7. CURB RAMP SIDE SLOPE VARIES UNIFORMLY TO A MAXIMUM OF 10% AT CURB TO CONFORM WITH LONGITUDINAL SIDEWALK SLOPE ADJACENT TO TOP OF RAMP, EXCEPT IN TYPE 'C' OR 'D'
8. UTILITY PULL BOXES, MANHOLES, VAULTS, AND ALL OTHER UTILITY FACILITIES WITHIN THE BOUNDARIES OF THE CURB RAMP WILL BE RELOCATED BY OTHERS PRIOR TO, OR IN CONJUNCTION WITH, CURB RAMP CONSTRUCTION.
9. DOWEL CURB RAMPS AT ALL COLD JOINTS IN EXISTING CONCRETE WITH #3 REBARS 12" LONG 36" INTERVALS. DRIVE TIGHT FIT OR EPOXY. EXPANSION JOINTS AND/OR WEAKENED PLANE JOINTS SHALL SEPARATE CURB RAMPS IN NEW CONCRETE CONSTRUCTION.
10. ALL SLOPES RELATIVE TO EXISTING STREET GRADES.
11. GENERAL NOTES ON TRUNCATED DOMES:
    A. WHEELCHAIR CURB CUT RAMPS SHALL HAVE A PREFABRICATED DETECTABLE WARNING SURFACE INSTALLED ON RAMP SURFACE CONSISTING OF TILE(S) WITH RAISED TRUNCATED DOMES CONFORMING TO THE DETAILS ON THIS STANDARD PLAN AND SHALL BE IN CONFORMANCE WITH THE REQUIREMENTS ESTABLISHED BY THE DEPARTMENT OF GENERAL SERVICES, DIVISION OF STATE ARCHITECT; AND THE AMERICAN WITH DISABILITIES ACT (TITLE 49 CFR TRANSPORTATION, PART 37.9 STANDARDS FOR ACCESSIBLE TRANSPORTATION FACILITIES, APPENDIX A, SECTION 4.29.2 DETECTABLE WARNINGS ON WALKING SURFACES) AND SHALL BE CAST IN PLACE IN CONFORMANCE WITH THE MANUFACTURER'S CAST IN PLACE RECOMMENDATIONS.
    B. DETECTABLE WARNING SURFACE SHALL EXTEND THE FULL WIDTH AND 3' DEPTH OF THE RAMP. THE EDGE OF THE DETECTABLE WARNING SURFACE NEAREST THE STREET SHALL BE BETWEEN 6" AND 8" FROM THE GUTTER FLOWLINE. WHEN A DETECTABLE SURFACE EDGE AND/OR DOMES IS CUT AND THE RESULTING EDGE IS NOT FLUSH WITH THE SURFACE OF THE RAMP, THE EDGE SHALL BE BEVELED OR CONFORMED WITH PERIMETER SEALANT AT 1:2 MAX. SLOPE IN ACCORDANCE WITH THE MANUFACTURER'S REQUIREMENTS.

(Not To Scale)

REGISTERED PROFESSIONAL ENGINEER
BALWINDER S. GREWAL
C 49122
EXP. 9/30/14
STATE OF CALIFORNIA

PUBLIC WORKS DEPARTMENT

THE CITY OF BRENTWOOD

HANDICAP RAMP NOTES-1

BALWINDER S. GREWAL CITY ENGINEER

DATE: APRIL 27, 2007
REVISED: DEC. 31, 2013

SHEET No.
ST-21d

NOTES:

12. MANUFACTURER(S) WARRANTY ON TRUNCATED DOMES:
    MANUFACTURER(S) SHALL PROVIDE A WRITTEN 5-YEAR WARRANTY FOR PREFABRICATED DETECTABLE WARNING SURFACES, GUARANTEEING REPLACEMENT WHEN THERE IS DEFECT IN THE DOME SHAPE, COLOR FASTNESS, SOUND-ON-CANE ACOUSTIC QUALITY, RESILIENCE, OR ATTACHMENT. WARRANTY PERIOD SHALL BEGIN UPON ACCEPTANCE OF WORK.
13. TRUNCATED DOMES SPECIFICATIONS:
    A. PLASTIC TILES SHALL BE "ARMOR TILE" AS MANUFACTURED BY ENGINEERED PLASTICS INC., OR APPROVED EQUAL, TEL: (800) 682-2525. TILES SHALL BE A SINGLE TILE, 36" x 48" NOMINAL, MANUFACTURED OF AN EPOXY POLYMER COMPOSITE WITH AN ULTRAVIOLET STABILIZED, COLORFAST COATING EMPLOYING ALUMINUM OXIDE PARTICLES IN THE TRUNCATED CONES.
    B. COLOR SHALL BE DARK GRAY (FEDERAL COLOR #36118).
    C. THE TILE SHALL INCORPORATE AN IN-LINE PATTERN OF TRUNCATED DOMES; .20" IN HEIGHT, .90" DIAMETER AT THE BASE, AND .40" DIAMETER AT THE TOP OF DOME, SPACED 2.35" NOMINAL AS MEASURED ON A DIAGONAL AND 1.70" NOMINAL AS MEASURED SIDE BY SIDE; ROWS SHALL BE ORIENTED PARALLEL WITH RAMP DIRECTION; DOMES SHALL BE ALIGNED THROUGHOUT ENTIRE DETECTABLE SURFACE AREA.
    D. THE FIELD AREA SHALL CONSIST OF A NON-SLIP SURFACE WITH A MIN. OF 40-90 RAISED POINTS .045" HIGH, PER SQUARE INCH.
    E. THE TILE SHALL BE MANUFACTURED WITH EMBEDMENT FLANGES, 3" CENTER TO CENTER, 1" MIN. DEPTH WITH $\frac{5}{16}$" DIAMETER HOLES, 3 HOLES MIN. PER FLANGE. WHERE TILES ARE CUT, SEALANT SHALL BE WORKED UNDER THE TILE ALONG PERIMETER WHEREVER THE EMBEDMENT FLANGE IS REMOVED.
14. SURFACE APPLICATION ON TRUNCATED DOMES:
    A. UPON APPROVAL FROM THE CITY ENGINEER, RETROFIT AND UNIQUE CIRCUMSTANCES MAY APPLY TO SURFACE APPLICATION ON TRUNCATED DOMES.
    B. SURFACE APPLIED DETECTABLE TILES SHALL BE "ARMOR TILE" MANUFACTURED WITHOUT EMBEDMENT FLANGES AND THE EDGES SHALL BE BEVELED, SLOPED AT 1:2 MAX. WHEN THE DETECTABLE SURFACE EDGE AND/OR DOME IS CUT AND THE RESULTING EDGE IS NOT FLUSH WITH THE SURFACE OF THE RAMP, THE EDGE SHALL BE BEVELED OR CONFORMED WITH PERIMETER SEALANT AT 1:2 MAX. SLOPE IN ACCORDANCE WITH THE MANUFACTURER'S REQUIREMENTS.
    C. ADHESIVE: URETHANE ELECTROMETRIC ADHESIVE BY SKA CORP., UNIROYAL, MAPEI, BOSTIK, OR APPROVED EQUAL.
    D. FASTENERS: COLOR MATCHED, CORROSION RESISTANT, FLAT HEAD DRIVE ANCHOR: $\frac{1}{4}$" DIAMETER x $\frac{3}{4}$" LONG, 12" CENTER TO CENTER BOTH DIRECTIONS MIN. ARMOR-DRIVE BY ENGINEERED PLASTICS OR APPROVED EQUAL.
    E. PERIMETER SEALANT: EPOXY TWO COMPONENT SEALANT BY POWERS, SIMPSON, HILTI OR APPROVED EQUAL. ALUMINUM GRAY COLOR.

(Not To Scale)

REGISTERED PROFESSIONAL ENGINEER
BALWINDER S. GREWAL
C 49122
EXP. 9/30/14
STATE OF CALIFORNIA

PUBLIC WORKS DEPARTMENT

THE CITY OF BRENTWOOD

HANDICAP RAMP NOTES-2

BALWINDER S. GREWAL CITY ENGINEER

DATE: APRIL 27, 2007
REVISED: DEC. 31, 2013

SHEET No. **ST-21e**

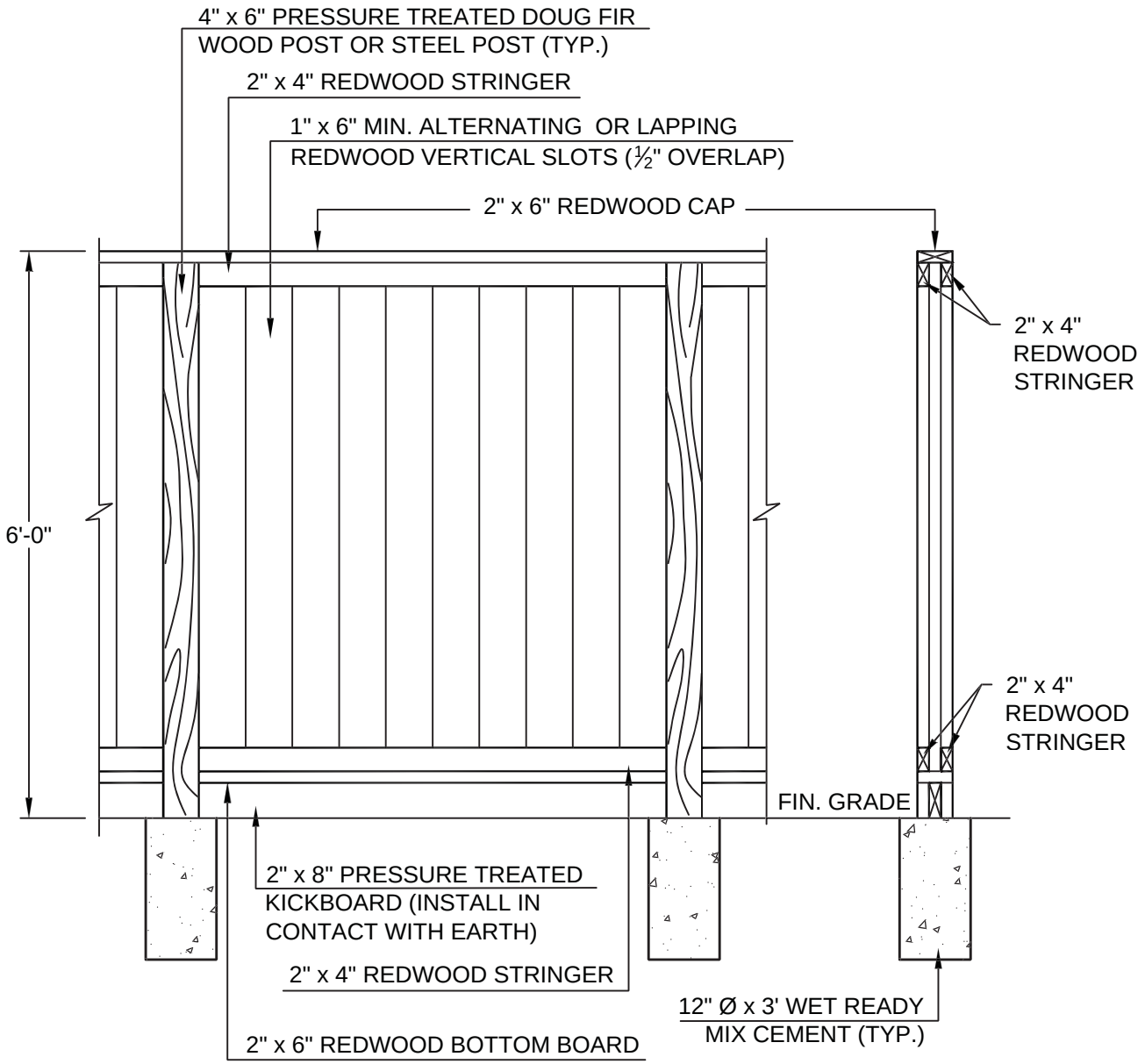

NOTES:

1. THIS STANDARD SHALL BE USED FOR ALL RESIDENTIAL PROPERTY LINE WOOD FENCING UNLESS ADDITIONAL UPGRADES ARE REQUIRED BY THE PLANNING COMMISSION.
2. FOR PARKS AND TRAILS ADJACENT TO PRIVATE PROPERTY, STANDARD PLAN L-16 SHALL BE USED.

(Not To Scale)

REGISTERED PROFESSIONAL ENGINEER
BALWINDER S. GREWAL
C 49122
EXP. 9/30/14
STATE OF CALIFORNIA

PUBLIC WORKS DEPARTMENT

THE CITY OF BRENTWOOD

STANDARD RESIDENTIAL GOOD-NEIGHBOR FENCE

BALWINDER S. GREWAL CITY ENGINEER

DATE: JUNE 20, 2003
REVISED: DEC. 31, 2013

SHEET No.
ST-22

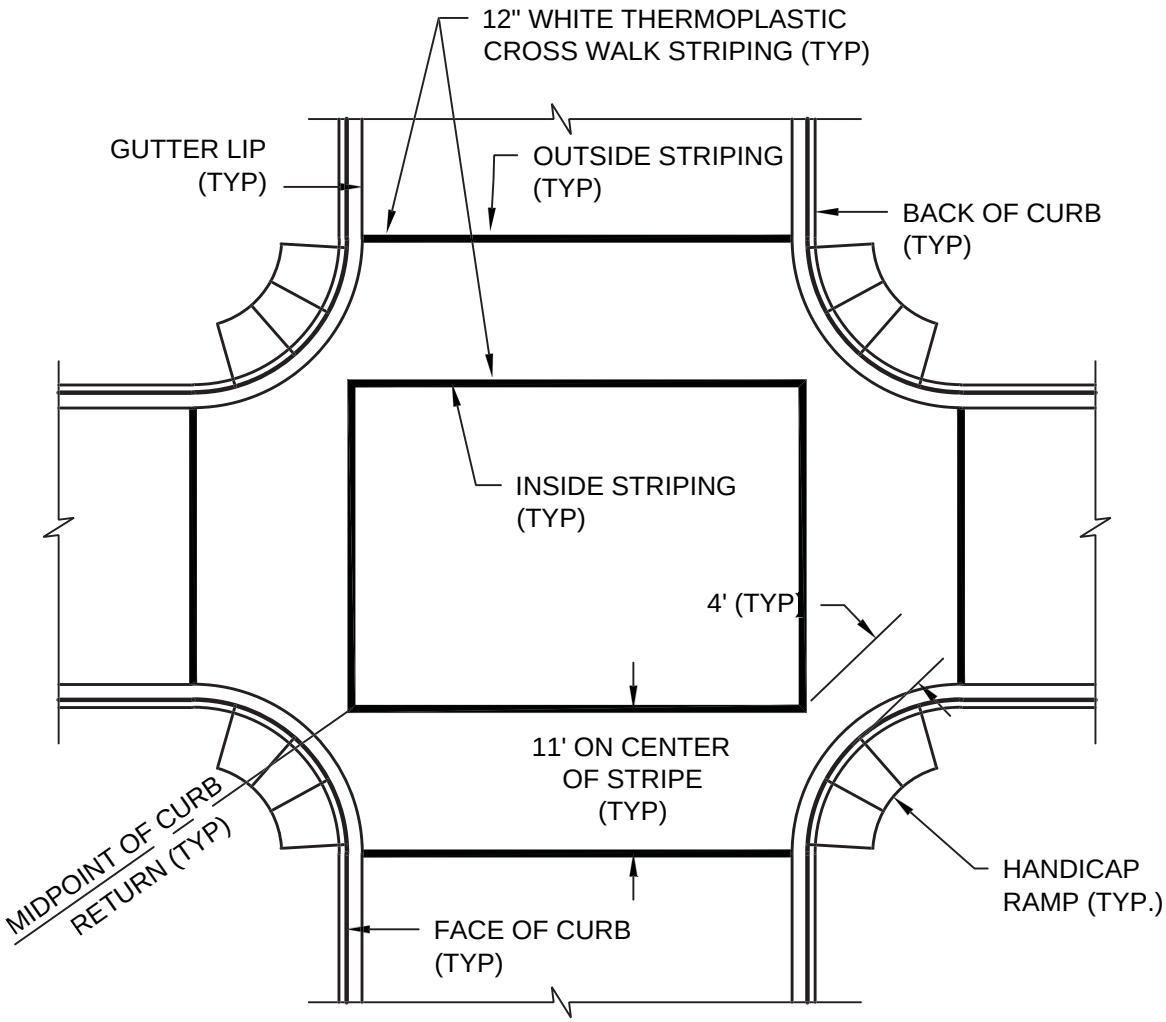

NOTES:

1. ON ALL CURB RETURNS, MARK OFF A POINT 4' FROM THE MIDPOINT OF THE CURB RETURN AT THE FACE OF CURB TOWARDS THE MIDPOINT OF THE DIAGONALLY OPPOSITE CURB RETURN.
2. CONNECT THOSE POINTS TO FORM INSIDE STRIPING.
3. MEASURE OUTSIDE STRIPING 11' ON CENTER OF THE INSIDE STRIPING.
4. AT SIGNALIZED INTERSECTIONS, PED PUSH BUTTONS SHALL BE INSTALLED PER ADA STANDARDS.
5. AREAS WHERE "STOP SIGN" IS NOT REQUIRED, ADD W11-2 WITH W16-7p AT THE X-WALK AND W11-2 WITH W16-9p FLUORESCENT YELLOW GRAIN MICROPRISMATIC BACKGROUND AND EC TRANSPARENT OVERLAY FILM BLACK 1178.
6. LOCATION/DISTANCE OF SIGNS WILL BE DETERMINED BY THE TRAFFIC ENGINEER OR USE MUTCD MINIMUM RECOMMENDED SIGN PLACEMENT CHART.

(Not To Scale)

REGISTERED PROFESSIONAL ENGINEER
BALWINDER S. GREWAL
C 49122
EXP. 9/30/14
STATE OF CALIFORNIA

PUBLIC WORKS DEPARTMENT

THE CITY OF BRENTWOOD

CROSS WALK STRIPING ON ARTERIAL STREETS

BALWINDER S. GREWAL CITY ENGINEER

DATE: MAR. 13, 2001
REVISED: DEC. 31, 2013

SHEET No.
ST-28

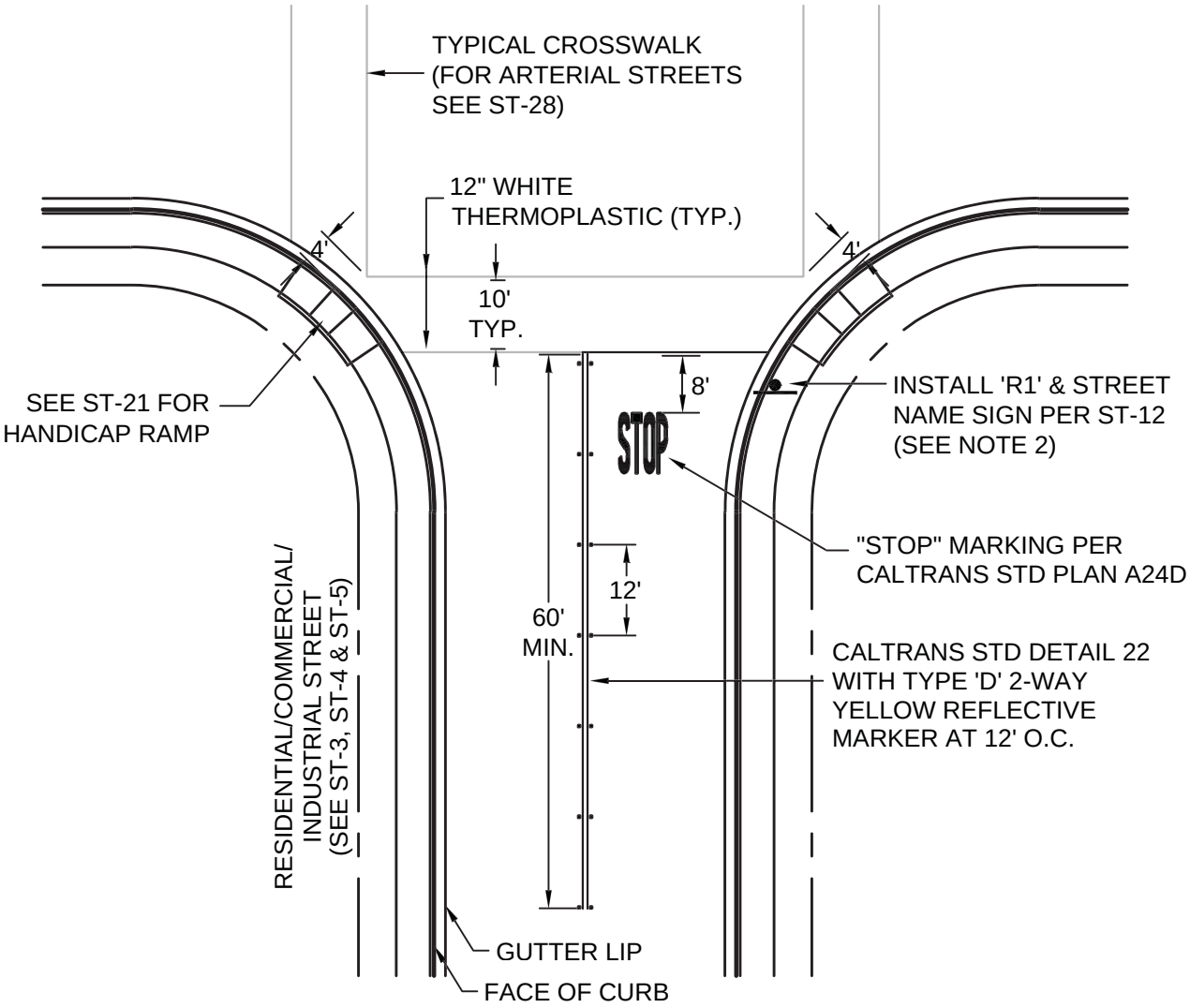

NOTES:

1. ALL PAVEMENT MARKINGS SHALL BE THERMOPLASTIC.
2. 'R1' SHALL BE INSTALLED IN THE LANDSCAPE STRIP ON SEPARATED SIDEWALK OR 18" BEHIND BACK OF WALK ON MONOLITHIC SIDEWALK.
3. NO PERMANENT MARKINGS SHALL BE PLACED UNTIL THE CITY ENGINEER OR HIS REPRESENTATIVE APPROVES THE CAT-TRACKING IN THE FIELD.
4. CROSSWALKS NEAR SCHOOLS SHALL BE YELLOW.

(Not To Scale)

REGISTERED PROFESSIONAL ENGINEER
BALWINDER S. GREWAL
C 49122
EXP. 9/30/14
STATE OF CALIFORNIA

PUBLIC WORKS DEPARTMENT

THE CITY OF BRENTWOOD

TYPICAL 'STOP' INTERSECTION

BALWINDER S. GREWAL CITY ENGINEER

DATE: JAN. 20, 2005
REVISED: DEC. 31, 2013

SHEET No.
ST-37

Appendix B - Streets List and Estimated Quantities

2016 PMP ESTIMATED QUANTITIES

BASE BID

STREETS LIST

Location	Garbage Pick Schedule	Street Name	Begin Section	End Section	Grind and Overlay (SF)	Slurry Seal (SF)	Blue Marker (EA)	"STOP" Legend (EA)	SIGNAL AHEAD Legend	STOP AHEAD Legend (EA)	SLOW SCHOOL XING (EA)	TYPE I Arrow (EA)	TYPE IV (L &R) Arrow (EA)	TYPE VI Arrow (EA)	TYPE VII Arrow (EA)	Det 2 (LF)	Det 9 (LF)	DET 12 (LF)	DET 21 (LF)	DET 22 (LF)	DET 24 (LF)	Det 27B (LF)	DET 29 (LF)	DET 32 (LF)	DET 37B (LF)	DET 38 (LF)	DET 39 & 39A (LF)	DET 40 (LF)	12" W TH (LF)	12" Y X-WALK (LF)	BIKE LN. Symbol+ Arrow (EA)	Special Notes and Markings (Varies)
4	Tuesday	Deer Creek Ln	Central Blvd	Fawnbrook Dr	22,000		2	2												365	100		120						252			
1	Tuesday	Dainty Ave	Central Blvd	Marsh Creek	11,180		1	1			1									295							334			105		
1, S4	Tuesday	Central Blvd	Minnesota Ave	Dainty Ave	6,500	48,550	1	2					4				1,111				1,200					313	1,027		30	180	2	
4, S4	Tuesday	Fawnbrook Dr	Antelope Ter	Willow Creek Ter	4,600	66,748	6	2								1,120				120									190			
3	Friday	East Country Club Dr	Balfour Rd	Palm Dr	48,529		1	3					2	2	1						1,200	594				277	1,236		362		4	
2, S2	Tuesday	O'Hara Ave	Lone Tree Ave	Grant St	22,725	148,000	5	2		1		**2**	18								4,840	1,250	75			845	3,450		205		13	
1	Monday	O'Hara Ave	Saddle Creek Ct	Sand Creek Rd	14,760									4			96			80						190	360		66		2	
5, S1	Wednesday	Shady Willow Ln	Sand Creek Rd	Grant St	91,695	270,000	8		3				22	1				5,945			2,625					1,160	6,160		841	420	15	special dot
S1	Wednesday	Los Cielos Way	Shady Willow Lane	Las Colinas Dr		7,202	1	1					1							135						50			140			
S1	Wednesday	Las Colinas Dr	Los Cielos Way	Las Montanas Ct		35,480	2	1												60									24			
S1	Wednesday	Las Flores Dr	Los Cielos Way	Las Montanas Ct		16,547	1	1												60									21			
S1	Wednesday	Las Montanas Ct	Shady Willow Lane	End of Court		31,514	3	1												60									140			
S1	Wednesday	Empire Ave	Shady Willow Ln	Grant St		100,977	3						16								3,980					1,100	2,832		681		13	
S1	Wednesday	Apricot Way	Indian Springs Dr	Fairview Ave		106,200	2	2					5		5					105	3,005		475	250		280			280			5 delineators
S1	Wednesday	Grant St	Fairview Ave	Shady Willow Ln		145,900	8						10		6					3,180			500			585	3,610		370	115	6	
S1	Wednesday	Cipriani Pl	Fairview Ave	End of Court		24,694	1	2												60	210								130			
S1	Wednesday	Albani Pl	La Pergola Dr	End of Court		18,250	1	1												60									20			
S1	Wednesday	La Pergola Dr	Edera Pl	Giotto Dr		51,856	3	2											120	120									50			
S1	Wednesday	Edera Pl	Fiorita Way	La Pergola Dr		11,900		1												60									20			
S1	Wednesday	Fiorita Way	Apricot Way	Antica Dr		20,570	2	2												120									123			25 Pvmt Mark
S1	Wednesday	Antica Dr	La Pergola Dr	La Fonte Dr		32,640	3	4												240									81			
S1	Wednesday	Sofia Ct	Antica Dr	End of Court		15,700	1	1												60									20			
S1	Wednesday	Sofia Way	Antica Dr	Grant St		36,340	2	3												120	170								170			2-25 Pvmt Mark
S1	Wednesday	Giotto Dr	La Pergola Dr	La Fonte Dr		33,660	2	2											120	120									40			
S1	Wednesday	La Fonte Dr	Giotto Dr	La Fonte Ct		35,870	2	1											120	60									16			
S1	Wednesday	La Fonte Ct	La Fonte Dr	End of Court		7,200	1	1												60									20			
S1	Wednesday	Mediterraneo Way	Grant St	St Michael's Way		30,330	1	1													70								200			
S1	Wednesday	Mediterraneo Pl	St Michael's Way	End of Court		19,848	2																									
S1	Wednesday	Toulouse Ln	Mediterraneo Way	End of Street		34,374	1	1												60									20			
S1	Wednesday	Romulus Pl	Toulouse Ln	End of Court		17,562	1	1												60									21			
S1	Wednesday	Moreau Way	Toulouse Ln	Apricot Way		38,646	3	4												180	70		130						332			
S1	Wednesday	Tanglewood Ln	Toulouse Ln	St Michael's Way		18,836	2	2												120									40			
1, S1	Wednesday	Gabriella Ln	St Michael's Way	Apricot Way	2,100	18,126	1	2												60	60								150			
S1	Wednesday	St. Michael's Way	Mediterraneo Way	End of Street		46,920	2	3												180									290			
S1	Wednesday	St. Michael's Ct	St Michael's Way	End of Court		13,832	1	1												60									20			
S1	Wednesday	Tremont Ct	Spanish Trail St	End of Court		21,230	2	1												60									22			
S1	Wednesday	Arch Ct	Spanish Trail St	End of Court		22,770	2	1												60									22			
S1	Wednesday	Spanish Trail St	Grant St	Spanish Trail Ct		17,761		2												60	220								205			
S1	Wednesday	Spanish Trail Ct	Spanish Trail St	End of Court		12,336	1	1												60									85			
S1	Wednesday	Barcelona Ct	Barcelona Way	End of Court		21,988	2	1												60									90			
S1	Wednesday	Barcelona Way	Barcelona Ct	Keystone Way		18,728	1	1												60									90			
S1	Wednesday	Keystone Way	Barcelona Way	Indian Springs Dr		17,325	1																									
S1	Wednesday	Indian Springs Dr	Keystone Way	Indian Springs Ct		25,908	1	3												180									55			
S1	Wednesday	Indian Springs Ct	Apricot Way	End of Court		10,688	1	1												60									20			
S1	Wednesday	Capital Dr	Indian Springs Dr	Barcelona Way		14,355	1	2												120									40			
S1	Wednesday	Cherry Blossom Ct	Mont Clair Pl	End of Court		19,595	1	1											85	60									15			
S1	Wednesday	Mont Clair Pl	Apricot Way	End of Street		17,820	2	1													150		60						220			25 Pvmt Mark
S1	Wednesday	Ashborne Pl	Strathaven Pl	Mont Clair Pl		23,657		2												120									42			
S1	Wednesday	Sage Ct	Ashbourne Pl	End of Court		20,394	2	1												60									20			
S1	Wednesday	Strathaven Pl	Apricot Way	End of Street		26,730	3	1												60									120			25 Pvmt Mark
S1	Wednesday	Brampton Pl	Strathaven Pl	End of Court		22,269	1	1												60									20			
S1	Wednesday	Chatham Pl	Brampton Pl	End of Court		22,220	2	1											80	60									22			
S1	Wednesday	Dupre Way	Apricot Way	Water St		14,110	2	2												120									140			
S1	Wednesday	Water St	Rampart Way	End of Street		31,192	1	1											90	60									20			
S1	Wednesday	Rampart Way	Apricot Way	Helena Way		34,485	2	2												120									130			
S1	Wednesday	Helena Way	Nassau Ln	End of Street		14,348																										
S1	Wednesday	Nassau Ln	Helena Way	Roper Cir		14,348	1	1												60									95			
S1	Wednesday	Roper Cir	Rampart Way	Royal Palm Ln		50,320	4	3												180									140			
S1	Wednesday	Yates Ct	Royal Palm Ln	End of Court		20,668	2																									
S1	Wednesday	Royal Palm Ln	Empire Ave	Roper Cir		4,624		1												60									105			
S1	Wednesday	Cornell Dr	Roper Cir	Azalea Way		16,995	1	1												60									20			
S1	Wednesday	Great Meadow Ln	Nassau Ln	Cornell Dr		13,090	1	2												120									40			
S1	Wednesday	Great Meadow Ct	Cornell Dr	End of Court		9,856	1	1												40									22			
S1	Wednesday	Azalea Way	Cornell Dr	Nassau Ln		14,110		1												60									20			
A. Total Quantities (STREETS BASE BID)					**224,089**	**2,078,192**	**114**	**89**	**3**	**1**	**1**	**2**	**78**	**7**	**12**	**1,120**	**1,207**	**5,945**	**615**	**8,280**	**17,900**	**1,844**	**1,360**	**250**	**-**	**4,800**	**19,009**	**-**	**7,185**	**820**	**55**	**0**

2016 PMP ESTIMATED QUANTITIES

BASE BID

PARK TRAILS

Location	Garbage Pick Schedule	Trail Name	Begin Section	End Section		Asphalt Pavem't. Overcoat (SF)	Blue Marker (EA)	"STOP" Legend (EA)	SIGNAL AHEAD Legend	STOP AHEAD Legend (EA)	SLOW SCHOOL XING (EA)	TYPE I Arrow (EA)	TYPE IV (L &R) Arrow (EA)	TYPE VI Arrow (EA)	TYPE VII Arrow (EA)	Det 2 (LF)	Det 9 (LF)	DET 12 (LF)	DET 21 (LF)	DET 22 (LF)	DET 24 (LF)	Det 27B (LF)	DETAIL 29 (LF)	DET 32 (LF)	DET 37B (LF)	DET 38 (LF)	DET 39 & 39A (LF)	DET 40 (LF)	12" W TH (LF)	12" Y X-WALK (LF)	BIKE LN. Symbol+ Arrow (EA)	Special Notes and Markings (Varies)
P1		Neroly to Lone Tree Trail				62,200																										
P2		Tresh Road				23,340																										
P3		Deer Creek Apple Hill Trail				42,100																										
P4		Cortona Trail 1491				12,090																										
P5		Bypass Trail				18,684																										
B. Total Quantities (PARK TRAILS BASE BID)					**-**	**158,414**	**-**	**-**	**-**	**-**	**-**	**-**	**-**	**-**	**-**	**-**	**-**	**-**	**-**	**-**	**-**	**-**	**-**	**-**	**-**	**-**	**-**	**-**	**-**	**-**	

BID ALTERNATE

ADDITIONAL STREETS (ONLY AS DIRECTED)

Location	Garbage Pick Schedule	Street Name	Begin Section	End Section	Grind and Overlay (SF)	Slurry Seal (SF)	Blue Marker (EA)	"STOP" Legend (EA)	SIGNAL AHEAD Legend	STOP AHEAD Legend (EA)	SLOW SCHOOL XING (EA)	TYPE I Arrow (EA)	TYPE IV (L &R) Arrow (EA)	TYPE VI Arrow (EA)	TYPE VII Arrow (EA)	Det 2 (LF)	Det 9 (LF)	DET 12 (LF)	DET 21 (LF)	DET 22 (LF)	DET 24 (LF)	Det 27B (LF)	DET 29 (LF)	DET 32 (LF)	DET 37B (LF)	DET 38 (LF)	DET 39 & 39A (LF)	DET 40 (LF)	12" W TH (LF)	12" Y X-WALK (LF)	BIKE LN. Symbol+ Arrow	Special Notes and Markings (Varies)
6, S5	Thursday	Balfour Rd	East Coutry Club Dr	West City Limit	86,080	301,454	6					3	15	3	2			5,920		220	5,900	1,740	470			1,070	5,100	138	230	88	5	95 feet Parallel
7	Monday	Lone Oak Rd	Grant St	Country Ct	8,550																	650										
S3	Thursday	Minnesota Ave	Sand Creek Rd	Carmel Pkwy		51,355	2						13								700		240		27	500	710		162	135	2	
C. Total Quantities (STREETS BID ALTERNATIVE)					**94,630**	**352,809**	**8**	**-**	**-**	**-**	**-**	**3**	**28**	**3**	**2**	**-**	**-**	**5,920**	**-**	**220**	**6,600**	**2,390**	**710**	**-**	**27**	**1,570**	**5,810**	**138**	**392**	**223**	**7**	**0**