AD 98-2/CIFP 98-1
SPECIAL PLANNING AREA 'L'
BRENTWOOD CALIFORNIA

REGISTERED PROFESSIONAL ENGINEER — KENNETH R. TAPPIN — 52845 EXP. 12/31/02 — CIVIL — STATE OF CALIFORNIA

THESE ARE THE FINAL CONSTRUCTION PLANS FOR THE PROJECT WITH THE ADDITIONS NOTED FOR FIELD CHANGES BROUGHT TO THE ATTENTION OF THE ENGINEER BY THE DEVELOPER, CONTRACTOR, AND THE CITY ENGINEER.

KENNETH R. TAPPIN RCE 52845 — EXP. 12/31/02 — DATE 8-30-2000

GENERAL NOTES:

1. OWNER:
   SPA 'L', LLC.
   5976 W. LAS POSITAS BOULEVARD, SUITE 100
   PLEASANTON, CA 94588
   (925) 460-0100

2. CIVIL ENGINEER:
   CARLSON, BARBEE & GIBSON, INC.
   2000 CROW CANYON PLACE, SUITE 250
   SAN RAMON, CA 94583
   (925) 866-0322

3. SOILS ENGINEER:

   SOILS INVESTIGATION REPORT NO. _____, DATED: _____
   AND THE SUPPLEMENT DATED _____.

4. BENCH MARK: CONTRA COSTA COUNTY CONCRETE FASTENER AND TAG STAMPED BM #3172 IN NORTHEAST CORNER OF CONCRETE BRIDGE OVER SAND CREEK AT THE INTERSECTION OF FAIRVIEW AVENUE AND SAND CREEK ROAD.
   ELEVATION 96.859.

5. THE ENGINEER ASSUMES NO RESPONSIBILITY BEYOND THE ADEQUACY OF HIS DESIGN CONTAINED HEREIN.

6. SHOULD IT APPEAR THAT THE WORK TO BE DONE, OR ANY MATTER RELATIVE THERETO, IS NOT SUFFICIENTLY DETAILED OR EXPLAINED ON THESE PLANS, THE CONTRACTOR SHALL CONTACT KEN TAPPIN WITH CARLSON, BARBEE, & GIBSON, INC. AT (925) 866-0322 FOR SUCH FURTHER EXPLANATION AS MAY BE NECESSARY.

7. CITY OF BRENTWOOD STANDARD DRAWINGS AND SPECIFICATIONS, SPECIFIC NOTES AND DETAIL DRAWINGS HEREON AND IN THE SOILS REPORT, TAKE PRECEDENCE OVER GENERAL DRAWINGS AND PLANS UNLESS OTHERWISE DIRECTED BY THE ENGINEER. ANY DEVIATION FROM APPROVED PLANS DURING CONSTRUCTION WILL REQUIRE 48 HOURS PRIOR NOTICE TO THE ENGINEER AND APPROVAL OF THE CITY ENGINEER. AT LEAST ONE SET OF APPROVED PLANS SHALL BE ON THE SITE AT ALL TIMES FOR INSPECTION.

8. CONSTRUCTION CONTRACTOR AGREES THAT IN ACCORDANCE WITH GENERALLY ACCEPTED CONSTRUCTION PRACTICES, CONSTRUCTION CONTRACTOR WILL BE REQUIRED TO ASSUME SOLE AND COMPLETE RESPONSIBILITY FOR JOB SITE CONDITIONS DURING THE COURSE OF CONSTRUCTION OF THE PROJECT, INCLUDING SAFETY OF ALL PERSONNEL. THIS REQUIREMENT SHALL APPLY CONTINUOUSLY AND NOT BE LIMITED TO NORMAL WORKING HOURS, AND CONSTRUCTION CONTRACTOR FURTHER AGREES TO DEFEND, INDEMNIFY AND HOLD DESIGN PROFESSIONAL HARMLESS FROM ANY AND ALL LIABILITY, REAL OR ALLEGED, IN CONNECTION WITH THE PERFORMANCE OF WORK ON THIS PROJECT, EXCEPTING LIABILITY ARISING FROM THE SOLE NEGLIGENCE OF THE DESIGN PROFESSIONAL.

9. EXCAVATIONS SHALL BE ADEQUATELY SHORED, BRACED AND SHEETED SO THAT THE EARTH WILL NOT SLIDE OR SETTLE AND SO THAT ALL EXISTING IMPROVEMENTS OF ANY KIND WILL BE FULLY PROTECTED FROM DAMAGE. ANY DAMAGE RESULTING FROM LACK OF ADEQUATE SHORING, BRACING AND SHEETING, SHALL BE THE RESPONSIBILITY OF THE CONTRACTOR AND HE SHALL EFFECT NECESSARY REPAIRS OR RECONSTRUCTION AT HIS OWN EXPENSE. WHERE THE EXCAVATION FOR A CONDUIT TRENCH, STRUCTURE AND/OR BORING OR JACKING PIT IS FIVE FEET OR MORE IN DEPTH, THE CONTRACTOR SHALL CONFORM TO THE APPLICABLE CONSTRUCTION SAFETY ORDERS OF THE DIVISION OF INDUSTRIAL SAFETY OF THE STATE OF CALIFORNIA. THE CONTRACTOR SHALL ALWAYS COMPLY WITH OSHA REQUIREMENTS.

10. CONTRACTOR SHALL COMPLY WITH ALL STATE, COUNTY AND CITY LAWS AND ORDINANCES, AND REGULATIONS OF THE DEPARTMENT OF INDUSTRIAL RELATIONS, O.S.H.A., AND INDUSTRIAL ACCIDENT COMMISSION RELATING TO THE SAFETY AND CHARACTER OF WORK, EQUIPMENT, AND LABOR PERSONNEL.

11. ALL CONSTRUCTION MATERIALS AND METHODS SHALL COMPLY WITH THE LATEST ORDINANCES, SPECIFICATIONS AND STANDARDS OF THE CITY OF BRENTWOOD.

12. THE CONTRACTOR'S ATTENTION IS DIRECTED TO THE REQUIREMENTS OF THE DIVISION OF INDUSTRIAL SAFETY PERTAINING TO "CONFINED SPACES." ANY MANHOLE, CULVERT, DROP INLET OR TRENCH (WHICH COULD CONTAIN AIR), THAT IS NOT READILY VENTILATED, MAY BE CONSIDERED A "CONFINED SPACE."

13. CONTRACTOR SHALL POST EMERGENCY TELEPHONE NUMBERS FOR THE CITY OF BRENTWOOD DEPARTMENT OF PUBLIC WORKS, AMBULANCE, POLICE DEPARTMENT THE FIRE DISTRICT AND ECCID AT THE JOB SITE.

14. THE CONTRACTOR SHALL PROVIDE ALL LIGHTS, SIGNS, BARRICADES, FLAG MEN, OR OTHER DEVICES NECESSARY TO PROVIDE FOR PUBLIC SAFETY AND TO MAINTAIN TRAFFIC CONTROL AT ALL TIMES.

15. THE TERM "CITY ENGINEER" SHALL MEAN THE CITY ENGINEER OF THE CITY OF BRENTWOOD OR HIS AUTHORIZED REPRESENTATIVE.

16. NO WORK WHATSOEVER SHALL BE STARTED WITHOUT FIRST NOTIFYING THE CITY ENGINEER, ENGINEER, SOILS ENGINEER AND APPROPRIATE PUBLIC AGENCIES TWO WORKING DAYS PRIOR TO COMMENCEMENT OF WORK.

17. WORK HOURS SHALL BE LIMITED FROM 7:00 A.M. TO 3:30 P.M., MONDAY THROUGH FRIDAY. DEVELOPER MUST SUBMIT A WRITTEN REQUEST FOR APPROVAL BY THE CITY ENGINEER AT LEAST TWO WORKING DAYS IN ADVANCE TO WORK DURING ANY AFTER-HOURS, WEEKENDS, OR HOLIDAYS.

18. THE CONTRACTOR SHALL PROVIDE FOR INGRESS AND EGRESS FOR ANY PRIVATE PROPERTY ADJACENT TO THE WORK AREA THROUGHOUT THE PERIOD OF CONSTRUCTION.

19. ENCROACHMENT PERMITS REQUIRED FOR WORK WITHIN EXISTING PUBLIC RIGHTS OF WAY SHALL BE OBTAINED BY THE CONTRACTOR PRIOR TO STARTING WORK. APPROVAL OF THESE PLANS IS ONLY FOR WORK WITHIN THE JURISDICTION OF THE CITY OF BRENTWOOD.

20. OBSTRUCTIONS INDICATED ARE FOR INFORMATION ONLY. IT IS THE CONTRACTOR'S RESPONSIBILITY TO VERIFY THE LOCATION AND DEPTH WITH THE APPROPRIATE AGENCIES. THE CONTRACTOR SHALL NOTIFY UNDERGROUND SERVICE ALERT (U.S.A.) FOR UTILITY LOCATIONS PRIOR TO ANY CONSTRUCTION. PHONE 1(800)642-2444. NEITHER THE OWNER NOR THE ENGINEER ASSUMES RESPONSIBILITY THAT THE OBSTRUCTIONS INDICATED WILL BE THE OBSTRUCTIONS ENCOUNTERED.

21. THE CONTRACTOR SHALL NOT DESTROY ANY PERMANENT SURVEY POINTS WITHOUT THE CONSENT OF THE CITY ENGINEER. ANY PERMANENT MONUMENT OR POINTS DESTROYED SHALL BE REPLACED BY A REGISTERED ENGINEER OR LICENSED SURVEYOR AT THE CONTRACTOR'S EXPENSE.

22 ALL UNDERGROUND FACILITIES SHALL BE INSTALLED PRIOR TO THE FINAL PREPARATION OF SUBGRADE, AND PLACEMENT OF BASE MATERIAL.

23. CONTRACTOR SHALL BE RESPONSIBLE FOR REQUIRED INSPECTIONS AND SHALL MAKE THE (TWO WORKING DAYS) NOTIFICATION TO THE CITY, ENGINEER, SOILS ENGINEER, OR OTHER REQUIRED INDIVIDUALS OR PUBLIC AGENCIES.

24. THE OWNER'S ENGINEER WILL PROVIDE THE CONSTRUCTION STAKES. THE NUMBER AND LOCATION OF STAKES REQUIRED SHALL BE DETERMINED BEFORE THE CONSTRUCTION BEGINS. ALL STAKING REQUESTS SHALL BE DIRECTED TO THE ENGINEER A MINIMUM OF 48 HOURS PRIOR TO ACTUAL NEED. ANY ADDITIONAL STAKING OR RESTAKING WILL ONLY BE DONE AS DIRECTED AND AUTHORIZED BY THE OWNER OR HIS AUTHORIZED AGENT. THE CITY ENGINEER HAS THE AUTHORITY TO REQUIRE THE OWNER OR HIS AUTHORIZED AGENT TO PLACE ADDITIONAL STAKES OR RESTAKES AS HE DEEMS NECESSARY FOR PROPER CONSTRUCTION OR TO AVOID CONFLICTS. ALL CONSTRUCTION STAKING SHALL BE DONE BY A REGISTERED CIVIL ENGINEER OR LICENSED LAND SURVEYOR.

25. ALL EXISTING ELEVATIONS SHOWN ARE AS MEASURED IN THE FIELD UNLESS OTHERWISE NOTED.

26. IT SHALL BE THE RESPONSIBILITY OF THE CONTRACTOR TO COORDINATE ALL NECESSARY UTILITY RELOCATIONS WITH THE APPROPRIATE UTILITY COMPANIES.

27. THE CONTRACTOR SHALL EXPOSE AND CHECK INVERTS ON EXISTING SEWERS AND CLEARANCE OF KNOWN CROSSINGS OF OTHER UTILITIES BEFORE CONSTRUCTING NEW PIPELINES. ANY DISCREPANCY BETWEEN THE PLANS AND FIELD INFORMATION SHALL BE REPORTED IMMEDIATELY TO THE ENGINEER.

28. CONTRACTOR SHALL COORDINATE SANITARY SEWER, STORM DRAIN AND WATER CONSTRUCTION IN A MANNER TO PREVENT ANY CONFLICTS WHERE UTILITY LINES CROSS EACH OTHER.

29. ALL CURB DATA REFERS TO "FACE OF CURB", AND STATIONING REFERS TO THE INDICATED CENTERLINE.

30. IT SHALL BE THE CONTRACTOR'S RESPONSIBILITY TO NOTIFY THE ENGINEER OF ANY DIFFERENCES IN LOCATION OF EXISTING UTILITIES FROM THAT SHOWN, OR OF ANY CONFLICTS WITH THE DESIGN BEFORE CONTINUING WITH WORK IN THAT AREA.

31. IT SHALL BE THE CONTRACTOR'S RESPONSIBILITY TO PROTECT IN PLACE (BY ANY MEANS NECESSARY) ALL EXISTING UTILITIES UNLESS OTHERWISE SPECIFIED ON THESE PLANS OR AS DIRECTED BY THE ENGINEER.

32. EXISTING CURBS, SIDEWALKS AND UTILITIES WITHIN OR ADJACENT TO THE PROJECT LIMITS THAT ARE DAMAGED OR DISPLACED, EVEN THOUGH THEY WERE NOT TO BE REMOVED, SHALL BE REPAIRED OR REPLACED EVEN IF DAMAGE OR DISPLACEMENT OCCURRED PRIOR TO ANY WORK PERFORMED BY THE CONTRACTOR.

33. THE ENGINEER ASSUMES NO RESPONSIBILITY FOR FINAL GRADE OF CONCRETE UNLESS FORMS ARE CHECKED PRIOR TO POURING.

34. ALL SANITARY SEWER AND STORM DRAIN CONSTRUCTION SHALL PROCEED FROM THE DOWNSTREAM CONNECTION TO THE UPSTREAM TERMINUS.

35. SUBGRADE SHALL BE BROUGHT TO FINAL GRADE PRIOR TO INSTALLATION OF WATER MAIN.

36. THE ROADWAY STRUCTURAL SECTIONS SHOWN ARE BASED UPON A PRELIMINARY "R" VALUE. THE CITY ENGINEER WILL APPROVE ROADWAY SECTIONS BASED ON A SOIL TEST FOR "R" VALUE. THE SOILS ENGINEER SHALL PERFORM "R" VALUE TESTS AT LOCATIONS SPECIFIED BY THE CITY ENGINEER UPON COMPLETION OF THE ROUGH SUBGRADE IN ORDER TO VERIFY PAVEMENT SECTION DESIGN.

37. ALL PAVEMENT EDGES SHOULD HAVE A REDWOOD HEADER PER CITY OF BRENTWOOD STD 9-8.

38. THE CONTRACTOR SHALL INSTALL BLUE REFLECTIVE MARKERS 4' OFF THE STREET CENTERLINE OPPOSITE EACH FIRE HYDRANT.

39. MANHOLE, VALVE AND METER BOX RIM ELEVATIONS, IF SHOWN, ARE APPROXIMATE ONLY. THE CONTRACTOR SHALL BE RESPONSIBLE FOR ADJUSTING THE RIMS AND COVERS TO THE FINISHED PAVEMENT GRADE. IN UNIMPROVED STREETS, THE RIMS SHALL BE SET AT THE ELEVATION SHOWN.

40. ALL SANITARY SEWER LATERALS AND CLEANOUTS SHALL BE PER CITY STANDARD SS-2 8-8.

41. ALL DEAD-END WATER MAINS SHALL BE PROVIDED WITH A STANDARD BLOW-OFF ASSEMBLY PER STANDARD DRAWING W-5. USE A 2" BLOW-OFF ON MAINS 12" OR SMALLER AND A 4" BLOW-OFF ON MAINS LARGER THAN 12".

42. CONCRETE ANCHORS OR THRUST BLOCKS SHALL BE PROVIDED AT ALL BENDS, VALVES AND BEHIND ALL TEES, FIRE HYDRANTS AND CROSSES, PER STANDARD DRAWING 7-2.

43. CONTRACTOR SHALL SUBMIT A TRAFFIC CONTROL PLAN TO THE CITY ENGINEER AND RECEIVE APPROVAL PRIOR TO THE START OF ANY WORK WITHIN A PUBLIC RIGHT-OF-WAY. THE PLAN SHOULD INCLUDE ALL REQUIRED TEMPORARY SIGNING AND DETAIL REQUIRING THE CLOSING OF MINNESOTA AVENUE.

44. THE EROSION CONTROL MEASURES SHOWN SHALL BE IN PLACE WHILE PERFORMING ANY WORK SHOWN ON THESE PLANS BETWEEN OCTOBER 15TH AND APRIL 15TH.

45. GRADES OF FUTURE OR UNIMPROVED STREETS ARE NOT APPROVED BY THESE PLANS.

46. ALL DRIVEWAYS SHALL BE 16' WIDE UNLESS OTHERWISE NOTED.

47. WHEN WIDENING THE PAVEMENT ON AN EXISTING ROAD, THE EXISTING PAVEMENT SHALL BE SAW-CUT TO A NEAT LINE AND REMOVED BACK TO AN EXISTING ADEQUATE STRUCTURAL SECTION. AN EXPLORATORY TRENCH, OR POTHOLING, MAY BE REQUIRED TO DETERMINE THE LIMITS OF PAVEMENT REMOVAL. CONFORM PAVEMENT PER CITY STANDARDS.

48. SIGNING AND STRIPING SHALL BE DONE IN ACCORDANCE WITH CALTRANS SPECIFICATIONS, STANDARD PLANS AND TRAFFIC MANUAL.

49. ALL "CAT-TRACKING" SHALL BE APPROVED BY THE CITY ENGINEER PRIOR TO ANY PERMANENT STRIPING BEING PLACED.

50. WHERE ROADWAY OPENING OCCURS ADJACENT TO EXISTING RESIDENTIAL HOMES, THE CONTRACTOR SHALL PROVIDE A SMOOTH CONFORM FROM THE NEW EDGE OF PAVEMENT TO MATCH THE SURFACE OF THE EXISTING DRIVEWAY. CONFORMING SHALL INCLUDE, BUT NOT BE LIMITED TO, PROVIDING PAVEMENT APRON, SAW CUTTING EXISTING PAVED DRIVEWAYS, REMOVING EXISTING DRAINAGE CULVERTS THAT ARE NO LONGER REQUIRED, GRADING THE SWALE AS SHOWN PER PLAN, TREE REMOVAL, MAILBOX AND FENCE RELOCATION AND RELOCATION OF UTILITY METERS OR BOXES. THE CONTRACTOR SHALL ALSO PROVIDE A SMOOTH GRADED CONFORM TO EXISTING ALL NEW LOTS SHALL BE PROVIDED WITH TWO THROUGH-THE-CURB PRIVATE APPROACHES TO ORCHARDS, ETC.

51. DRAINS PER STD ST-11. ON LOTS WITH 16' DRIVEWAYS, LOCATE DRAINS 3' OFF EACH PROPERTY LINE.

52. FOR STREET LIGHT DETAIL SEE PLANS PREPARED BY PRECISION PLANNING.

53. LOT LINE EXTENSIONS SHALL BE CLEARLY MARKED WITH AN "X" CHISELED IN THE CONCRETE AT THE TOP OF CURB.

54. SEWER MANHOLES SHALL BE VACUUM TESTED. △ PER NOTES SHEET 2

55. CONSTRUCTION MATERIALS

A. STORM DRAIN PIPE 12" TO 24" IN DIAMETER SHALL BE REINFORCED CONCRETE PIPE (SEE PROFILES FOR CLASS RATINGS). ALL STORM DRAIN PIPE LARGER THAN 24" IN DIAMETER CAN BE CAST IN PLACE PIPE WITH 1-1/2 POUNDS OF FIBRILLATED POLYPROPYLENE FIBERS (2" MINIMUM LENGTH) PER CUBIC YARD OF CONCRETE UNLESS OTHERWISE NOTED.
B. ALL STORM DRAIN PLUGS SHALL BE BRICK AND MORTAR PER DETAIL ON SHEET 41.
C. GRAVITY SANITARY SEWERS SHALL BE CONSTRUCTED OF PVC PIPE MEETING THE ASTM D-3034, SDR-35 CLASSIFICATION PER APPROVAL BY THE CITY ENGINEER UNLESS OTHERWISE NOTED.
D. WATER MAINS 12" AND SMALLER SHALL BE PVC AWWA C-900 CLASS 200. WATER MAIN 20" SHALL BE PVC AWWA C-905 CLASS 200.
E. WATER SERVICES SHALL BE 1" IN DIAMETER, TYPE K COPPER AND SHALL HAVE 60" MINIMUM COVER. WATER SERVICES SHALL BE PROVIDED WITH CATHODIC PROTECTION SYSTEM PER STD W-18. WATER SERVICES SHALL MAINTAIN 5' OF COVER TO CROSS UNDER FUTURE JOINT TRENCH.
F. IRRIGATION LINES 16" AND SMALLER SHALL BE PVC AWWA C-900 CLASS 200. IRRIGATION LINES 30" SHALL BE RCP. IRRIGATION LINES 42" SHALL BE RCP. FOR MANHOLES AND FITTINGS DESCRIPTIONS, SEE SHEET 32.

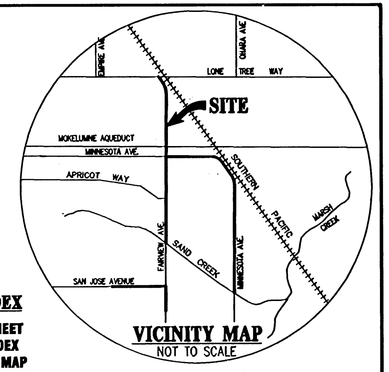

VICINITY MAP
NOT TO SCALE

SHEET INDEX

1 COVER SHEET
2 SHEET INDEX
3 SYSTEMS MAP
4 SYSTEMS MAP
5 TYPICAL STREET SECTIONS, LEGEND, ABBREVIATIONS
6 PLAN & PROFILE MINNESOTA AVE (0+00 - 11+00)
7 PLAN & PROFILE MINNESOTA AVE (11+00 - 22+00)
8 PLAN & PROFILE MINNESOTA AVE (22+00 - 33+00)
9 PLAN & PROFILE MINNESOTA AVE (33+00 - 44+00)
10 PLAN & PROFILE MINNESOTA AVE (44+00 - 55+00)
11 PLAN & PROFILE MINNESOTA AVE (55+00 - 66+00)
12 PLAN & PROFILE MINNESOTA AVE (66+00 - 77+00)
13 PLAN & PROFILE FAIRVIEW AVE (42+00 - 53+00)
14 PLAN & PROFILE FAIRVIEW AVE (53+00 - 64+00)
15 PLAN & PROFILE FAIRVIEW AVE (64+00 - 75+00)
16 PLAN & PROFILE FAIRVIEW AVE (75+00 - 86+00)
17 PLAN & PROFILE FAIRVIEW AVE (86+00 - 97+00)
18 PLAN & PROFILE FAIRVIEW AVE (97+00 - 108+00)
19 PLAN & PROFILE STORM DRAIN AND SANITARY SEWER
20 PLAN & PROFILE STORM DRAIN AND SANITARY SEWER
21 PLAN & PROFILE STORM DRAIN AND SANITARY SEWER
22 PLAN & PROFILE STORM DRAIN AND SANITARY SEWER
23 PLAN & PROFILE STORM DRAIN AND SANITARY SEWER
24 PLAN & PROFILE STORM DRAIN AND SANITARY SEWER
25 PLAN & PROFILE STORM DRAIN AND SANITARY SEWER
26 PLAN & PROFILE STORM DRAIN AND SANITARY SEWER
27 PLAN & PROFILE STORM DRAIN
28 PLAN & PROFILE STORM DRAIN
29 PLAN & PROFILE IRRIGATION LINE
30 PLAN & PROFILE 12" WATER MAIN
31 PLAN & PROFILE 12" WATER MAIN
32 PLAN AND PROFILE IRRIGATION LINE IN SAND CREEK ROAD
33 PLAN AND PROFILE IRRIGATION LINE IN SAND CREEK ROAD
34 PLAN AND PROFILE IRRIGATION LINE IN SAND CREEK ROAD
35 PLAN AND PROFILE IRRIGATION LINE IN SAND CREEK ROAD
36 PLAN AND PROFILE SAND CREEK ROAD
37 PLAN AND PROFILE IRRIGATION LINE
38 PLAN AND PROFILE IRRIGATION LINE
39 PLAN AND PROFILE IRRIGATION LINE
40 PLAN & PROFILE FAIRVIEW AVE (18+00 - 29+00)
41 PLAN & PROFILE SAN JOSE AVE (0+00 - 11+00)
42 PLAN & PROFILE SAN JOSE AVE (11+00 - 22+00)
43 DETAILS
44 PROFILES
45 SIGNING AND STRIPING PLAN - MINNESOTA AVENUE
46 SIGNING AND STRIPING PLAN - FAIRVIEW AVENUE
S-1 STRUCTURAL PLAN S-4 STRUCTURAL PLAN
S-2 STRUCTURAL PLAN
S-3 STRUCTURAL PLAN

SHEETS 1-5,6-8,21,26,AND 32-35 ARE APPROVED FOR ECCID IMPROVEMENTS ONLY AND DOES NOT CONSTITUTE APPROVAL OR ACCEPTANCE OF ANY DESIGN.
LARRY PRESTON DATE 7/19/98
GENERAL MANGER

SHEETS 1-5, 6 (ECCID ONLY), 7 (ECCID ONLY), 8 (ECCID ONLY), 19-28, 30-35, 43, S-1- S-3 HAVE BEEN REVIEWED FOR CONFORMANCE WITH THE CITY OF BRENTWOOD STANDARDS AND REQUIREMENTS. APPROVAL FOR CONSTRUCTION IS SUBJECT TO THE INFORMATION SHOWN HEREIN. THE CITY OF BRENTWOOD AND THE UNDERSIGNED ARE NOT RESPONSIBLE FOR ANY ERRORS OR OMISSIONS THAT MAY EXIST ON THESE PLANS.
JOHN E. STEVENSON, CITY ENGINEER DATE July 20, 98
R.C.E. No. 22446 EXPIRES 9-30-01

SHEETS 29 AND 37-39
APPROVED FOR ECCID IMPROVEMENTS ONLY AND DOES NOT CONSTITUTE APPROVAL OR ACCEPTANCE OF ANY DESIGN.
LARRY PRESTON DATE 9/2/98
GENERAL MANGER

REVIEWED FOR CONFORMANCE WITH CITY OF BRENTWOOD STANDARDS AND REQUIREMENTS. APPROVAL FOR CONSTRUCTION IS SUBJECT TO THE INFORMATION SHOWN HEREIN. THE CITY OF BRENTWOOD AND THE UNDERSIGNED ARE NOT RESPONSIBLE FOR ANY ERRORS OR OMISSIONS THAT MAY EXIST ON THESE PLANS. SHEET 45 & 46 ARE EXCLUDED FROM APPROVAL
JOHN E. STEVENSON, CITY ENGINEER DATE 9/4/98
R.C.E. No. 22446 EXPIRES 9-30-01

TRAFFIC ENGINEER	DATE	POLICE DEPT.	DATE	MAINTENANCE DEPT.	DATE	ECCID	DATE	FIRE DEPT.	DATE

BRENTWOOD
ENGINEERING DEPARTMENT
708 THIRD STREET, BRENTWOOD, CA 94513

cbg Carlson, Barbee & Gibson, Inc.
CIVIL ENGINEERS • SURVEYORS • PLANNERS
2000 CROW CANYON PLACE, SUITE 250 SAN RAMON, CALIFORNIA 94583
TEL (925) 866-0322 FAX (925) 866-8575

IMPROVEMENT PLAN
AD 98-2/CIFP 98-1
COVER SHEET
BRENTWOOD CALIFORNIA

NO.	REVISIONS	BY	APP	DATE
1	REVISED NOTE 54.	TER		8/24/98

DESIGNED UNDER THE DIRECTION OF: KENNETH R. TAPPIN DATE 7-17-98
R.C.E. No. 52845 REGISTRATION EXPIRES 12-31-98
DESIGN: TER DATE: 5-8-98
DRAWN: JOB DATE: 5-8-98
CHECKED: KRT DATE: 5-8-98

REGISTERED PROFESSIONAL ENGINEER — KENNETH R. TAPPIN — 52845 EXP. 12/31/98 — CIVIL — STATE OF CALIFORNIA

SHEET 1 OF 50 SHEETS

6/21/00 AS BUILT
CIP 98-0720

F:\94463\ACAD\PHASE3\UP\UP01
JOB NO. 94463-30

CIP 98-0720
Improvement Plans
Special Planning Area 'L' Cover Sheet

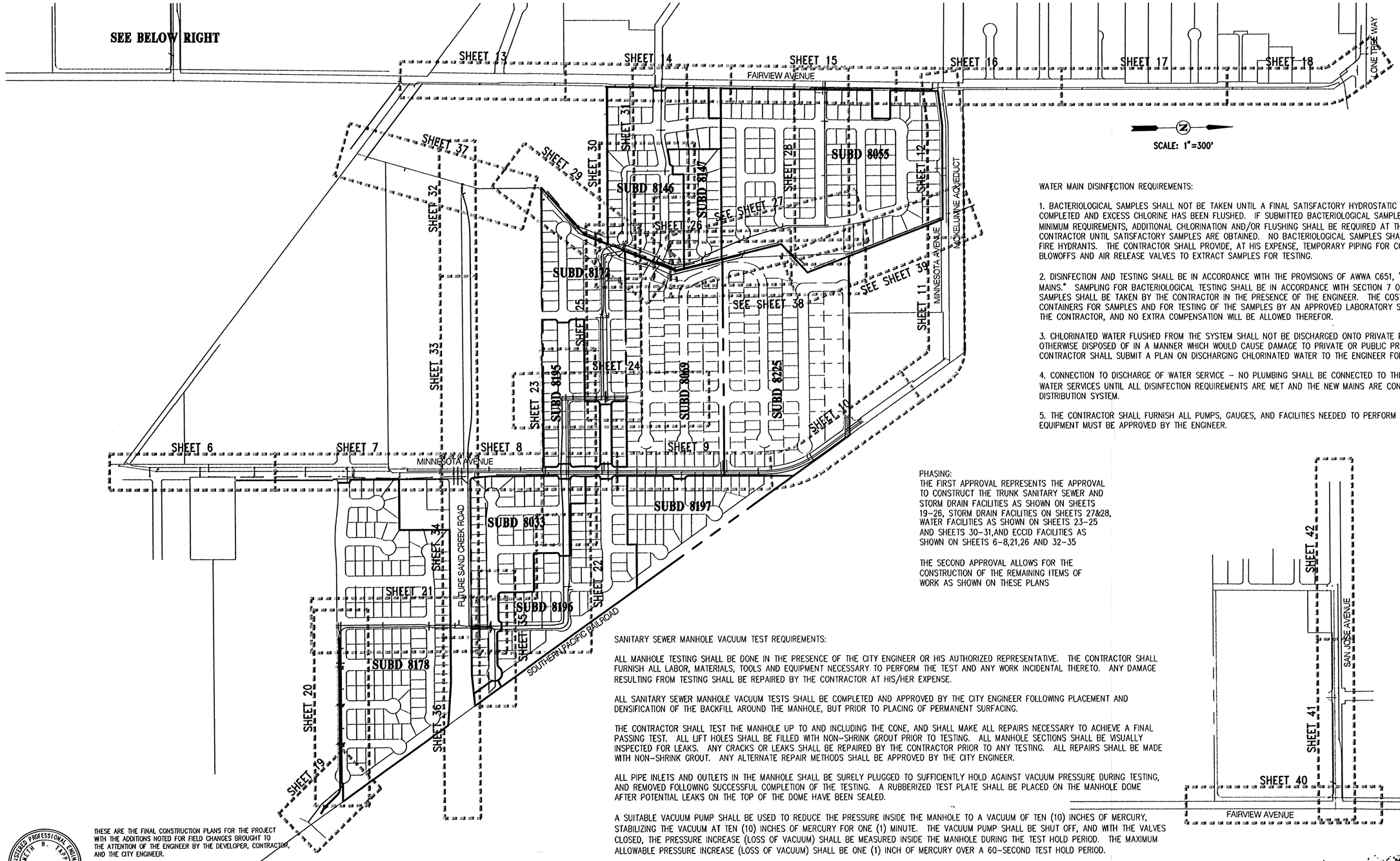

SCALE: 1"=300'

WATER MAIN DISINFECTION REQUIREMENTS:

1. BACTERIOLOGICAL SAMPLES SHALL NOT BE TAKEN UNTIL A FINAL SATISFACTORY HYDROSTATIC LEAKAGE TEST IS COMPLETED AND EXCESS CHLORINE HAS BEEN FLUSHED. IF SUBMITTED BACTERIOLOGICAL SAMPLES FAIL TO SATISFY MINIMUM REQUIREMENTS, ADDITIONAL CHLORINATION AND/OR FLUSHING SHALL BE REQUIRED AT THE EXPENSE OF THE CONTRACTOR UNTIL SATISFACTORY SAMPLES ARE OBTAINED. NO BACTERIOLOGICAL SAMPLES SHALL BE TAKEN FROM FIRE HYDRANTS. THE CONTRACTOR SHALL PROVIDE, AT HIS EXPENSE, TEMPORARY PIPING FOR CONNECTION TO BLOWOFFS AND AIR RELEASE VALVES TO EXTRACT SAMPLES FOR TESTING.

2. DISINFECTION AND TESTING SHALL BE IN ACCORDANCE WITH THE PROVISIONS OF AWWA C651, "DISINFECTING WATER MAINS." SAMPLING FOR BACTERIOLOGICAL TESTING SHALL BE IN ACCORDANCE WITH SECTION 7 OF AWWA C651. SAMPLES SHALL BE TAKEN BY THE CONTRACTOR IN THE PRESENCE OF THE ENGINEER. THE COST OF FURNISHING CONTAINERS FOR SAMPLES AND FOR TESTING OF THE SAMPLES BY AN APPROVED LABORATORY SHALL BE BORNE BY THE CONTRACTOR, AND NO EXTRA COMPENSATION WILL BE ALLOWED THEREFOR.

3. CHLORINATED WATER FLUSHED FROM THE SYSTEM SHALL NOT BE DISCHARGED ONTO PRIVATE PROPERTY OR OTHERWISE DISPOSED OF IN A MANNER WHICH WOULD CAUSE DAMAGE TO PRIVATE OR PUBLIC PROPERTY. THE CONTRACTOR SHALL SUBMIT A PLAN ON DISCHARGING CHLORINATED WATER TO THE ENGINEER FOR APPROVAL.

4. CONNECTION TO DISCHARGE OF WATER SERVICE – NO PLUMBING SHALL BE CONNECTED TO THE DISCHARGE SIDE OF WATER SERVICES UNTIL ALL DISINFECTION REQUIREMENTS ARE MET AND THE NEW MAINS ARE CONNECTED TO THE CITY'S DISTRIBUTION SYSTEM.

5. THE CONTRACTOR SHALL FURNISH ALL PUMPS, GAUGES, AND FACILITIES NEEDED TO PERFORM THE TESTS. ALL EQUIPMENT MUST BE APPROVED BY THE ENGINEER.

PHASING:
THE FIRST APPROVAL REPRESENTS THE APPROVAL TO CONSTRUCT THE TRUNK SANITARY SEWER AND STORM DRAIN FACILITIES AS SHOWN ON SHEETS 19–26, STORM DRAIN FACILITIES ON SHEETS 27&28, WATER FACILITIES AS SHOWN ON SHEETS 23–25 AND SHEETS 30–31,AND ECCID FACILITIES AS SHOWN ON SHEETS 6–8,21,26 AND 32–35

THE SECOND APPROVAL ALLOWS FOR THE CONSTRUCTION OF THE REMAINING ITEMS OF WORK AS SHOWN ON THESE PLANS

SANITARY SEWER MANHOLE VACUUM TEST REQUIREMENTS:

ALL MANHOLE TESTING SHALL BE DONE IN THE PRESENCE OF THE CITY ENGINEER OR HIS AUTHORIZED REPRESENTATIVE. THE CONTRACTOR SHALL FURNISH ALL LABOR, MATERIALS, TOOLS AND EQUIPMENT NECESSARY TO PERFORM THE TEST AND ANY WORK INCIDENTAL THERETO. ANY DAMAGE RESULTING FROM TESTING SHALL BE REPAIRED BY THE CONTRACTOR AT HIS/HER EXPENSE.

ALL SANITARY SEWER MANHOLE VACUUM TESTS SHALL BE COMPLETED AND APPROVED BY THE CITY ENGINEER FOLLOWING PLACEMENT AND DENSIFICATION OF THE BACKFILL AROUND THE MANHOLE, BUT PRIOR TO PLACING OF PERMANENT SURFACING.

THE CONTRACTOR SHALL TEST THE MANHOLE UP TO AND INCLUDING THE CONE, AND SHALL MAKE ALL REPAIRS NECESSARY TO ACHIEVE A FINAL PASSING TEST. ALL LIFT HOLES SHALL BE FILLED WITH NON–SHRINK GROUT PRIOR TO TESTING. ALL MANHOLE SECTIONS SHALL BE VISUALLY INSPECTED FOR LEAKS. ANY CRACKS OR LEAKS SHALL BE REPAIRED BY THE CONTRACTOR PRIOR TO ANY TESTING. ALL REPAIRS SHALL BE MADE WITH NON–SHRINK GROUT. ANY ALTERNATE REPAIR METHODS SHALL BE APPROVED BY THE CITY ENGINEER.

ALL PIPE INLETS AND OUTLETS IN THE MANHOLE SHALL BE SURELY PLUGGED TO SUFFICIENTLY HOLD AGAINST VACUUM PRESSURE DURING TESTING, AND REMOVED FOLLOWING SUCCESSFUL COMPLETION OF THE TESTING. A RUBBERIZED TEST PLATE SHALL BE PLACED ON THE MANHOLE DOME AFTER POTENTIAL LEAKS ON THE TOP OF THE DOME HAVE BEEN SEALED.

A SUITABLE VACUUM PUMP SHALL BE USED TO REDUCE THE PRESSURE INSIDE THE MANHOLE TO A VACUUM OF TEN (10) INCHES OF MERCURY, STABILIZING THE VACUUM AT TEN (10) INCHES OF MERCURY FOR ONE (1) MINUTE. THE VACUUM PUMP SHALL BE SHUT OFF, AND WITH THE VALVES CLOSED, THE PRESSURE INCREASE (LOSS OF VACUUM) SHALL BE MEASURED INSIDE THE MANHOLE DURING THE TEST HOLD PERIOD. THE MAXIMUM ALLOWABLE PRESSURE INCREASE (LOSS OF VACUUM) SHALL BE ONE (1) INCH OF MERCURY OVER A 60–SECOND TEST HOLD PERIOD.

IF THE VACUUM DROPS BELOW NINE (9) INCHES OF MERCURY WITHIN THE TEST PERIOD, THE LEAKAGE SHALL BE CONSIDERED EXCESSIVE. THE CONTRACTOR SHALL MAKE ALL REPAIRS NECESSARY TO ACHIEVE A PASSING TEST AND THE MANHOLE SHALL BE RETESTED. MANHOLE REPAIRS AND RETESTING SHALL PROCEED UNTIL A PASSING TEST IS COMPLETED.

REGISTERED PROFESSIONAL ENGINEER — KENNETH R. TAPPIN — 52845 EXP.12/31/02 — CIVIL — STATE OF CALIFORNIA

THESE ARE THE FINAL CONSTRUCTION PLANS FOR THE PROJECT WITH THE ADDITIONS NOTED FOR FIELD CHANGES BROUGHT TO THE ATTENTION OF THE ENGINEER BY THE DEVELOPER, CONTRACTOR, AND THE CITY ENGINEER.

KENNETH R. TAPPIN RCE 52845 — EXP. 12/31/02

8-30-2000
DATE

CIP 98-0720
Improvement Plan
Special Planning Area "L" Sheet Index

BRENTWOOD
ENGINEERING DEPARTMENT
708 THIRD STREET, BRENTWOOD, CA 94513

cbg Carlson, Barbee & Gibson, Inc.
CIVIL ENGINEERS • SURVEYORS • PLANNERS
2000 CROW CANYON PLACE, SUITE 250 — SAN RAMON, CALIFORNIA 94583
TEL (925) 866-0322 — FAX (925) 866-8575

IMPROVEMENT PLAN
AD 98-2/CIFP 98-1

SHEET INDEX

BRENTWOOD — CALIFORNIA

NO.	REVISIONS	BY	APP	DATE

DESIGNED UNDER THE DIRECTION OF:
KENNETH R. TAPPIN — DATE 9-3-98
R.C.E. No. 52845 REGISTRATION EXPIRES 12-31-98
DESIGN: TER — DATE: 5-8-98
DRAWN: JOB — DATE: 5-8-98
CHECKED: KRT — DATE: 5-8-98

REGISTERED PROFESSIONAL ENGINEER — KENNETH R. TAPPIN — 52845 EXP.12/31/98 — CIVIL — STATE OF CALIFORNIA

SHEET 2 OF 50 SHEETS

6/21/00 AS BUILT
CIP 98-0720

F:\94453\ACAD\PHASE30\PJP02
JOB NO. 94453-30

SCALE: 1"=200'

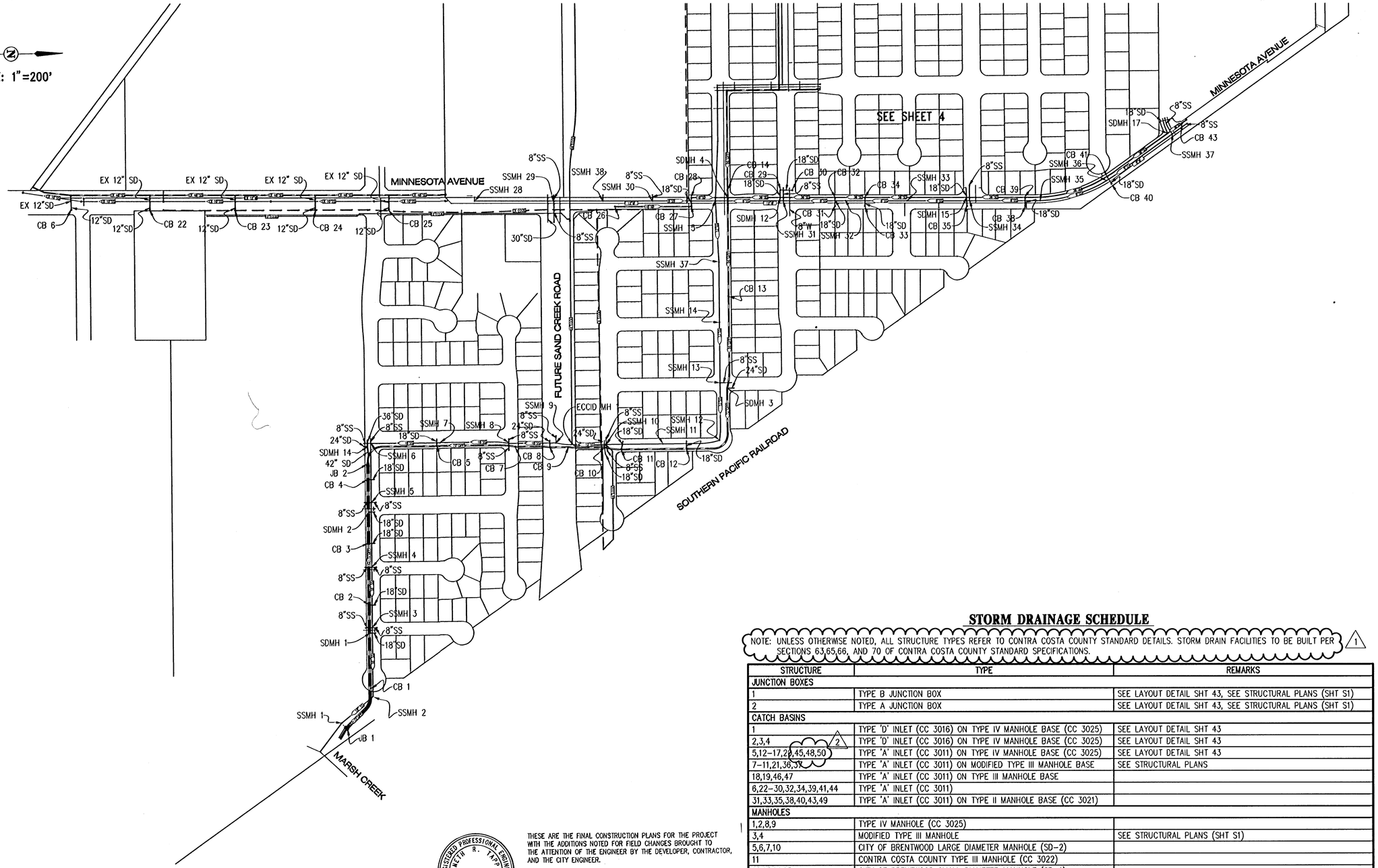

STORM DRAINAGE SCHEDULE

NOTE: UNLESS OTHERWISE NOTED, ALL STRUCTURE TYPES REFER TO CONTRA COSTA COUNTY STANDARD DETAILS. STORM DRAIN FACILITIES TO BE BUILT PER SECTIONS 63,65,66, AND 70 OF CONTRA COSTA COUNTY STANDARD SPECIFICATIONS. △1

STRUCTURE	TYPE	REMARKS
JUNCTION BOXES		
1	TYPE B JUNCTION BOX	SEE LAYOUT DETAIL SHT 43, SEE STRUCTURAL PLANS (SHT S1)
2	TYPE A JUNCTION BOX	SEE LAYOUT DETAIL SHT 43, SEE STRUCTURAL PLANS (SHT S1)
CATCH BASINS		
1	TYPE 'D' INLET (CC 3016) ON TYPE IV MANHOLE BASE (CC 3025)	SEE LAYOUT DETAIL SHT 43
2,3,4 △2	TYPE 'D' INLET (CC 3016) ON TYPE IV MANHOLE BASE (CC 3025)	SEE LAYOUT DETAIL SHT 43
5,12-17,20,45,48,50	TYPE 'A' INLET (CC 3011) ON TYPE IV MANHOLE BASE (CC 3025)	SEE LAYOUT DETAIL SHT 43
7-11,21,36,37	TYPE 'A' INLET (CC 3011) ON MODIFIED TYPE III MANHOLE BASE	SEE STRUCTURAL PLANS
18,19,46,47	TYPE 'A' INLET (CC 3011) ON TYPE III MANHOLE BASE	
6,22-30,32,34,39,41,44	TYPE 'A' INLET (CC 3011)	
31,33,35,38,40,43,49	TYPE 'A' INLET (CC 3011) ON TYPE II MANHOLE BASE (CC 3021)	
MANHOLES		
1,2,8,9	TYPE IV MANHOLE (CC 3025)	
3,4	MODIFIED TYPE III MANHOLE	SEE STRUCTURAL PLANS (SHT S1)
5,6,7,10	CITY OF BRENTWOOD LARGE DIAMETER MANHOLE (SD-2)	
11	CONTRA COSTA COUNTY TYPE III MANHOLE (CC 3022)	
12,13,14,15	CITY OF BRENTWOOD SMALL DIAMETER MANHOLE (SD-1)	

REGISTERED PROFESSIONAL ENGINEER — KENNETH R. TAPPIN — 52845 EXP.12/31/02 — CIVIL — STATE OF CALIFORNIA

THESE ARE THE FINAL CONSTRUCTION PLANS FOR THE PROJECT WITH THE ADDITIONS NOTED FOR FIELD CHANGES BROUGHT TO THE ATTENTION OF THE ENGINEER BY THE DEVELOPER, CONTRACTOR, AND THE CITY ENGINEER.

KENNETH R. TAPPIN RCE 52845 EXP. 12/31/02 — 8-30-2000 DATE

CIP 98-0720
Improvement Plan
Special Planning Area 1 - Systems
Map 1

BRENTWOOD
ENGINEERING DEPARTMENT
708 THIRD STREET, BRENTWOOD, CA 94513

cbg Carlson, Barbee & Gibson, Inc.
CIVIL ENGINEERS • SURVEYORS • PLANNERS
2000 CROW CANYON PLACE, SUITE 250, SAN RAMON, CALIFORNIA 94583
TEL (925) 866-0322 FAX (925) 866-8575

IMPROVEMENT PLAN — **AD 98-2/CIFP 98-1**

SYSTEMS MAP

BRENTWOOD — CALIFORNIA

NO.	REVISIONS	BY	APP	DATE
△1	REVISED NOTE FOR STORM DRAIN.	TER	[illegible]	8/24/98
△2	ADDED INLET 45 & 50	TER	[illegible]	10/12/98

DESIGNED UNDER THE DIRECTION OF: KENNETH R. TAPPIN, R.C.E. No. 52845 REGISTRATION EXPIRES 12-31-02 — 9-3-98 DATE

DESIGN: TER DATE: 4-13-99
DRAWN: JOB DATE: 4-13-99
CHECKED: KRT DATE: 4-13-99

REGISTERED PROFESSIONAL ENGINEER — KENNETH R. TAPPIN — 52845 EXP.12/31/02 — CIVIL — STATE OF CALIFORNIA

SHEET 3 OF 50 SHEETS

6/21/00 AS BUILT F:\94453\ACAD\PHASE3OU\PJP03
JOB NO. 94453-30
CIP 98-0720

THESE ARE THE FINAL CONSTRUCTION PLANS FOR THE PROJECT WITH THE ADDITIONS NOTED FOR FIELD CHANGES BROUGHT TO THE ATTENTION OF THE ENGINEER BY THE DEVELOPER, CONTRACTOR, AND THE CITY ENGINEER.

REGISTERED PROFESSIONAL ENGINEER KENNETH R. TAPPIN 52845 EXP.12/31/02 CIVIL STATE OF CALIFORNIA

KENNETH R. TAPPIN RCE 52845 EXP. 12/31/02 — DATE 8-30-2000

BRENTWOOD
ENGINEERING DEPARTMENT
708 THIRD STREET, BRENTWOOD, CA 94513

cbg Carlson, Barbee & Gibson, Inc.
CIVIL ENGINEERS • SURVEYORS • PLANNERS
2000 CROW CANYON PLACE, SUITE 250
SAN RAMON, CALIFORNIA 94583
TEL (925) 866-0322
FAX (925) 866-8575

IMPROVEMENT PLAN — **AD 98-2/CIFP 98-1**

SYSTEMS MAP

BRENTWOOD — **CALIFORNIA**

NO.	REVISIONS	BY	APP	DATE
1	REVISED ECCID PIPELINE	TER	RCG	8/24/98
2	REVISED STORM DRAIN LINE AT HOFFMAN & ADDED CB 45 & 50	TER	RCG	10/12/98

DESIGNED UNDER THE DIRECTION OF:
KENNETH R. TAPPIN — DATE 9-3-98
R.C.E. No. 52845 REGISTRATION EXPIRES 12-31-98

DESIGN: TER	DATE: 5-8-98
DRAWN: JOB	DATE: 5-8-98
CHECKED: KRT	DATE: 5-8-98

REGISTERED PROFESSIONAL ENGINEER KENNETH R. TAPPIN 52845 EXP.12/31/98 CIVIL STATE OF CALIFORNIA

SHEET 4 OF 50 SHEETS

6/21/00 AS BUILT

F:\94453\ACAD\PHASE30\IP\IP04
JOB NO. 94453-30

CIP 98-0720
Improvement Plan
Special Planning Area 1 - Systems
Map 2

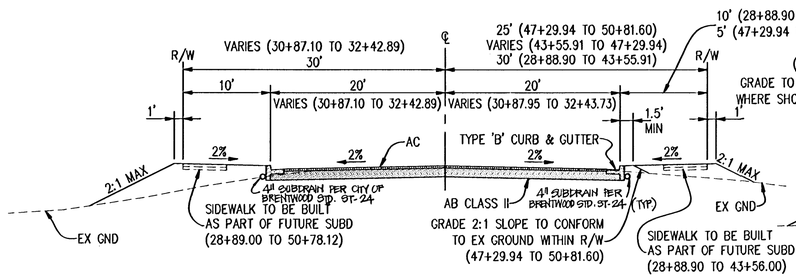

MINNESOTA AVENUE
NOT TO SCALE
STA 28+88.90 TO STA 50+81.60

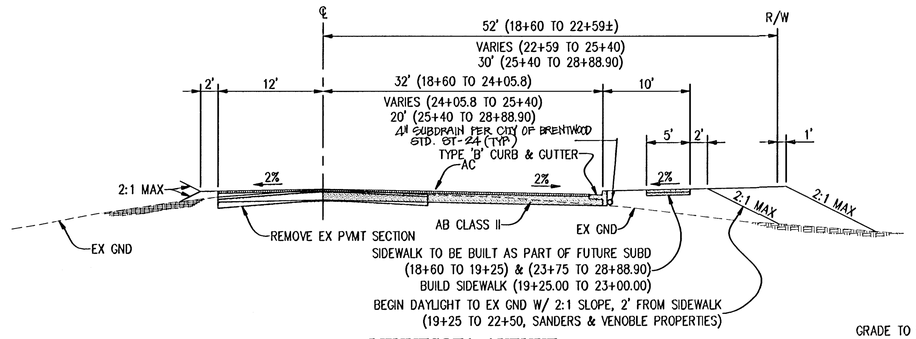

MINNESOTA AVENUE
NOT TO SCALE
STA 18+60.00 TO STA 28+88.90

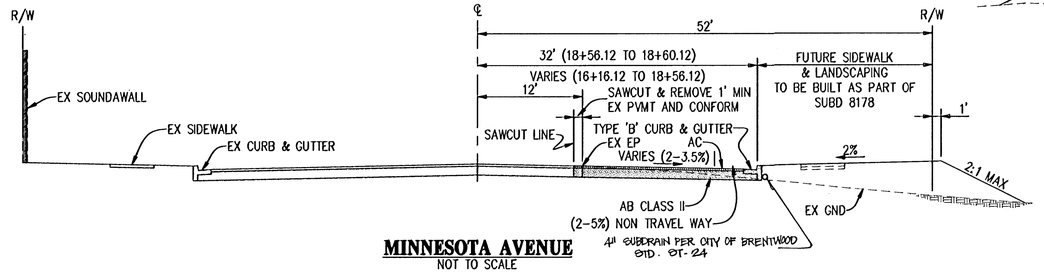

MINNESOTA AVENUE
NOT TO SCALE
STA 15+50.00 TO STA 18+60.00

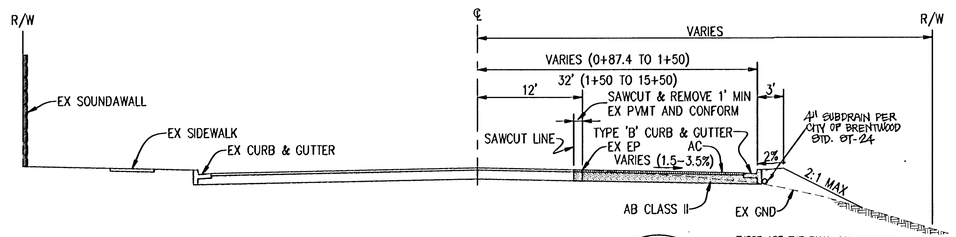

MINNESOTA AVENUE
NOT TO SCALE
STA 0+87.4 TO STA 15+50

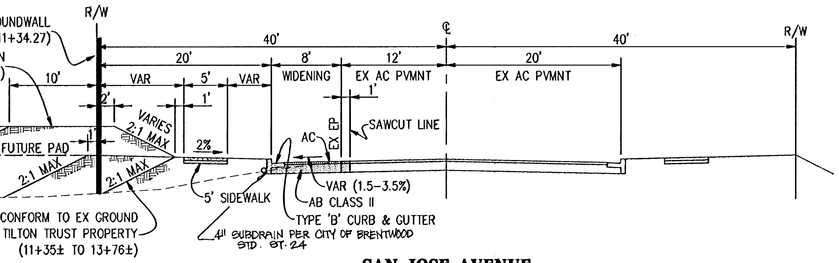

SAN JOSE AVENUE
NOT TO SCALE
STA 0+77.26 TO STA 13+76.37

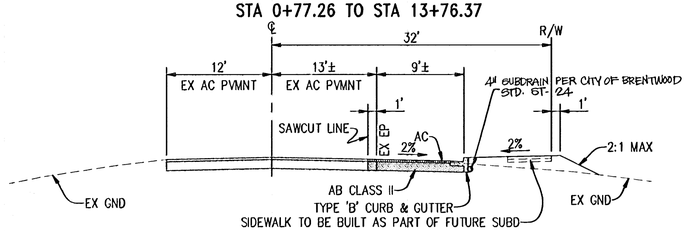

FAIRVIEW AVENUE
NOT TO SCALE
STA 54+75 TO STA 77+46.18

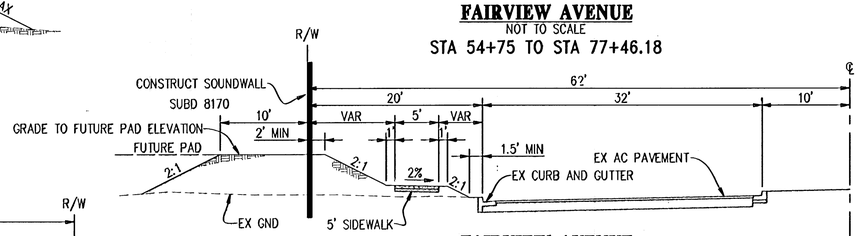

FAIRVIEW AVENUE
NOT TO SCALE
STA 18+95 TO STA 26+00

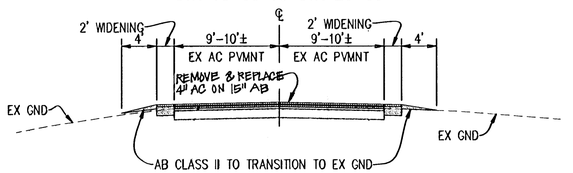

MINNESOTA AVENUE
NOT TO SCALE
STA 50+81.60 TO STA 67+10.00

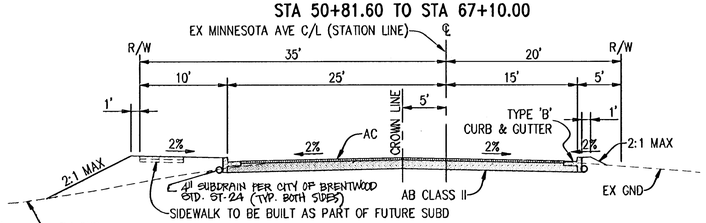

MINNESOTA AVENUE
NOT TO SCALE
STA 67+10.00 TO STA 75+62.17

LEGEND AND ABBREVIATIONS

EXISTING	PROPOSED	DESCRIPTION
		PROPERTY LINE
		CURB, GUTTER AND SIDEWALK
		CENTERLINE
SS	SS	SANITARY SEWER PIPE
○	●	SANITARY SEWER MANHOLE
○	●	SANITARY SEWER CLEANOUT
SD	SD	STORM DRAIN PIPE
○	●	STORM DRAIN MANHOLE
□	■	CURB INLET
⊠	⊠	FIELD INLET
W	W	WATER MAIN
		WATER SERVICE
	⋈	WATER VALVE
		FIRE HYDRANT
		BLOW OFF
E	E	ELECTRIC LINE
		ELECTROLIER
		POWER POLE
G	G	GAS MAIN
CATV	CATV	CABLE TELEVISION LINE
		STREET SIGN
		MONUMENT
		TREE AND TREE TO BE REMOVED
777	777	CONTOURS
x 777.0	x TC 777.70	SPOT ELEVATIONS

AB	AGGREGATE BASE	G	GAS	S	SLOPE
AC	ASPHALT CONCRETE	GA.	GAGE OR GAUGE	SD	STORM DRAIN
ARV	AIR RELEASE VALVE	GB	GRADE BREAK	SDMH	STORM DRAIN MANHOLE
BC	BEGIN CURVE	GND	GROUND	SHT	SHEET
BEG.	BEGIN	HC	HANDICAP	SS	SANITARY SEWER
BM	BENCHMARK	HP	HIGH POINT	SSMH	SANITARY SEWER MANHOLE
BVC	BEGIN VERTICAL CURVE	INV	INVERT	ST.	STREET
BW	BACK OF WALK	IRR.	IRRIGATION	STA	STATION
CB	CATCH BASIN	JT	JOINT TRENCH	STD	STANDARD
C&G	CURB & GUTTER	LF	LINEAL FEET	T	TELEPHONE
CI	CURB INLET	LP	LOW POINT	TC	TOP OF CURB
CO	CLEAN OUT	LT.	LEFT	TEMP.	TEMPORARY
CR	CURB RETURN	MAX.	MAXIMUM	TYP.	TYPICAL
CY	CUBIC YARD	MH	MANHOLE	VAR	VARIABLE
D/W	DRIVEWAY	MIN.	MINIMUM	VC	VERTICAL CURVE
E	ELECTRIC	OG	ORIGINAL GROUND	VERT.	VERTICAL
EA.	EACH	PI	POINT OF INTERSECTION	W	WATER LINE
EC	END CURVE	PL	PROPERTY LINE	W/	WITH
EL.	ELEVATION	PRC	POINT OF REVERSE CURVE	WM	WATER METER
EP	EDGE OF PAVEMENT	PUE	PUBLIC UTILITY EASEMENT	WS	WATER SERVICE
EVC	END VERTICAL CURVE	PVC	POLYVINYL CHLORIDE		
EX	EXISTING	PVMT	PAVEMENT		
FC	FACE OF CURB	R	RADIUS		
FF	FINISHED FLOOR	RIM	RIM ELEVATION		
FG	FINISHED GRADE	RT.	RIGHT		
FH	FIRE HYDRANT	R/W	RIGHT OF WAY		
FI	FIELD INLET				
FL	FLOW LINE				

PAVEMENT DESIGN CHART

STREET	TI	R	MIN. AC	MIN. AB
MINNESOTA AVENUE (SOUTH OF SAND CREEK ROAD)	9.0	5	5"	22"
MINNESOTA AVENUE (NORTH OF SAND CREEK ROAD)	7.0	5	4"	15"
FAIRVIEW AVENUE (NORTH OF SAND CREEK)	9.0	5	5"	22"
FAIRVIEW AVENUE (SOUTH OF SAN JOSE AVENUE)	9.0	5	5"	22"
SAN JOSE AVENUE	9.0	5	5"	22"

NOTE:
AC AND AB VALUES SHOWN ARE THE MINIMUM BASED ON THE CONDITIONS OF APPROVAL. FINAL STREET SECTIONS WILL BE DETERMINED AFTER THE FINAL 'R' VALUE TEST OF SUBGRADE IS COMPLETED BY THE SOILS ENGINEER. GEOTEXTILE FABRIC IS REQUIRED FOR 'R' VALUES LESS THAN 10.

REGISTERED PROFESSIONAL ENGINEER KENNETH R. TAPPIN 52845 EXP.12/31/02 CIVIL STATE OF CALIFORNIA

THESE ARE THE FINAL CONSTRUCTION PLANS FOR THE PROJECT WITH THE ADDITIONS NOTED FOR FIELD CHANGES BROUGHT TO THE ATTENTION OF THE ENGINEER BY THE DEVELOPER, CONTRACTOR, AND THE CITY ENGINEER.

KENNETH R. TAPPIN RCE 52845
EXP. 12/31/02

8-30-2000
DATE

CIP 98-0720
Improvement Plan
Special Planning Area 1: Typical Street Sections, Legend, Abbreviations

BRENTWOOD
ENGINEERING DEPARTMENT
708 THIRD STREET, BRENTWOOD, CA 94513

cbg Carlson, Barbee & Gibson, Inc.
CIVIL ENGINEERS • SURVEYORS • PLANNERS
2000 CROW CANYON PLACE, SUITE 250
SAN RAMON, CALIFORNIA 94583
TEL (925) 866-0322
FAX (925) 866-8575

IMPROVEMENT PLAN
AD 98-2/CIFP 98-1

TYPICAL STREET SECTIONS LEGEND, ABBREVIATIONS

BRENTWOOD CALIFORNIA

NO.	REVISIONS	BY	APP	DATE

DESIGNED UNDER THE DIRECTION OF:
KENNETH R. TAPPIN
R.C.E. No. 52845 REGISTRATION EXPIRES 12-31-98
9-3-98
DATE

DESIGN: TER DATE: 5-8-98
DRAWN: JOB DATE: 5-8-98
CHECKED: KRT DATE: 5-8-98

REGISTERED PROFESSIONAL ENGINEER KENNETH R. TAPPIN 52845 EXP.12/31/98 CIVIL STATE OF CALIFORNIA

SHEET 5 OF 50 SHEETS

6/21/00 AS BUILT
F:\94453\ACAD\PHASE3\UP\UP05
JOB NO. 94453-30
CIP 98-0720

LEGEND:

⊠ EXISTING TREE TO BE REMOVED

▒ PAVEMENT WIDENING

CURVE TABLE

NOTE: CURVE NUMBERS ARE SHOWN WITH 'O' ON PLAN.

CURVE	RADIUS	DELTA	LENGTH	DESCRIPTION
1	30.00'	89°31'00"	46.87'	FC
2	30.00'	90°29'00"	47.38'	FC

NOTE:

1. INSTALL 12 INCHES FRESNO IRRIGATION APPLIANCE 6x8 ORCHARD VALVE 24 FEET ON CENTER OR AS APPROVED BY PROPERTY OWNER.
2. EXISTING ECCID PIPES SHALL BE REMOVED.

MINNESOTA AVENUE

SCALE: 1" = 40'

EX CROWN	81.66	81.47	81.26	80.97	80.69	80.52	80.36
EX RT CROSS SLOPE(%)	1.25	3.10	4.99	3.98	2.95	2.77	2.74
EX RT EP	81.31	80.74	80.27	80.21	80.15	80.01	79.85
PROPOSED RT CROSS SLOPE(%)	2.8	2.0	2.7	3.0	3.6	3.4	3.1
PROPOSED RT TC	81.64	81.01	80.39	80.27	80.14	80.02	79.89

EX CROWN	80.67	80.81	80.96	81.02	80.99	80.95	80.86	80.77	80.64	80.58	80.63	80.68	80.80	80.91	81.04	81.17	81.17	81.29	81.30	81.13	80.95	80.84	80.77	80.75	80.82	80.89	80.97	81.06	81.20	81.36
EX RT CROSS SLOPE(%)	3.36	3.86	4.45	4.73	4.59	4.09	3.11	2.14	1.56	1.22	1.52	1.88	1.98	2.00	2.00	1.81	0.98	2.15	1.92	2.04	1.65	1.63	2.00	2.13	2.88	1.97	1.81	1.73	1.75	1.93
EX RT EP	80.05	80.09	80.14	80.15	80.14	80.16	80.30	80.44	80.44	80.44	80.45	80.45	80.56	80.67	80.80	80.95	81.05	81.03	81.07	80.89	80.76	80.65	80.53	80.49	80.47	80.65	80.75	80.85	80.99	81.13
PROPOSED RT CROSS SLOPE(%)	4.2	3.8	3.4	2.7	1.9	1.5	1.8	2.3	3.1	4.2	3.7	3.0	2.9	2.8	2.8	3.0	2.8	2.2	2.9	2.6	2.6	2.7	2.7	3.2	3.1	3.4	3.2	3.0	3.0	3.0
PROPOSED RT TC	79.92	80.00	80.08	80.16	80.24	80.32	80.40	80.41	80.29	80.11	80.21	80.33	80.46	80.58	80.71	80.83	80.96	81.02	80.95	80.83	80.71	80.58	80.46	80.33	80.33	80.46	80.59	80.73	80.87	81.00

PROFILE

SCALE: HORIZONTAL 1" = 40'
VERTICAL 1" = 4'

BRENTWOOD
ENGINEERING DEPARTMENT
708 THIRD STREET, BRENTWOOD, CA 94513

cbg Carlson, Barbee & Gibson, Inc.
CIVIL ENGINEERS • SURVEYORS • PLANNERS
2000 CROW CANYON PLACE, SUITE 250
SAN RAMON, CALIFORNIA 94583
TEL (925) 866-0322
FAX (925) 866-8575

IMPROVEMENT PLAN AD 98-2/CIFP 98-1

MINNESOTA AVENUE (0+00 - 11+00)

BRENTWOOD **CALIFORNIA**

NO.	REVISIONS	BY	APP	DATE

DESIGNED UNDER THE DIRECTION OF:
KENNETH R. TAPPIN 9-3-98 DATE
R.C.E. No. 52845 REGISTRATION EXPIRES 12-31-98

DESIGN: TER	DATE: 5-8-98
DRAWN: JOB	DATE: 5-8-98
CHECKED: KRT	DATE: 5-8-98

REGISTERED PROFESSIONAL ENGINEER KENNETH R. TAPPIN 52845 EXP.12/31/98 CIVIL STATE OF CALIFORNIA

SHEET 6 OF 50 SHEETS

6/21/00 AS BUILT F:\94453\ACAD\PHASE30\IP\IP06
JOB NO. 94453-30

CIP 98-0720

CIP 98-0720
Improvement Plan
Special Planning Area 'L'- Plan and Profile- Minnesota Ave. (0+00 - 11+00)

LEGEND:

- EXISTING TREE TO BE REMOVED
- EXISTING PAVEMENT TO BE REMOVED AND REPLACED
- PAVEMENT WIDENING

CURVE TABLE

NOTE: CURVE NUMBERS ARE SHOWN WITH 'O' ON PLAN.

CURVE	RADIUS	DELTA	LENGTH	DESCRIPTION
1	30.00'	89°31'00"	46.87'	F/C
2	30.00'	90°29'00"	47.38'	F/C

NOTES:

1. CONSTRUCT DEPRESSION IN CURB FOR FUTURE HANDICAP RAMP (SEE HC RAMP DETAIL ON SHEET 43 FOR LIMIT OF DEPRESSION).
2. INSTALL 12 INCHES FRESNO IRRIGATION APPLIANCE 6x8 ORCHARD VALVE 24 FEET ON CENTER OR AS APPROVED BY PROPERTY OWNER.
3. EXISTING ECCID PIPES SHALL BE REMOVED.
4. CONSTRUCT CONCRETE CAP OVER 12 INCHES STORM DRAIN AT THE DISCRETION OF THE CITY INSPECTOR.

MINNESOTA AVENUE

SCALE: 1" = 40'

EX CROWN	81.45	81.50	81.45	81.31	81.18	81.13	81.07	81.05	81.04	81.12	81.27	81.41	81.48	81.54	81.57	81.58
EX RT CROSS SLOPE(%)	1.87	1.54	1.37	1.48	1.79	2.21	2.53	2.25	1.94	1.85	1.91	1.90	1.66	1.25	1.58	1.91
EX RT EP	81.23	81.32	81.29	81.13	80.97	80.87	80.77	80.78	80.81	80.90	81.04	81.18	81.28	81.39	81.38	81.35
PROPOSED RT CROSS SLOPE(%)	2.8	2.8	3.1	3.0	2.7	2.9	3.0	3.4	3.5	3.3	3.4	3.4	3.3	3.2	2.6	2.9
PROPOSED RT TC	81.14	81.20	81.14	81.01	80.89	80.76	80.64	80.50	80.60	80.73	80.85	80.98	81.10	81.23	81.30	81.23

EX CROWN	81.15	81.23	81.33	81.46	81.59	81.73	81.87	82.00	82.13	81.88
EX RT CROSS SLOPE(%)	1.85	1.69	1.60	1.51	1.42	1.42	1.41	1.60	1.70	1.09
EX RT EP	80.93	81.03	81.14	81.28	81.42	81.56	81.70	81.81	81.93	81.75
PROPOSED RT CROSS SLOPE(%)	3.5	3.4	3.3	3.5	3.4	3.6	3.6	3.5	3.7	3.3
PROPOSED RT TC	80.70	80.78	80.87	80.95	81.06	81.18	81.33	81.49	81.64	81.56

PROFILE

SCALE: HORIZONTAL 1" = 40'
VERTICAL 1" = 4'

THESE ARE THE FINAL CONSTRUCTION PLANS FOR THE PROJECT WITH THE ADDITIONS NOTED FOR FIELD CHANGES BROUGHT TO THE ATTENTION OF THE ENGINEER BY THE DEVELOPER, CONTRACTOR, AND THE CITY ENGINEER.

REGISTERED PROFESSIONAL ENGINEER KENNETH R. TAPPIN 52845 EXP. 12/31/02 CIVIL STATE OF CALIFORNIA

KENNETH R. TAPPIN RCE 52845 EXP. 12/31/02 — 8-30-2000 DATE

BRENTWOOD
ENGINEERING DEPARTMENT
708 THIRD STREET, BRENTWOOD, CA 94513

cbg Carlson, Barbee & Gibson, Inc.
CIVIL ENGINEERS • SURVEYORS • PLANNERS
2000 CROW CANYON PLACE, SUITE 250 SAN RAMON, CALIFORNIA 94583
TEL (925) 866-0322 FAX (925) 866-8575

IMPROVEMENT PLAN — AD 98-2/CIFP 98-1

MINNESOTA AVENUE (11+00 - 22+00)

BRENTWOOD — CALIFORNIA

NO.	REVISIONS	BY	APP	DATE

DESIGNED UNDER THE DIRECTION OF: KENNETH R. TAPPIN, R.C.E. No. 52845 REGISTRATION EXPIRES 12-31-98 — 9-3-98 DATE

DESIGN: TER	DATE: 5-8-98
DRAWN: JOB	DATE: 5-8-98
CHECKED: KRT	DATE: 5-8-98

REGISTERED PROFESSIONAL ENGINEER KENNETH R. TAPPIN 52845 EXP. 12/31/98 CIVIL STATE OF CALIFORNIA

SHEET 7 OF 50 SHEETS

6/21/00 AS BUILT F:\94453\ACAD\PHASE30\IP\IP07
JOB NO. 94453-30
CIP 98-0720

CIP 98-0720
Improvement Plan
Special Planning Area 'L'- Plan and Profile- Minnesota Ave. (11+00 - 22+00)

NOTES:

1. CONSTRUCT MANHOLE BASE FOR ULTIMATE CONDITION. PLUG 15" MAINS FOR TEMPORARY CONDITION. GROUT BASE TO DIRECT FLOWS THROUGH 8" MAINS. ONCE CONSTRUCTION OF 15" MAIN IN FUTURE SAND CREEK ROAD IS COMPLETED, GROUT MUST BE REMOVED AND 8" MAIN TO NORTH TO BE PLUGGED.
2. PROVIDE DEPRESSION IN CURB FOR FUTURE DRIVEWAYS AT LOCATIONS SHOWN. DRIVEWAYS AND SIDEWALKS TO BE BUILT AS PART OF FUTURE SUBD.
3. CONSTRUCT DEPRESSION IN CURB FOR FUTURE HANDICAP RAMP (SEE HC RAMP DETAIL ON SHEET 43 FOR LIMIT OF DEPRESSION).
4. EXISTING ECCID PIPES SHALL BE REMOVED.

CURVE TABLE

NOTE: CURVE NUMBERS ARE SHOWN WITH 'O' ON PLAN.

CURVE	RADIUS	DELTA	LENGTH	DESCRIPTION
1	40.00'	89°31'00"	62.49'	F/C
2	40.00'	85°22'25"	59.60'	F/C
3	30.00'	89°31'00"	46.87'	F/C
4	30.00'	90°29'00"	47.38'	F/C
5	30.00'	90°33'24"	48.99'	F/C
6	30.00'	94°31'06"	49.49'	F/C

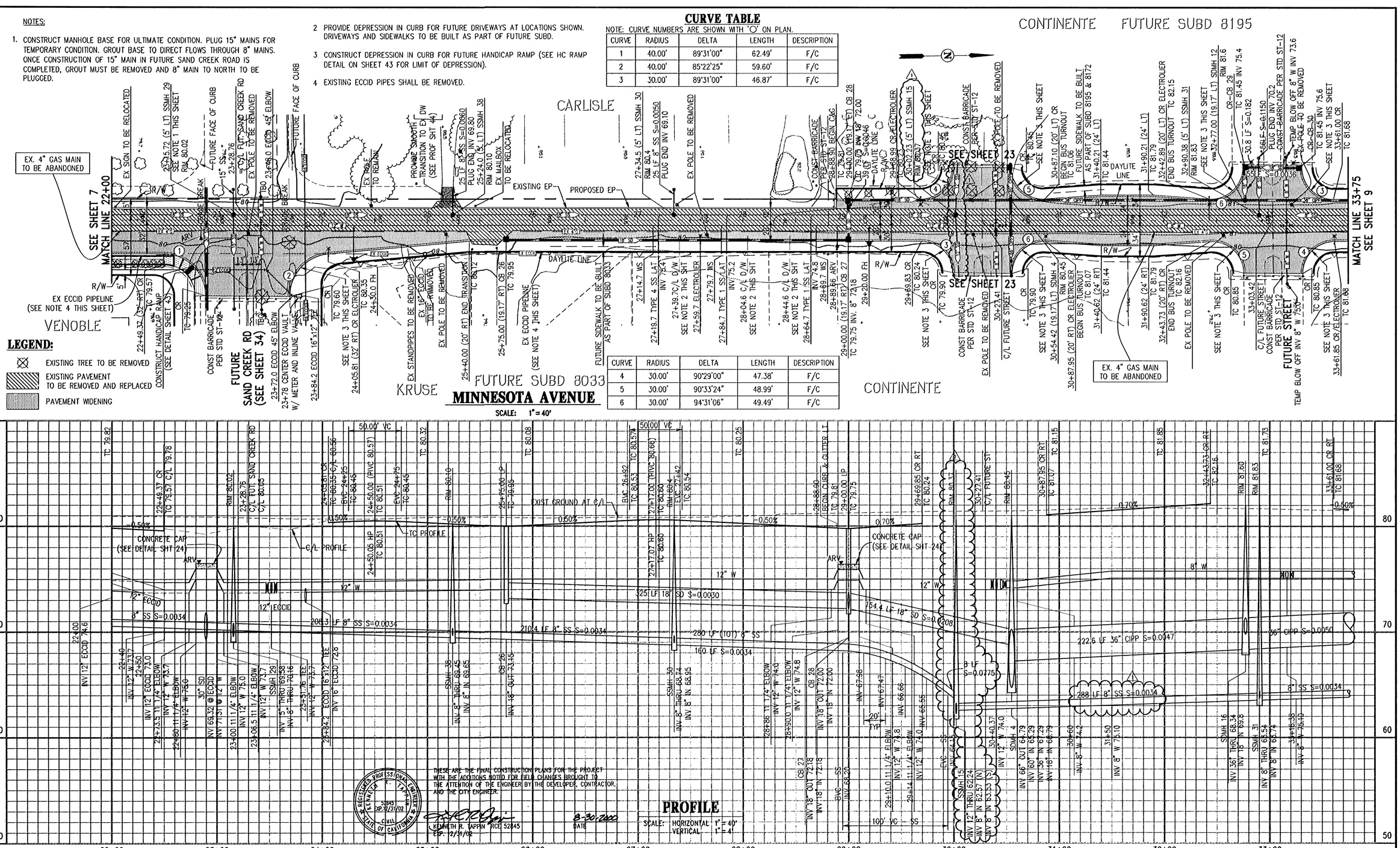

THESE ARE THE FINAL CONSTRUCTION PLANS FOR THE PROJECT WITH THE ADDITIONS NOTED FOR FIELD CHANGES BROUGHT TO THE ATTENTION OF THE ENGINEER BY THE DEVELOPER, CONTRACTOR, AND THE CITY ENGINEER.

KENNETH R. TAPPIN RCE 52845 EXP. 12/31/02 — DATE 8-30-2000

REGISTERED PROFESSIONAL ENGINEER KENNETH R. TAPPIN 52845 EXP. 12/31/02 CIVIL STATE OF CALIFORNIA

BRENTWOOD
ENGINEERING DEPARTMENT
708 THIRD STREET, BRENTWOOD, CA 94513

cbg Carlson, Barbee & Gibson, Inc.
CIVIL ENGINEERS • SURVEYORS • PLANNERS
2000 CROW CANYON PLACE, SUITE 250
SAN RAMON, CALIFORNIA 94583
TEL (925) 866-0322
FAX (925) 866-8575

IMPROVEMENT PLAN

AD 98-2/CIFP 98-1

MINNESOTA AVENUE (22+00 - 33+00)

BRENTWOOD CALIFORNIA

NO.	REVISIONS	BY	APP	DATE
1	REVISED LOCATION OF SSMH 15	TER		8/26/99

DESIGNED UNDER THE DIRECTION OF:
KENNETH R. TAPPIN — DATE 8-3-99
R.C.E. No. 52845 REGISTRATION EXPIRES 12-31-02

DESIGN: TER	DATE: 4-13-99
DRAWN: JOB	DATE: 4-13-99
CHECKED: KRT	DATE: 4-13-99

REGISTERED PROFESSIONAL ENGINEER KENNETH R. TAPPIN 52845 EXP. 12/31/02 CIVIL STATE OF CALIFORNIA

SHEET 8 OF 50 SHEETS

6/21/00 AS BUILT

F:\94453\ACAD\PHASE30\P\P08

JOB NO. 94453-30

CIP 98-0720

CIP 98-0720
Improvement Plan
Special Purpose Plan and Profile- Minnesota Ave. (22+00 - 33+00).

CURVE TABLE

NOTE: CURVE NUMBERS ARE SHOWN WITH 'O' ON PLAN.

CURVE	RADIUS	DELTA	LENGTH	DESCRIPTION
1	30.00'	90°00'00"	47.12'	F/C
2	40.00'	90°29'00"	63.17'	F/C
3	40.00'	89°31'00"	62.49'	F/C
4	580.00'	35°43'00"	361.56'	F/C
5	620.00'	35°43'00"	346.49'	F/C
6	600.00'	35°43'00"	374.02'	C/L
7	595.00'	2°18'00"	23.89'	C/L SS

LEGEND:

- EXISTING TREE TO BE REMOVED
- EXISTING PAVEMENT TO BE REMOVED AND REPLACED
- PAVEMENT WIDENING

NOTES:

1. PROVIDE DEPRESSION IN CURB FOR FUTURE DRIVEWAYS AT LOCATIONS SHOWN. DRIVEWAYS AND SIDEWALKS TO BE BUILT AS PART OF FUTURE SUBD.
2. CONSTRUCT DEPRESSION IN CURB FOR FUTURE HANDICAP RAMP (SEE HC RAMP DETAIL ON SHEET 43 FOR LIMIT OF DEPRESSION).

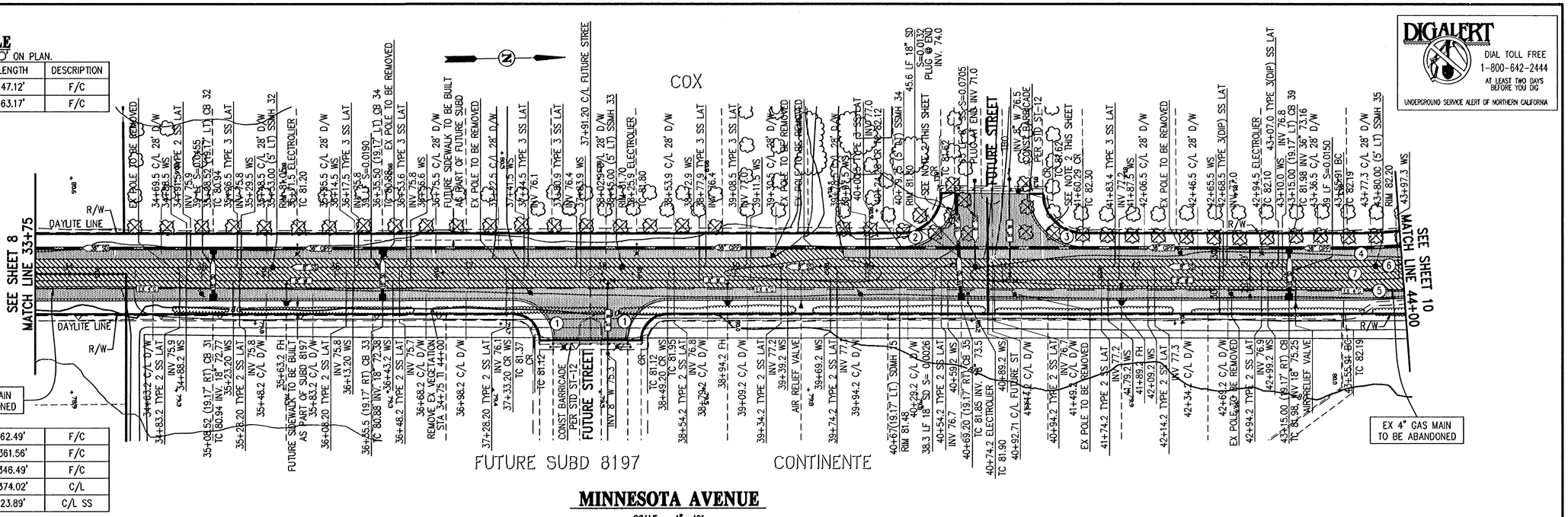

MINNESOTA AVENUE

SCALE: 1" = 40'

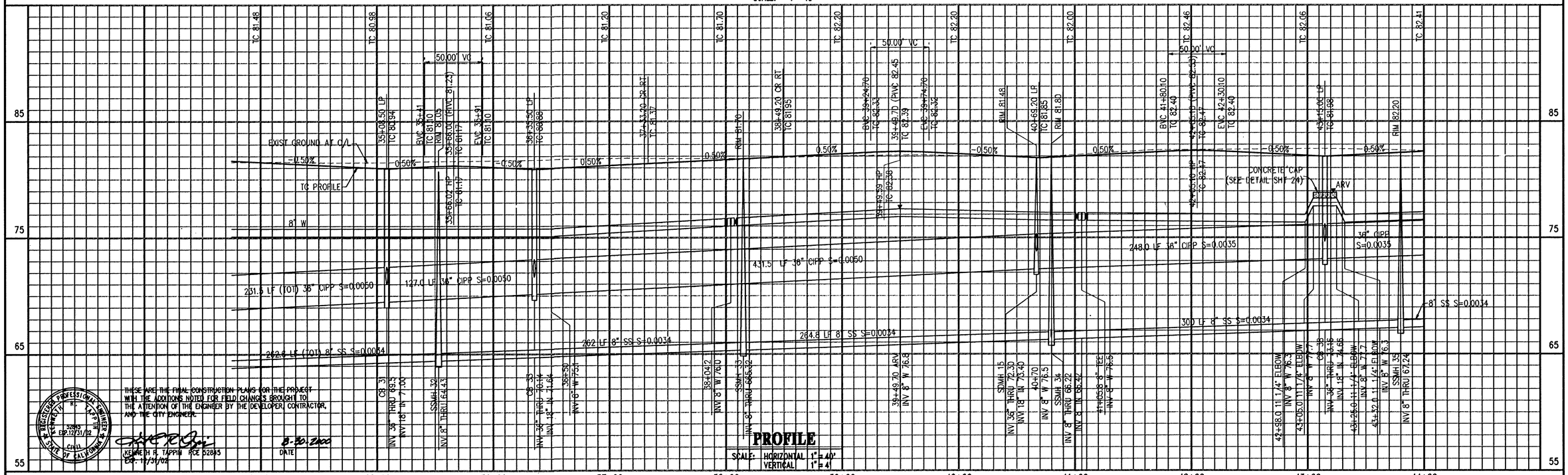

PROFILE

SCALE: HORIZONTAL 1" = 40'
VERTICAL 1" = 4'

THESE ARE THE FINAL CONSTRUCTION PLANS FOR THE PROJECT WITH THE ADDITIONS NOTED FOR FIELD CHANGES BROUGHT TO THE ATTENTION OF THE ENGINEER BY THE DEVELOPER, CONTRACTOR, AND THE CITY ENGINEER.

KENNETH R. TAPPIN RCE 52845 — DATE 8-30-2000
EXP. 12/31/02

CIP 98-0720
Improvement Plan
Specification Number
Project Name: Minnesota Ave. (33+00 - 44+00)
Project Number: 44-1100

BRENTWOOD ENGINEERING DEPARTMENT 708 THIRD STREET, BRENTWOOD, CA 94513	cbg Carlson, Barbee & Gibson, Inc. CIVIL ENGINEERS • SURVEYORS • PLANNERS 2000 CROW CANYON PLACE, SUITE 250 SAN RAMON, CALIFORNIA 94583 TEL (925) 866-0322 FAX (925) 866-8575	IMPROVEMENT PLAN **MINNESOTA AVENUE** **(33+00 - 44+00)** BRENTWOOD CALIFORNIA	AD 98-2/CIFP 98-1

NO.	REVISIONS	BY	APP	DATE

DESIGNED UNDER THE DIRECTION OF:
KENNETH R. TAPPIN — DATE 9-3-99
R.C.E. No. 52845 REGISTRATION EXPIRES 12-31-02

DESIGN: TER	DATE: 4-13-99
DRAWN: JOB	DATE: 4-13-99
CHECKED: KRT	DATE: 4-13-99

REGISTERED PROFESSIONAL ENGINEER — KENNETH R. TAPPIN — 52845 EXP. 12/31/02 — CIVIL — STATE OF CALIFORNIA

SHEET 9 OF 50 SHEETS

6/21/00 AS BUILT

F:\94453\ACAD\PHASE3O\PJP09
JOB NO. 94453-30

CIP 98-0720

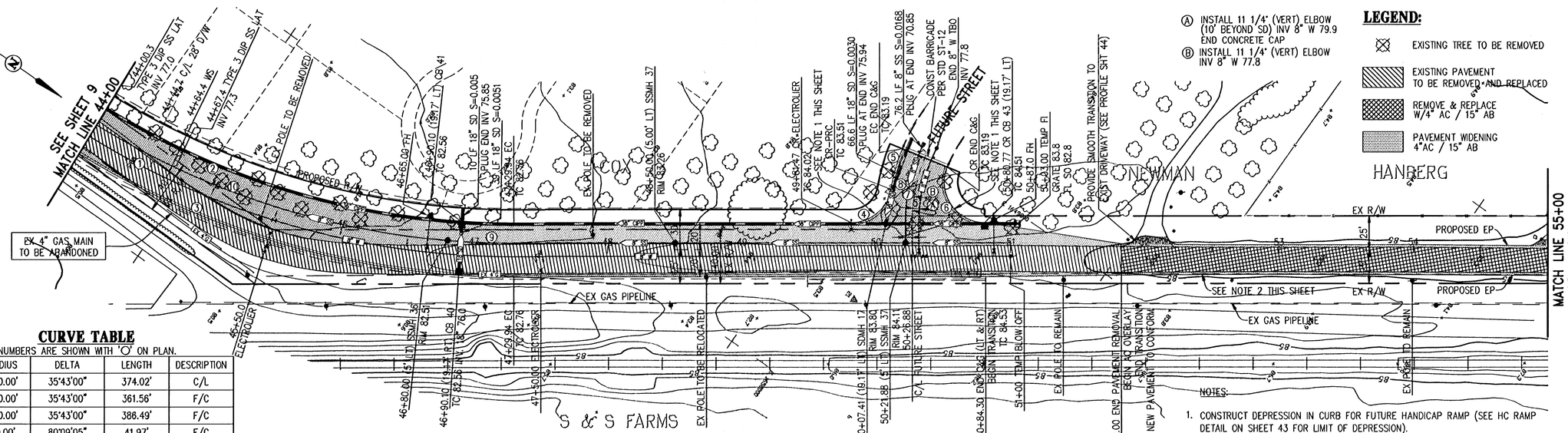

CURVE TABLE

NOTE: CURVE NUMBERS ARE SHOWN WITH 'O' ON PLAN.

CURVE	RADIUS	DELTA	LENGTH	DESCRIPTION
1	600.00'	35°43'00"	374.02'	C/L
2	580.00'	35°43'00"	361.56'	F/C
3	620.00'	35°43'00"	386.49'	F/C
4	30.00'	80°09'05"	41.97'	F/C
5	146.00'	12°15'27"	31.23'	F/C
6	30.00'	112°06'54"	58.70'	F/C
7	128.00'	35°26'12"	79.17'	F/C
8	250.00'	15°16'15"	66.63'	C/L SD
9	595.00'	4°46'07"	49.52'	C/L SS
10	595.00'	28°38'52"	297.50'	C/L SS

MINNESOTA AVENUE

SCALE: 1" = 40'

NOTES:

1. CONSTRUCT DEPRESSION IN CURB FOR FUTURE HANDICAP RAMP (SEE HC RAMP DETAIL ON SHEET 43 FOR LIMIT OF DEPRESSION).
2. EX 4" GAS MAIN TO BE ABANDONED. REMOVE IF IN CONFLICT WITH PROPOSED IMPROVEMENTS.
3. MAINTAIN EXISTING DRAINAGE PATTERN STA 51+82 TO STA 55+00.

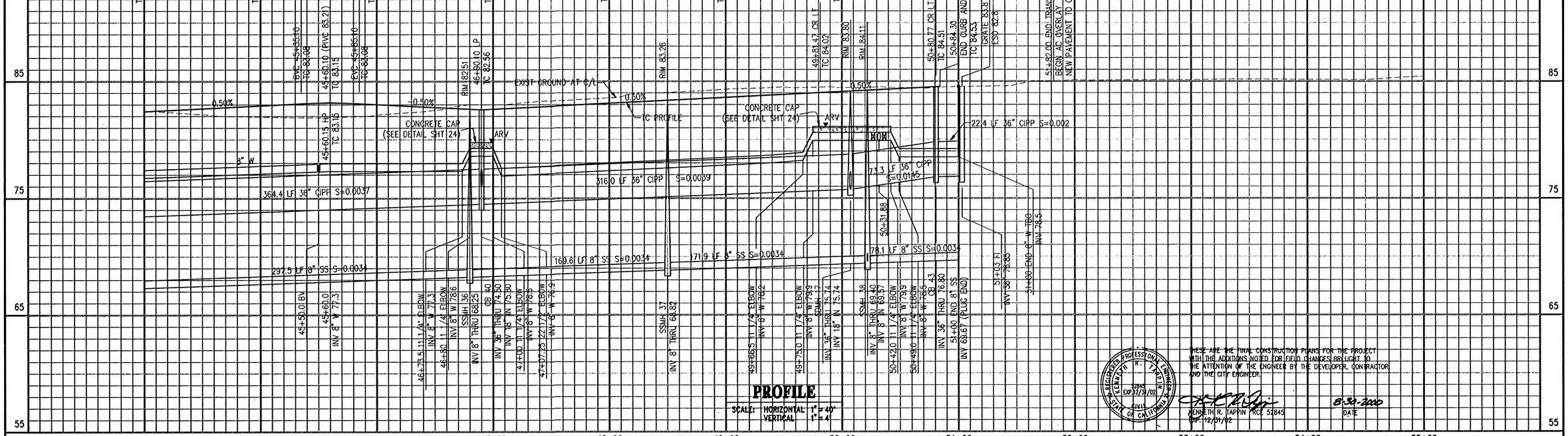

PROFILE

SCALE: HORIZONTAL 1" = 40'
VERTICAL 1" = 4'

THESE ARE THE FINAL CONSTRUCTION PLANS FOR THE PROJECT WITH THE ADDITIONS NOTED FOR FIELD CHANGES BROUGHT TO THE ATTENTION OF THE ENGINEER BY THE DEVELOPER, CONTRACTOR AND THE CITY ENGINEER.

KENNETH R. TAPPIN RCE 52845
EXP. 12/31/02

8-30-2000
DATE

CIP 98-0720
Improvements for
Special Planning Area 1 - Plan and Profile- Minnesota Ave. (44+00 - 55+00)

BRENTWOOD
ENGINEERING DEPARTMENT
708 THIRD STREET, BRENTWOOD, CA 94513

cbg Carlson, Barbee & Gibson, Inc.
CIVIL ENGINEERS • SURVEYORS • PLANNERS
2000 CROW CANYON PLACE, SUITE 250
SAN RAMON, CALIFORNIA 94583
TEL (925) 866-0322
FAX (925) 866-8575

IMPROVEMENT PLAN

AD 98-2/CIFP 98-1

MINNESOTA AVENUE (44+00 - 55+00)

BRENTWOOD CALIFORNIA

NO.	REVISIONS	BY	APP	DATE

DESIGNED UNDER THE DIRECTION OF:
KENNETH R. TAPPIN
RCE No. 52845 REGISTRATION EXPIRES 12-31-02
9-3-99 DATE

DESIGN: TER DATE: 4-13-99
DRAWN: JOB DATE: 4-13-99
CHECKED: KRT DATE: 4-13-99

REGISTERED PROFESSIONAL ENGINEER KENNETH R. TAPPIN 52845 EXP. 12/31/02 CIVIL STATE OF CALIFORNIA

SHEET 10 OF 50 SHEETS

6/21/00 AS BUILT F:\94453\ACAD\PHASE3O\P\P10
JOB NO. 94453-30

CIP-98-0720

CURVE TABLE

NOTE: CURVE NUMBERS ARE SHOWN WITH 'O' ON PLAN.

CURVE	RADIUS	DELTA	LENGTH	DESCRIPTION
1	100.00'	50°41'23"	88.47'	EP

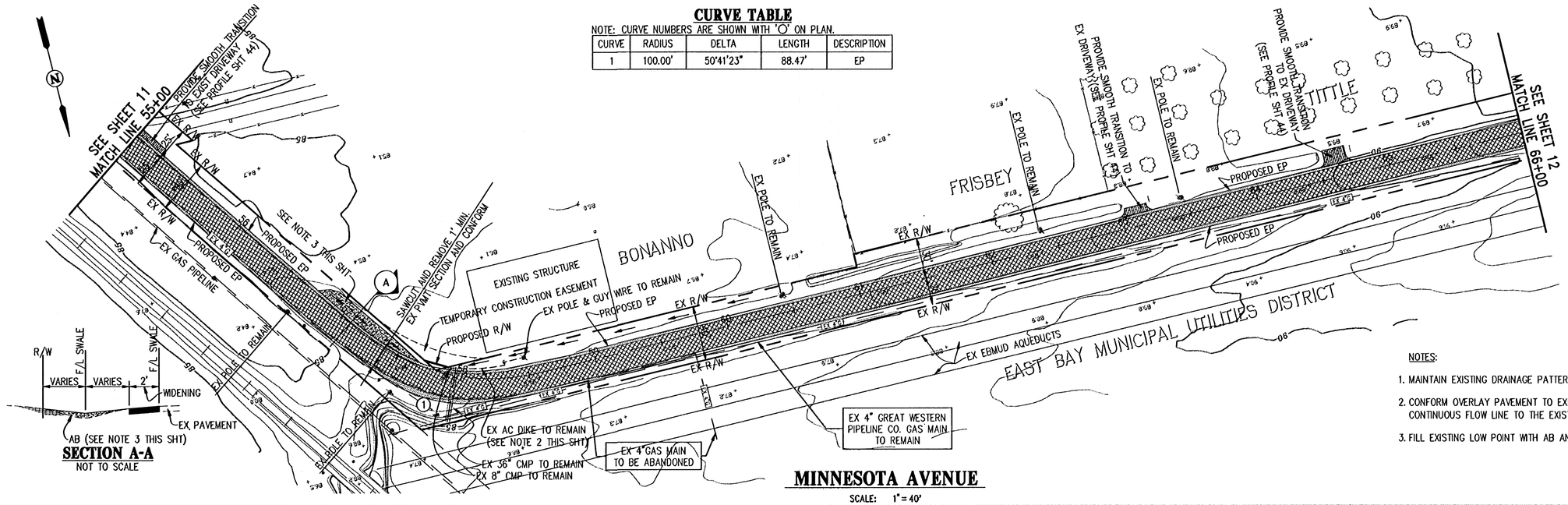

SECTION A-A
NOT TO SCALE

MINNESOTA AVENUE

SCALE: 1" = 40'

LEGEND:

- REMOVE & REPLACE 4" AC ON 15" AB
- PAVEMENT WIDENING

NOTES:

1. MAINTAIN EXISTING DRAINAGE PATTERN FROM STA 55+00 TO STA 66+00.
2. CONFORM OVERLAY PAVEMENT TO EXISTING AC DIKE MAINTAINING A CONTINUOUS FLOW LINE TO THE EXISTING 8" CMP.
3. FILL EXISTING LOW POINT WITH AB AND GRADE TO DRAIN TO EXISTING AC DIKE.

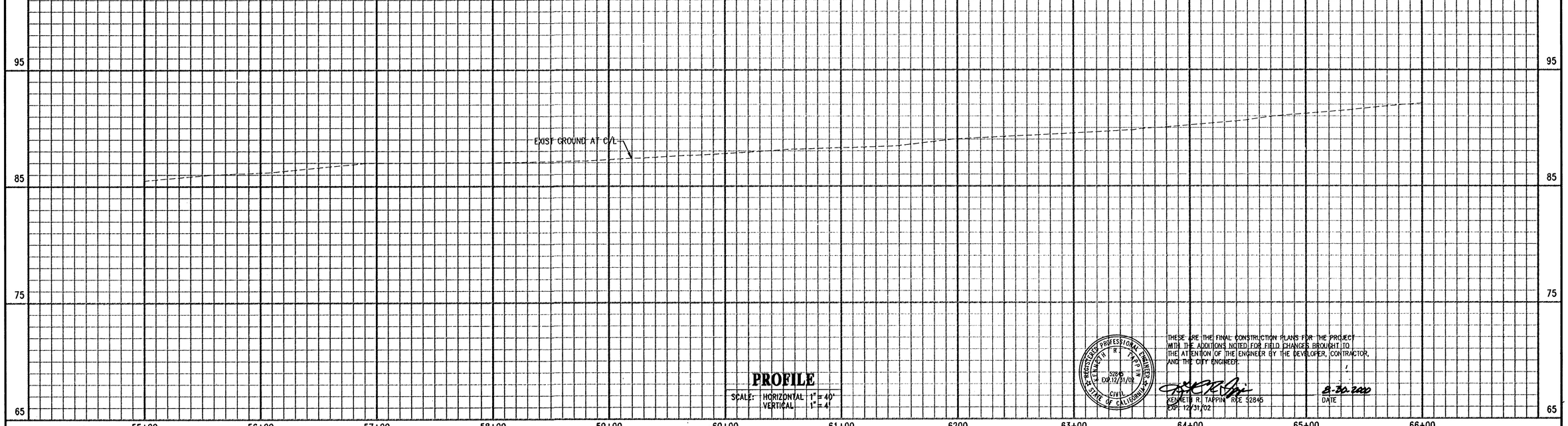

PROFILE

SCALE: HORIZONTAL 1" = 40'
VERTICAL 1" = 4'

REGISTERED PROFESSIONAL ENGINEER KENNETH R. TAPPIN 52845 EXP.12/31/02 CIVIL STATE OF CALIFORNIA

THESE ARE THE FINAL CONSTRUCTION PLANS FOR THE PROJECT WITH THE ADDITIONS NOTED FOR FIELD CHANGES BROUGHT TO THE ATTENTION OF THE ENGINEER BY THE DEVELOPER, CONTRACTOR, AND THE CITY ENGINEER.

KENNETH R. TAPPIN RCE 52845
EXP. 12/31/02

8-30-2000
DATE

BRENTWOOD
ENGINEERING DEPARTMENT
708 THIRD STREET, BRENTWOOD, CA 94513

cbg Carlson, Barbee & Gibson, Inc.
CIVIL ENGINEERS • SURVEYORS • PLANNERS
2000 CROW CANYON PLACE, SUITE 250
SAN RAMON, CALIFORNIA 94583
TEL (925) 866-0322
FAX (925) 866-8575

IMPROVEMENT PLAN

AD 98-2/CIFP 98-1

MINNESOTA AVENUE (55+00 - 66+00)

BRENTWOOD **CALIFORNIA**

NO.	REVISIONS	BY	APP	DATE

DESIGNED UNDER THE DIRECTION OF:
KENNETH R. TAPPIN
R.C.E. No. 52845 REGISTRATION EXPIRES 12-31-98
9-3-98
DATE

DESIGN: TER	DATE: 5-8-98
DRAWN: JOB	DATE: 5-8-98
CHECKED: KRT	DATE: 5-8-98

REGISTERED PROFESSIONAL ENGINEER KENNETH R. TAPPIN 52845 EXP.12/31/98 CIVIL STATE OF CALIFORNIA

SHEET **11** OF **50** SHEETS

6/21/00 AS BUILT

F:\94453\ACAD\PHASE3O\P\P11
JOB NO. 94453-30

CIP 98-0720

CIP 98-0720
Improvement Plan
Special Planning Area 'L' - Plan and Profile-Minnesota Ave. (55+00 - 66+00)

LEGEND:

- EXISTING PAVEMENT TO BE REMOVED AND REPLACED
- REMOVE & REPLACE 4" AC ON 18" AB
- PAVEMENT WIDENING

CURVE TABLE

NOTE: CURVE NUMBERS ARE SHOWN WITH 'O' ON PLAN.

CURVE	RADIUS	DELTA	LENGTH	DESCRIPTION
1	300.00'	6°52'30"	36.00'	C/L
2	275.00'	6°52'30"	33.00'	F/C
3	315.00'	6°52'30"	37.80'	F/C
4	30.00'	90°00'00"	47.12'	F/C
5	30.00'	82°02'38"	42.96'	F/C
6	40.00'	97°57'22"	68.39'	F/B

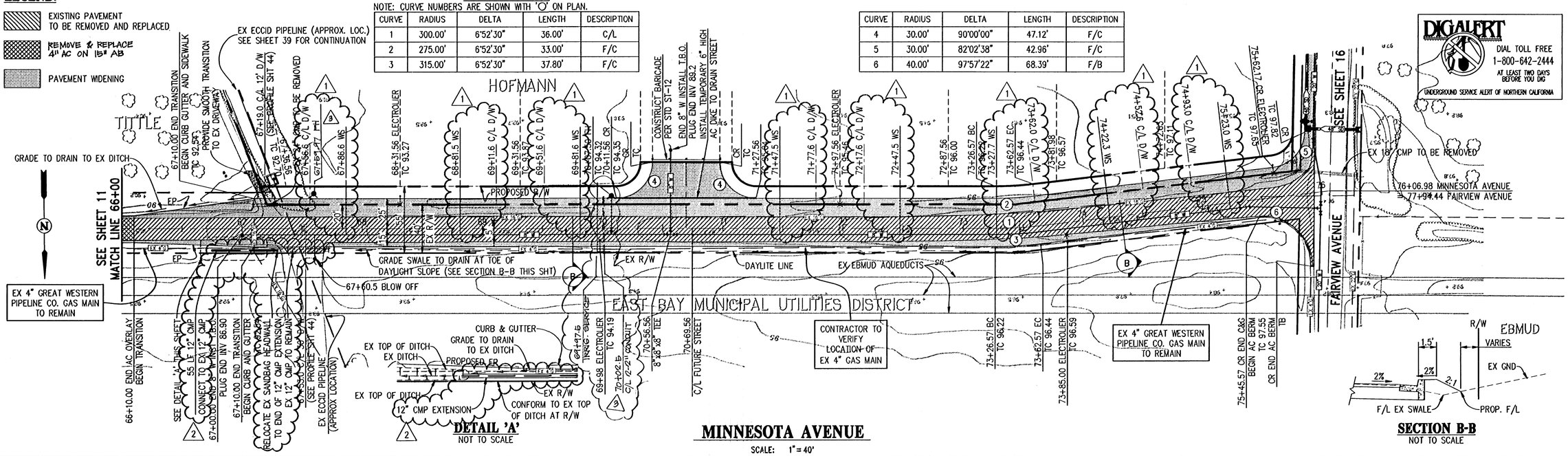

DETAIL 'A'
NOT TO SCALE

SECTION B-B
NOT TO SCALE

MINNESOTA AVENUE

SCALE: 1" = 40'

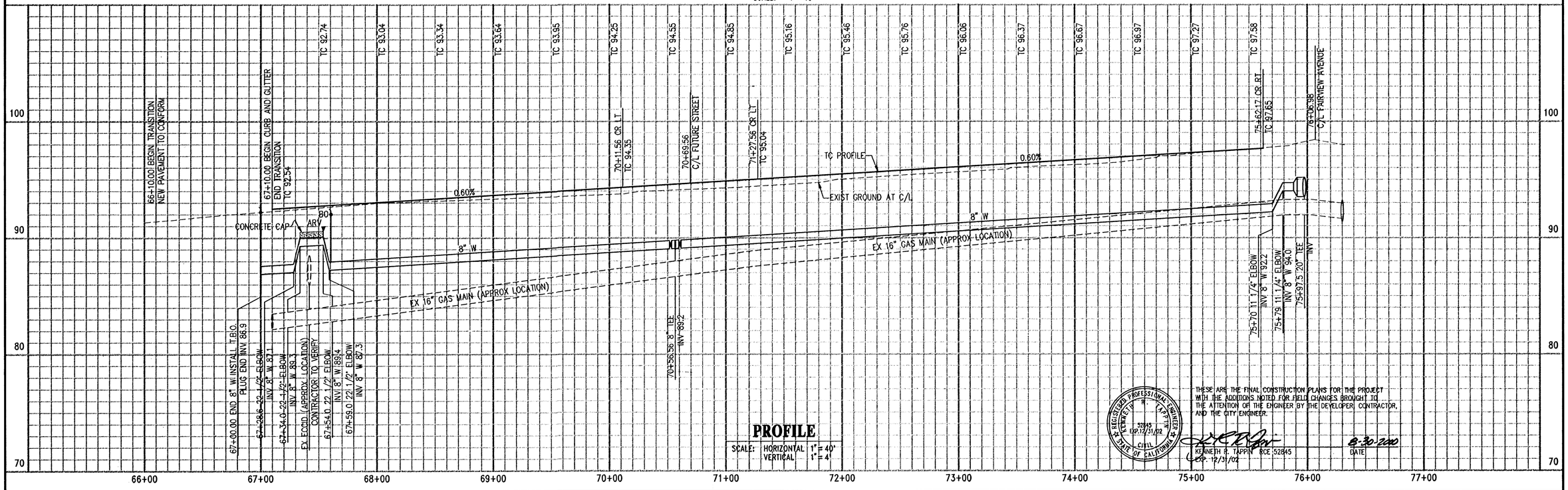

PROFILE
SCALE: HORIZONTAL 1" = 40'
VERTICAL 1" = 4'

THESE ARE THE FINAL CONSTRUCTION PLANS FOR THE PROJECT WITH THE ADDITIONS NOTED FOR FIELD CHANGES BROUGHT TO THE ATTENTION OF THE ENGINEER BY THE DEVELOPER, CONTRACTOR, AND THE CITY ENGINEER.

KENNETH R. TAPPIN RCE 52845 EXP. 12/31/02 — DATE 8-30-2000

REGISTERED PROFESSIONAL ENGINEER — KENNETH R. TAPPIN — 52845 EXP. 12/31/02 — CIVIL — STATE OF CALIFORNIA

CIP 98-0720
Improvement Plan
Special Planning Area 'L' Plan and Profile Minnesota Ave. (66+00 - 77+00)

BRENTWOOD
ENGINEERING DEPARTMENT
708 THIRD STREET, BRENTWOOD, CA 94513

cbg Carlson, Barbee & Gibson, Inc.
CIVIL ENGINEERS • SURVEYORS • PLANNERS
2000 CROW CANYON PLACE, SUITE 250
SAN RAMON, CALIFORNIA 94583
TEL (925) 866-0322
FAX (925) 866-8575

IMPROVEMENT PLAN — **AD 98-2/CIFP 98-1**

MINNESOTA AVENUE (66+00 - 77+00)

BRENTWOOD — CALIFORNIA

NO.	REVISIONS	BY	APP	DATE
1	ADDED WATER SERVICES & DRIVEWAYS	TER	RCE	10/21/98
2	REVISED SD SIZES AT STA 67+00±	TER	RCE	10/22/98
3	ADDED FIRE HYDRANT & IRRIG. SERVICE	RIC		3/22/99

DESIGNED UNDER THE DIRECTION OF: KENNETH R. TAPPIN — DATE 3-19-98
R.C.E. No. 52845 REGISTRATION EXPIRES 12-31-98
DESIGN: TER — DATE: 5-8-98
DRAWN: JOB — DATE: 5-8-98
CHECKED: KRT — DATE: 5-8-98

REGISTERED PROFESSIONAL ENGINEER — KENNETH R. TAPPIN — 52845 EXP. 12/31/98 — CIVIL — STATE OF CALIFORNIA

SHEET 12 OF 50 SHEETS

6/21/00 AS BUILT F:\94453\ACAD\PHASE30\PJP12
JOB NO. 94453-30
CIP 98-0720

DIG ALERT
DIAL TOLL FREE
1-800-642-2444
AT LEAST TWO DAYS BEFORE YOU DIG
UNDERGROUND SERVICE ALERT OF NORTHERN CALIFORNIA

DOBBS

KINDER

SCIORTINO

PRIVATE ST

SAND CREEK

EX. GAS MAIN TO REMAIN

EX 2" GAS MAIN TO REMAIN

MATCH LINE 53+00
SEE SHEET 14

41+85± (15' RT±) CONNECT TO EX 20" W AT EX BLIND FLANGE AT EX TEE

CONSTRUCT TYPE I THRUST BLOCK (SEE DETAIL THIS SHEET)

EX CULVERT

EX FH

BLOW OFF

PROVIDE FLANGE CONNECTION FOR FUTURE EXTENSION OF CULVERT

CONSTRUCT TYPE III THRUST BLOCK (SEE DETAIL THIS SHEET)

CONSTRUCT TYPE II THRUST BLOCK (SEE DETAIL THIS SHEET)

EX GAS MAIN (SEE NOTE 1 THIS SHEET)

EX MAINT. ROAD

COUNTY FLOOD CONTROL R/W

EX EP

EX 2" GAS MAIN TO REMAIN

47+30.0 FH

52+30.0 FH

48+50.0 (15.0' RT) 11 1/4° ELBOW

48+75.0 (10.0' RT) 11 1/4° ELBOW

NOTES:

1. EXISTING GAS MAIN IS ATTACHED TO SIDE OF CULVERT.
2. LOCATION OF EXISTING GAS MAIN IS APPROXIMATE ONLY, CONTRACTOR TO VERIFY.
3. WATERMAIN TO BE 20" STEEL WELDED PIPE (1/4" MIN THIKNESS) BETWEEN STA 41+95 AND STA 43+34.5. SHOP DRAWINGS TO BE PREPARED BY OTHERS.
4. STEEL PIPE TO BE BUILT TO THE FOLLOWNG AWWA SPECIFICATIONS:
   STEEL PIPE: AWWA C200
   CEMENT MORTAR AND COATING: AWWA C205
   FLANGES: AWWA C207 CLASS D
   FITTINGS: AWWA C208
   WRAPPING: AWWA C214
5. A CERTIFIED INSPECTOR SHALL INSPECT THE WELDS OF THE STEEL PIPE. WRITTEN CERTIFICATION SHALL BE SUBMITTED TO THE CITY.

FAIRVIEW AVENUE

SCALE: 1"= 40'

CENTERLINE PIPE @ WORK POINT
CENTERLINE THRUST BLOCK
#5 STIRRUPS @ 12" O.C.
CENTERLINE PIPE @ WORK POINT
CENTERLINE THRUST BLOCK
3'-0" LAP
3" CLR. TYP.
#5 @ 12" O.C. TOP & BOTTOM
0'-3" CLR. TYP.
VIEW A-A

CENTERLINE PIPE @ WORK POINT
CENTERLINE THRUST BLOCK
#5 STIRRUPS @ 12" O.C.
CENTERLINE PIPE @ WORK POINT
CENTERLINE THRUST BLOCK
PIPE LOCATION VARIES SEE CIVIL PLAN & PROFILE
#5 @ 12" O.C. TOP & BOTTOM
3'-0" LAP
3" CLR. TYP.
0'-3" CLR. TYP.
VIEW A-A

CENTERLINE PIPE & THRUST BLOCK
#5 STIRRUPS @ 12" O.C.
CENTERLINE PIPE & THRUST BLOCK
BENT PLATE 1/4 X 2 CENTERED WITH THRUST BLOCK, TYP.
#5 @ 12" O.C. TOP & BOTTOM
VIEW A-A

CENTERLINE PIPE @ WORK POINT
CENTERLINE THRUST BLOCK
1'-0" MIN. TYP.
PIPE WORK POINT TO BE CENTERED WITH THRUST BLOCK, TYPICAL
CENTERLINE PIPE
6" MIN. TYP.
20"± I.D. PVC PIPE
EXTENT OF FUTURE WATERLINE EXTENSION
4'-0" SQUARE
0'-6" TYP.
TYPE I THRUST BLOCK
DEFL. ANGLE 11.25°

PIPE WORK POINT TO BE CENTERED WITHIN THRUST BLOCK, TYPICAL
CENTERLINE THRUST BLOCK
8" MIN.
30°
CENTERLINE STEEL PIPE
20"± I.D.
90°
CENTERLINE STEEL PIPE
EXTENT OF FUTURE WATERLINE EXTENSION
7'-0" SQUARE
TYPE II THRUST BLOCK
11.25° < DEFL. ≤ 45°

CL PIPE SLOPE NOT TO EXCEED 22.5° OFF HORIZ.
6" MIN.
EXTENT OF FUTURE WATERLINE EXTENSION
CENTERLINE HORIZ. PIPE
BOLTED FLANGE CONN. BY OTHERS
TYPE III THRUST BLOCK
STA. 42+19.5 & STA. 43+10.0

SEE NOTE 3 ABOVE
41+85 CONNECT TO EX 20" W AT EX BLIND FLANGE INV 90.8±
(SEE DET THIS SHT)
41+95 BEGIN WELDED STEEL PIPE
41+95 20" VALVE (FLANGE CONNECTION) INV 90.9
42+05 (15.0' RT) ANGLE PT INV 20" W 90.9
42+19.5 (29.5' RT) ANGLE PT INV 20" W 90.9
42+40.65 (29.5' RT) SOUTH PEDESTAL
C/L SOUTH PEDESTAL
42+59.65 (29.5' RT) ANGLE PT INV 20" W 87.00
42+90.65 (29.5' RT) NORTH PEDESTAL
C/L NORTH PEDESTAL
42+90.65 (29.5' RT) ANGLE PT INV 20" W 87.00
43+10.0 (29.5' RT) ANGLE PT INV 20" W 88.8
43+28 END WELDED STEEL PIPE
43+28 20" VALVE (FLANGE CONNECTION) INV 81.4±
ORIGINAL GROUND AT C/L
EX 20" W (APPROX. LOC.)
20" W (C905 PVC)
EX 2" GAS MAIN (APPROX. LOCATION)
PROVIDE FLANGE CONNECTION FOR FUTURE EXTENSION
FUTURE EXTENSION OF CULVERT AT C/L 20" WATER (APPROX. LOCATION)
EX BOX CULVERT AT C/L FAIRVIEW AVE.
42+86.0 TBV INV 20" W 90.6
50+00.0 INV 20" W 90.8
51+00.0 INV 20" W 90.8
53+00 INV 20" W 91.1
CENTERED WITHIN THRUST BLOCK, TYPICAL PIPE WORK POINT TO BE
FINISHED GRADE
#5 STIRRUPS @ 12" O.C. MAX.
2" MIN. (TYP.)
PVC PIPE 20"± I.D.
CENTERLINE PIPE
5'-0" X 5'-0" X 5'-0" THRUST BLOCK
#5 @ 12" O.C. MAX. TOP & BOTTOM
TYPE IV THRUST BLOCK
DEFL. ANGLE 11.25°

PROFILE

SCALE: HORIZONTAL 1" = 40'
VERTICAL 1" = 4'

42+00 43+00 44+00 45+00 46+00 47+00 48+00 49+00 50+00 51+00 52+00 53+00

100 90 80 70

THESE ARE THE FINAL CONSTRUCTION PLANS FOR THE PROJECT WITH THE ADDITIONS NOTED FOR FIELD CHANGES BROUGHT TO THE ATTENTION OF THE ENGINEER BY THE DEVELOPER, CONTRACTOR AND THE CITY ENGINEER.

KENNETH R. TAPPIN RCE 52845
EXP. 12/31/02

8-31-2000
DATE

REGISTERED PROFESSIONAL ENGINEER KENNETH R. TAPPIN 52845 EXP. 12/31/02 CIVIL STATE OF CALIFORNIA

BRENTWOOD
ENGINEERING DEPARTMENT
708 THIRD STREET, BRENTWOOD, CA 94513

cbg Carlson, Barbee & Gibson, Inc.
CIVIL ENGINEERS • SURVEYORS • PLANNERS
2000 CROW CANYON PLACE, SUITE 250
SAN RAMON, CALIFORNIA 94583
TEL (925) 866-0322
FAX (925) 866-8575

IMPROVEMENT PLAN

AD 98-2/CIFP 98-1

FAIRVIEW AVENUE
(42+00 - 53+00)

BRENTWOOD CALIFORNIA

NO.	REVISIONS	BY	APP	DATE
2	ADDED THRUST BLOCK DETAIL & LOCATION	TER		1-22-99
1	REVISED 20"W LINE FROM STA 42+00 TO 43+50	TER		1-6-99

DESIGNED UNDER THE DIRECTION OF:
KENNETH R. TAPPIN
R.C.E. No. 52845 REGISTRATION EXPIRES 12-31-98
9-3-98 DATE

DESIGN: TER DATE: 5-8-98
DRAWN: JOB DATE: 5-8-98
CHECKED: KRT DATE: 5-8-98

REGISTERED PROFESSIONAL ENGINEER KENNETH R. TAPPIN 52845 EXP.12/31/98 CIVIL STATE OF CALIFORNIA

SHEET 13 OF 50 SHEETS

6/21/00 AS BUILT

F:\94453\ACAD\PHASE3\01\P13
JOB NO. 94453-30

CIP 98-0720

CIP 98-0720
Improvement Plan
Special Planning Area 'L'- Plan and Profile- Fairview Ave. (42+00 - 53+00)

LEGEND:

⊠ EXISTING TREE TO BE REMOVED

▒ PAVEMENT WIDENING

CURVE TABLE

NOTE: CURVE NUMBERS ARE SHOWN WITH 'O' ON PLAN.

CURVE	RADIUS	DELTA	LENGTH	DESCRIPTION
1	30.00'	90°00'00"	47.12'	F/C

NOTES;

1. PROVIDE DEPRESSION IN CURB FOR FUTURE DRIVEWAYS AT LOCATIONS SHOWN. DRIVEWAYS AND SIDEWALKS TO BE BUILT AS PART OF FUTURE SUBD.
2. CONSTRUCT DEPRESSION IN CURB FOR FUTURE HANDICAP RAMP (SEE HC RAMP DETAIL ON SHEET 43 FOR LIMIT OF DEPRESSION).
3. CONTRACTOR TO USE CAUTION IN VICINITY OF EXISTING GAS MAIN. (VERIFY LOCATION BEFORE CONSTRUCTION).
4. EXISTING 2" GAS MAIN TO BE ABANDONED FROM STA 55+70± TO STA 60+10± UPON COMPLETION OF NEW 4" GAS MAIN IN JOINT TRENCH. CONTRACTOR TO COORDINATE WITH PG&E.
5. EXISTING 16" ECCID PIPELINE TO BE ABANDONED IN PLACE. REMOVE IF IN CONFLICT WITH PROPOSED IMPROVEMENTS, IF IN EXISTING OR PROPOSED PAVEMENT, OR AT THE DISCRETION OF THE CITY ENGINEER.

DIGALERT
DIAL TOLL FREE 1-800-642-2444
AT LEAST TWO DAYS BEFORE YOU DIG
UNDERGROUND SERVICE ALERT OF NORTHERN CALIFORNIA

FAIRVIEW AVENUE

SCALE: 1" = 40'

EX CROWN	101.06	101.29	101.52	101.72	101.91	102.13	102.36	102.61	102.87	103.08	103.22	103.33	102.75	102.56	102.42	102.28	102.13	101.97	101.76	101.54	101.34	101.15	100.98	100.87	100.76	100.64	100.52	100.47	100.49
EX RT CROSS SLOPE(%)	5.11	4.45	3.94	3.58	3.14	2.77	2.48	2.34	2.26	2.34	2.48	2.63	2.19	2.26	2.85	3.28	2.99	2.55	2.99	3.58	4.09	4.45	4.53	3.94	3.43	3.36	3.28	3.94	5.26
EX RT EP	100.36	100.68	100.98	101.23	101.48	101.75	102.02	102.29	102.56	102.76	102.88	102.97	102.45	102.25	102.03	101.83	101.72	101.62	101.35	101.05	100.78	100.54	100.36	100.33	100.29	100.18	100.07	99.93	99.77
PROPOSED RT CROSS SLOPE(%)	3.09	3.82	4.26	4.12	3.82	3.82	3.82	3.82	3.82	5.00	4.85	4.41	4.12	3.53	2.65	2.06	2.94	3.82	3.38	2.50	2.06	2.06	2.94	3.82	4.56	4.26	3.97	3.24	2.06
PROPOSED RT TC	100.55	100.82	101.09	101.35	101.62	101.89	102.16	102.43	102.70	102.82	102.95	103.07	102.57	102.41	102.25	102.09	101.92	101.76	101.52	101.28	101.04	100.80	100.56	100.47	100.38	100.29	100.20	100.11	100.03

PROPOSED RT TC

PROFILE

SCALE: HORIZONTAL 1" = 40'
VERTICAL 1" = 4'

THESE ARE THE FINAL CONSTRUCTION PLANS FOR THE PROJECT WITH THE ADDITIONS NOTED FOR FIELD CHANGES BROUGHT TO THE ATTENTION OF THE ENGINEER BY THE DEVELOPER, CONTRACTOR, AND THE CITY ENGINEER.

REGISTERED PROFESSIONAL ENGINEER KENNETH R. TAPPIN 52845 EXP. 12/31/02 CIVIL STATE OF CALIFORNIA

[signature] 8-30-2000
KENNETH R. TAPPIN RCE 52845 DATE
EXP. 12/31/02

BRENTWOOD
ENGINEERING DEPARTMENT
708 THIRD STREET, BRENTWOOD, CA 94513

cbg Carlson, Barbee & Gibson, Inc.
CIVIL ENGINEERS • SURVEYORS • PLANNERS
2000 CROW CANYON PLACE, SUITE 250
SAN RAMON, CALIFORNIA 94583
TEL (925) 866-0322
FAX (925) 866-8575

IMPROVEMENT PLAN AD 98-2/CIFP 98-1

FAIRVIEW AVENUE (53+00 - 64+00)

BRENTWOOD CALIFORNIA

NO.	REVISIONS	BY	APP	DATE
2	ADDED THRUST BLOCK LOCATION	TER		1/22/99
1	ADDED WATER SERVICE	TER		10/27/98

DESIGNED UNDER THE DIRECTION OF:
[signature] 9-3-98
KENNETH R. TAPPIN DATE
R.C.E. No. 52845 REGISTRATION EXPIRES 12-31-98

DESIGN: TER	DATE: 5-8-98
DRAWN: JOB	DATE: 5-8-98
CHECKED: KRT	DATE: 5-8-98

REGISTERED PROFESSIONAL ENGINEER KENNETH R. TAPPIN 52845 EXP. 12/31/98 CIVIL STATE OF CALIFORNIA

SHEET 14 OF 50 SHEETS

6/21/00 AS BUILT

F:\94453\ACAD\PHASE30\IP\IP14
JOB NO. 94453-30

CIP 98-0720

CIP 98-0720
Improvement Plan
Special Planning Area 'L'- Plan and Profile- Fairview Ave. (53+00 - 64+00)

LEGEND:

PAVEMENT WIDENING

PAVEMENT OVERLAY

NOTES:

1. PROVIDE DEPRESSION IN CURB FOR FUTURE DRIVEWAYS AT LOCATIONS SHOWN. DRIVEWAYS AND SIDEWALKS TO BE BUILT AS PART OF FUTURE SUBD.
2. CONSTRUCT DEPRESSION IN CURB FOR FUTURE HANDICAP RAMP (SEE HC RAMP DETAIL ON SHEET 43 FOR LIMIT OF DEPRESSION).
3. CONTRACTOR TO USE CAUTION IN VICINITY OF EXISTING GAS MAIN. (VERIFY LOCATION BEFORE CONSTRUCTION).

CURVE TABLE

NOTE: CURVE NUMBERS ARE SHOWN WITH 'O' ON PLAN.

CURVE	RADIUS	DELTA	LENGTH	DESCRIPTION
1	30.00'	90°00'00"	47.12'	F/C

DIGALERT

DIAL TOLL FREE 1-800-642-2444

AT LEAST TWO DAYS BEFORE YOU DIG

UNDERGROUND SERVICE ALERT OF NORTHERN CALIFORNIA

FAIRVIEW AVENUE

SCALE: 1" = 40'

EX CROWN	100.43	100.38	100.30	100.21	100.12	100.04	99.97	99.97	99.84	99.79	99.74	99.67	99.56	99.44	99.34	99.24	99.17	99.11	99.06	99.01	98.97
EX RT CROSS SLOPE(%)	5.26	5.18	4.89	4.60	4.38	4.38	4.45	5.26	5.11	5.18	5.04	4.96	4.74	4.53	4.74	4.89	4.89	4.74	4.82	5.04	5.26
EX RT EP	99.71	99.67	99.63	99.58	99.52	99.44	99.36	99.25	99.14	99.08	99.05	98.99	98.91	98.82	98.69	98.57	98.50	98.46	98.40	98.32	98.25
PROPOSED RT CROSS SLOPE(%)	2.35	2.94	3.38	3.82	3.97	3.97	3.82	3.38	2.79	3.09	3.68	4.12	4.12	4.12	3.53	3.09	3.38	3.97	4.41	4.56	4.85
PROPOSED RT TC	99.95	99.87	99.80	99.72	99.65	99.57	99.50	99.42	99.35	99.27	99.20	99.11	99.03	98.94	98.85	98.76	98.67	98.59	98.50	98.41	98.32

EX CROWN	99.35	99.49	99.62	99.74	99.79	99.81	99.82	99.84	99.85	99.90	99.96	99.95	99.89	99.80	99.64	99.47	99.33	99.19
EX RT CROSS SLOPE(%)	4.31	4.16	4.89	5.55	5.69	5.69	5.62	5.84	4.23	4.16	4.01	4.01	4.09	4.09	4.31	4.38	4.74	5.18
EX RT EP	98.76	98.92	98.95	98.98	99.02	99.07	99.12	99.20	(99.27)	(99.33)	(99.41)	(99.40)	(99.33)	99.24	99.05	98.87	98.68	98.48
PROPOSED RT CROSS SLOPE(%)	3.97	5.00	4.26	3.68	3.09	2.79	2.35	2.50	2.35	2.21	2.21	3.24	3.24	4.71	4.56	4.56	4.56	2.65
PROPOSED RT TC	98.89	98.98	99.06	99.13	99.21	99.28	99.36	99.44	99.51	99.58	99.66	99.58	99.51	99.32	99.14	98.96	98.77	98.70

PROFILE

SCALE: HORIZONTAL 1" = 40' VERTICAL 1" = 4'

THESE ARE THE FINAL CONSTRUCTION PLANS FOR THE PROJECT WITH THE ADDITIONS NOTED FOR FIELD CHANGES BROUGHT TO THE ATTENTION OF THE ENGINEER BY THE DEVELOPER, CONTRACTOR, AND THE CITY ENGINEER.

REGISTERED PROFESSIONAL ENGINEER KENNETH R. TAPPIN 52845 EXP. 12/31/02 CIVIL STATE OF CALIFORNIA

KENNETH R. TAPPIN RCE 52845 EXP. 12/31/02 — 8-30-2000 DATE

CITY OF BRENTWOOD ENGINEERING DEPARTMENT 708 THIRD STREET, BRENTWOOD, CA 94513

cbg Carlson, Barbee & Gibson, Inc. CIVIL ENGINEERS • SURVEYORS • PLANNERS

2000 CROW CANYON PLACE, SUITE 250 SAN RAMON, CALIFORNIA 94583 TEL (925) 866-0322 FAX (925) 866-8575

IMPROVEMENT PLAN AD 98-2/CIFP 98-1

FAIRVIEW AVENUE (64+00 - 75+00)

BRENTWOOD CALIFORNIA

NO.	REVISIONS	BY	APP	DATE
1	ADDED CB 45 & REVISED 48" SD	TER	PEG	10/12/98
2	ADDED WATER SERVICES AND DRIVEWAYS	TER	PEG	10/21/98
3	REVISED 48" SD, DW, SIDEWALK & FH	RIC		3/22/99
4	REVISED WATER SERVICES	DMH		4/5/99

DESIGNED UNDER THE DIRECTION OF:

KENNETH R. TAPPIN R.C.E. No. 52845 REGISTRATION EXPIRES 12-31-98 — 9-3-98 DATE

DESIGN: TER DATE: 5-8-98

DRAWN: JOB DATE: 5-8-98

CHECKED: KRT DATE: 5-8-98

REGISTERED PROFESSIONAL ENGINEER KENNETH R. TAPPIN 52845 EXP. 12/31/98 CIVIL STATE OF CALIFORNIA

SHEET 15 OF 50 SHEETS

6/21/00 AS BUILT

F:\94453\ACAD\PHASE30\IP\IP15 JOB NO. 94453-30

CIP 98-0720

CIP 98-0720 Improvement Plan Special Planning Area 'L'- Plan and Profile- Fairview Ave. (64+00 - 75+00)

LEGEND:

EXISTING PAVEMENT TO BE REMOVED AND REPLACED

PAVEMENT WIDENING

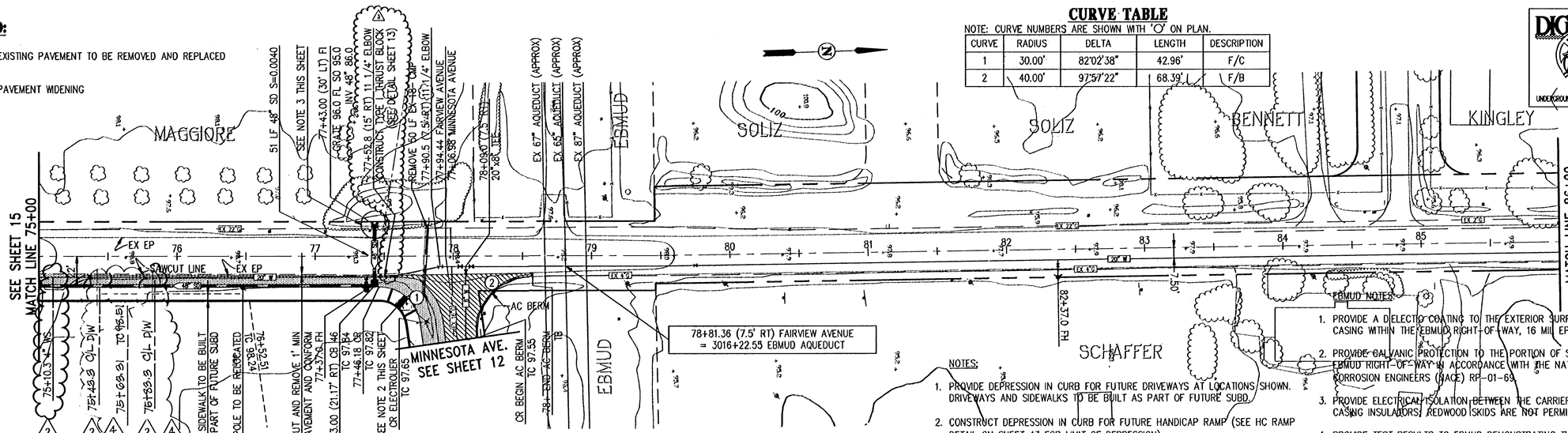

CURVE TABLE

NOTE: CURVE NUMBERS ARE SHOWN WITH 'O' ON PLAN.

CURVE	RADIUS	DELTA	LENGTH	DESCRIPTION
1	30.00'	82°02'38"	42.96'	F/C
2	40.00'	97°57'22"	68.39'	F/B

NOTES:

1. PROVIDE DEPRESSION IN CURB FOR FUTURE DRIVEWAYS AT LOCATIONS SHOWN. DRIVEWAYS AND SIDEWALKS TO BE BUILT AS PART OF FUTURE SUBD.
2. CONSTRUCT DEPRESSION IN CURB FOR FUTURE HANDICAP RAMP (SEE HC RAMP DETAIL ON SHEET 43 FOR LIMIT OF DEPRESSION).
3. CONTRACTOR TO USE CAUTION IN VICINITY OF EXISTING GAS MAIN. (VERIFY LOCATION BEFORE CONSTRUCTION).
4. USE FLANGED CONNECTIONS AT ALL JOINTS, VALVES, TREES, AND ELBOWS FROM STA 77+40 TO STA 79+85.

EBMUD NOTES:

1. PROVIDE A DIELECTRIC COATING TO THE EXTERIOR SURFACE OF THE STEEL CASING WITHIN THE EBMUD RIGHT-OF-WAY, 16 MIL EPOXY OR EQUIVALENT.
2. PROVIDE GALVANIC PROTECTION TO THE PORTION OF STEEL CASING WITHIN THE EBMUD RIGHT-OF-WAY IN ACCORDANCE WITH THE NATIONAL ASSOCIATION OF CORROSION ENGINEERS (NACE) RP-01-69.
3. PROVIDE ELECTRICAL ISOLATION BETWEEN THE CARRIER AND THE CASING USING CASING INSULATORS. REDWOOD SKIDS ARE NOT PERMITTED.
4. PROVIDE TEST RESULTS TO EBMUD DEMONSTRATING THE ADEQUACY OF THE CATHODIC PROTECTION SYSTEM, AND THE ADEQUACY OF THE ELECTRICAL ISOLATION OF THE CARRIER (IF METALLIC) FROM THE CASING. EBMUD RESERVES THE RIGHT TO WITNESS ANY SUCH TESTS.
5. A MINIMUM OF 24 HOURS NOTICE MUST BE GIVEN TO THE DISTRICT BEFORE WORK COMMENCES. CONTACT THE DISTRICT BY TELEPHONE: (209) 463-2463.

DIGALERT
DIAL TOLL FREE
1-800-642-2444
AT LEAST TWO DAYS BEFORE YOU DIG
UNDERGROUND SERVICE ALERT OF NORTHERN CALIFORNIA

FAIRVIEW AVENUE

SCALE: 1"=40'

EX CROWN	99.06	98.94	98.84	98.79	98.73	98.61	98.49	98.38	98.28	98.23		
EX RT CROSS SLOPE(%)	5.04	4.53	4.01	3.80	3.58	3.43	3.21	3.58	4.16	4.01		
EX RT EP	98.37	98.32	98.29	98.27	98.24	98.14	98.05	97.89	97.71	97.68		
PROPOSED RT CROSS SLOPE(%)	2.21	2.50	3.24	3.97	4.71	4.26	4.12	3.53	2.79	4.12		
PROPOSED RT TC	98.62	98.55	98.47	98.40	98.32	98.25	98.17	98.05	97.92	97.80		

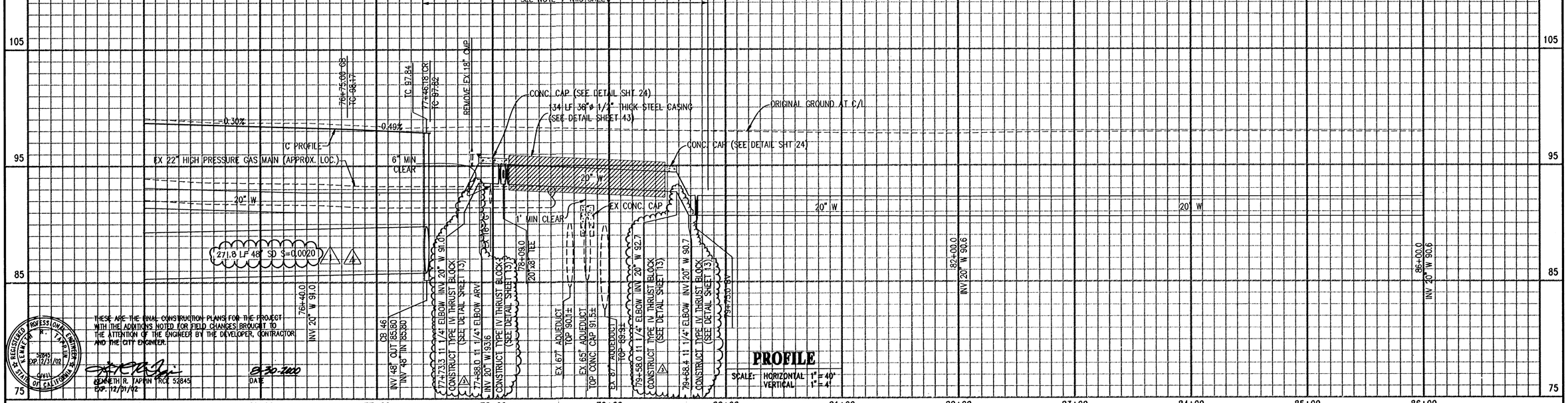

PROFILE

SCALE: HORIZONTAL 1"=40'
VERTICAL 1"=4'

CIP 98-0720
Improvement Plan
Special Planning Area 'L' Plan and Profile- Fairview Ave. (75+00 - 86+00)

ENGINEERING DEPARTMENT
708 THIRD STREET, BRENTWOOD, CA 94513

Carlson, Barbee & Gibson, Inc.
CIVIL ENGINEERS • SURVEYORS • PLANNERS
2000 CROW CANYON PLACE, SUITE 250
SAN RAMON, CALIFORNIA 94583
TEL (925) 866-0322
FAX (925) 866-8575

IMPROVEMENT PLAN

AD 98-2/CIFP 98-1

FAIRVIEW AVENUE (75+00 - 86+00)

BRENTWOOD **CALIFORNIA**

NO.	REVISIONS	BY	APP	DATE
4	REVISED 48" SD AND D/W & LOT LINES	RIC		3/22/99
3	ADDED THRUST BLOCK LOCATIONS	TER		1/22/99
2	ADDED WATER SERVICE AND DRIVEWAYS	TER	BG	10/21/98
1	REVISED 48" SD	TER	BG	10/12/98

DESIGNED UNDER THE DIRECTION OF:
KENNETH R. TAPPIN
R.C.E. No. 52845 REGISTRATION EXPIRES 12-31-98
8-3-98
DATE

DESIGN: TER DATE: 5-8-98
DRAWN: JOB DATE: 5-8-98
CHECKED: KRT DATE: 5-8-98

REGISTERED PROFESSIONAL ENGINEER KENNETH R. TAPPIN 52845 EXP. 12/31/98 CIVIL STATE OF CALIFORNIA

SHEET 16 OF 50 SHEETS

6/21/00 AS BUILT
CIP 98-0720

F:\94453\ACAD\PHASE30\PJP16
JOB NO. 94453-30

DIGALERT
DIAL TOLL FREE
1-800-642-2444
AT LEAST TWO DAYS BEFORE YOU DIG
UNDERGROUND SERVICE ALERT OF NORTHERN CALIFORNIA

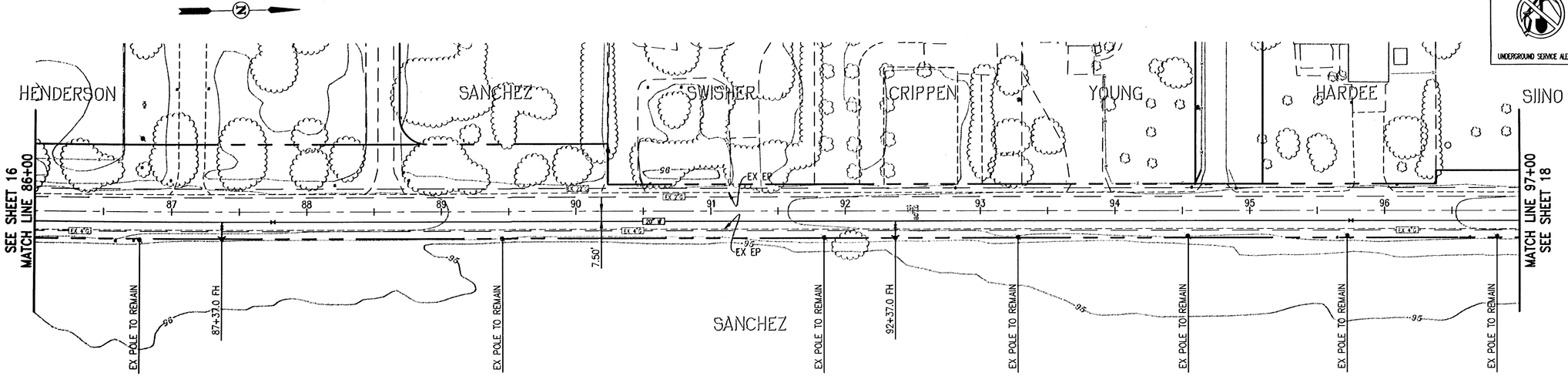

FAIRVIEW AVENUE

SCALE: 1" = 40'

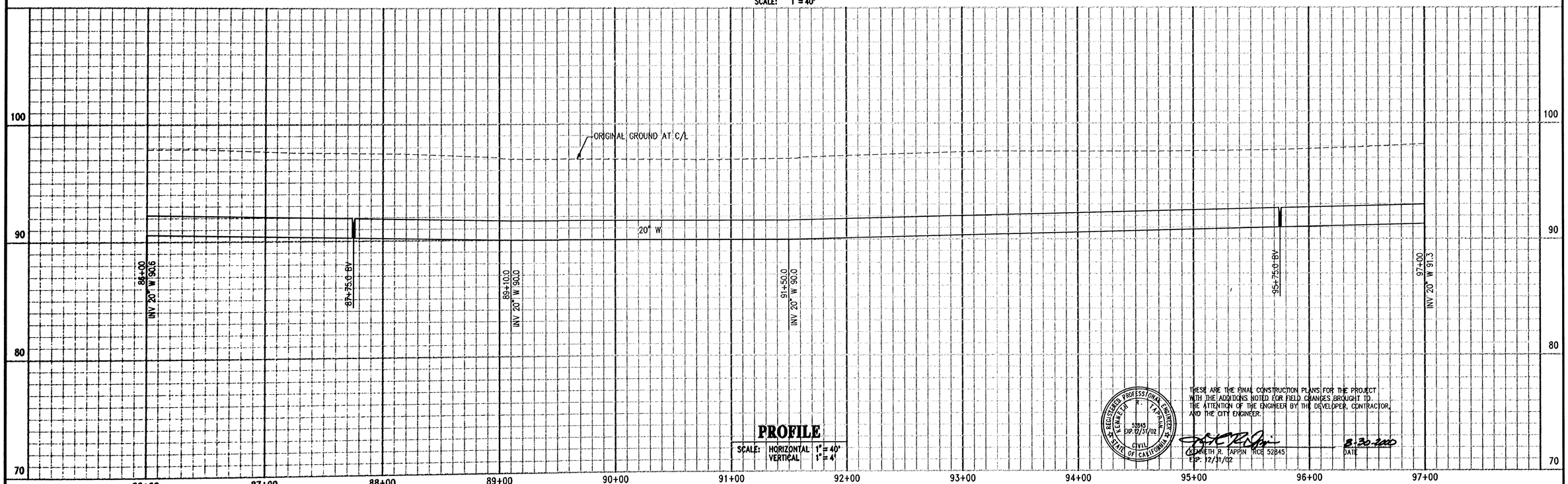

PROFILE

SCALE: HORIZONTAL 1" = 40'
VERTICAL 1" = 4'

REGISTERED PROFESSIONAL ENGINEER — KENNETH R. TAPPIN — 52845 EXP. 12/31/02 — CIVIL — STATE OF CALIFORNIA

THESE ARE THE FINAL CONSTRUCTION PLANS FOR THE PROJECT WITH THE ADDITIONS NOTED FOR FIELD CHANGES BROUGHT TO THE ATTENTION OF THE ENGINEER BY THE DEVELOPER, CONTRACTOR, AND THE CITY ENGINEER.

KENNETH R. TAPPIN RCE 52845 — 8-30-2000 DATE
EXP: 12/31/02

CIP 98-0720
Improvement Plan
Special Planning Area 1 - Phase 3a and
Portion of Phase 3b
Fairview Avenue (86+00 - 97+00)

BRENTWOOD
ENGINEERING DEPARTMENT
708 THIRD STREET, BRENTWOOD, CA 94513

cbg Carlson, Barbee & Gibson, Inc.
CIVIL ENGINEERS • SURVEYORS • PLANNERS
2000 CROW CANYON PLACE, SUITE 250
SAN RAMON, CALIFORNIA 94583
TEL (925) 866-0322
FAX (925) 866-8575

IMPROVEMENT PLAN

AD 98-2/CIFP 98-1

FAIRVIEW AVENUE (86+00 - 97+00)

BRENTWOOD CALIFORNIA

NO.	REVISIONS	BY	APP	DATE

DESIGNED UNDER THE DIRECTION OF:
KENNETH R. TAPPIN — 9.3.98 DATE
R.C.E. No. 52845 REGISTRATION EXPIRES 12-31-98

DESIGN: TER DATE: 5-8-98
DRAWN: JOB DATE: 5-8-98
CHECKED: KRT DATE: 5-8-98

REGISTERED PROFESSIONAL ENGINEER — KENNETH R. TAPPIN — 52845 EXP. 12/31/98 — CIVIL — STATE OF CALIFORNIA

SHEET 17 OF 50 SHEETS

6/21/00 AS BUILT

F:\94453\ACAD\PHASE3O\PIP17
JOB NO. 94453-30

CIP 98-0720

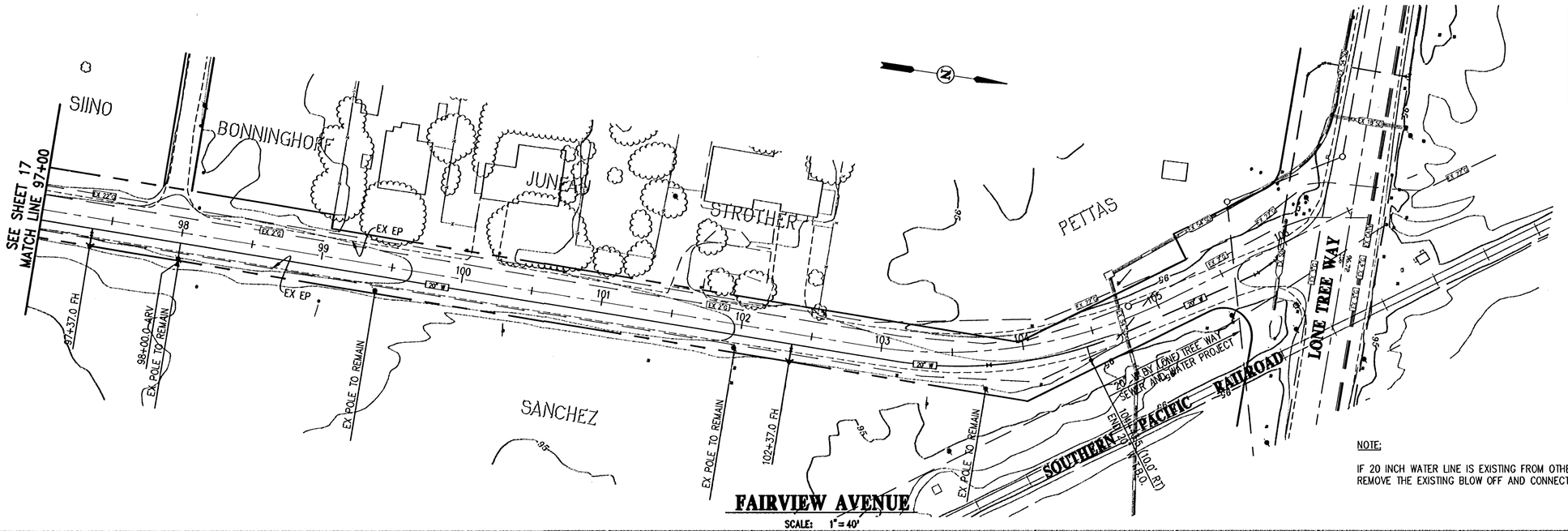

DIG ALERT
DIAL TOLL FREE
1-800-642-2444
AT LEAST TWO DAYS BEFORE YOU DIG
UNDERGROUND SERVICE ALERT OF NORTHERN CALIFORNIA

NOTE:

IF 20 INCH WATER LINE IS EXISTING FROM OTHER PROJECT, CONTRACTOR SHALL REMOVE THE EXISTING BLOW OFF AND CONNECT TO EXISTING MAIN.

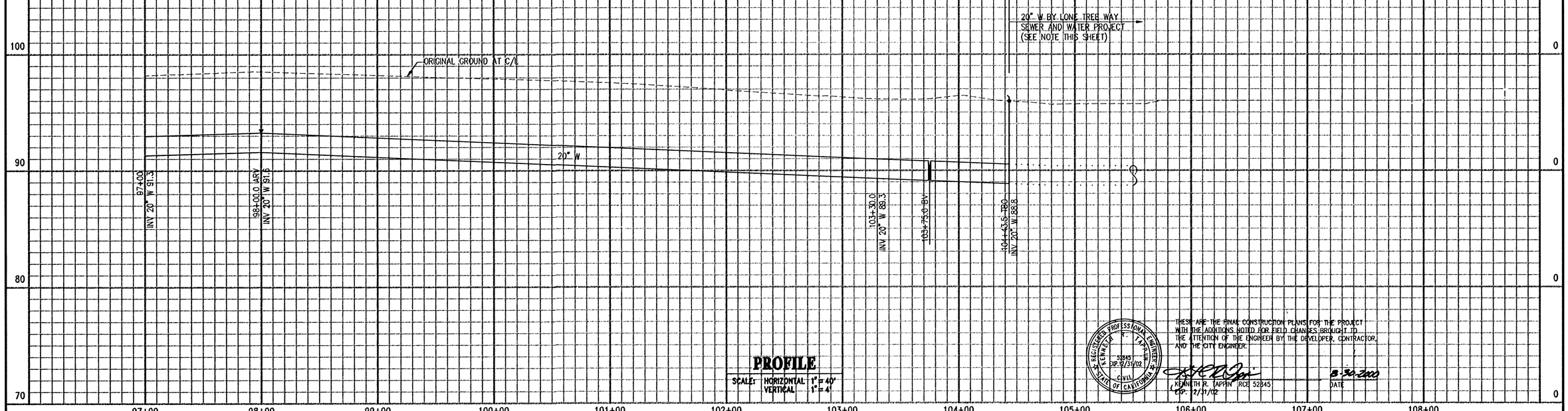

PROFILE
SCALE: HORIZONTAL 1"=40'
VERTICAL 1"=4'

THESE ARE THE FINAL CONSTRUCTION PLANS FOR THE PROJECT WITH THE ADDITIONS NOTED FOR FIELD CHANGES BROUGHT TO THE ATTENTION OF THE ENGINEER BY THE DEVELOPER, CONTRACTOR, AND THE CITY ENGINEER.

KENNETH R. TAPPIN RCE 52845
EXP. 12/31/02

8-20-2000
DATE

REG. CIVIL ENGINEER KENNETH R. TAPPIN 52845 EXP. 12/31/02 CIVIL STATE OF CALIFORNIA

CIP 98-0720
Improvement Plan
Special Planning Area 'L' Plan and Profile- Fairview Ave. (97+00 - 108+00)

BRENTWOOD
ENGINEERING DEPARTMENT
708 THIRD STREET, BRENTWOOD, CA 94513

cbg Carlson, Barbee & Gibson, Inc.
CIVIL ENGINEERS • SURVEYORS • PLANNERS
2000 CROW CANYON PLACE, SUITE 250
SAN RAMON, CALIFORNIA 94583
TEL (925) 866-0322
FAX (925) 866-8575

IMPROVEMENT PLAN AD 98-2/CIFP 98-1

FAIRVIEW AVENUE (97+00 - 108+00)

BRENTWOOD CALIFORNIA

NO.	REVISIONS	BY	APP	DATE

DESIGNED UNDER THE DIRECTION OF:
KENNETH R. TAPPIN
R.C.E. No. 52845 REGISTRATION EXPIRES 12-31-98
9-3-98 DATE

DESIGN: TER	DATE: 5-8-98
DRAWN: JOB	DATE: 5-8-98
CHECKED: KRT	DATE: 5-8-98

REGISTERED PROFESSIONAL ENGINEER KENNETH R. TAPPIN 52845 EXP. 12/31/98 CIVIL STATE OF CALIFORNIA

SHEET 18 OF 50 SHEETS

6/21/00 AS BUILT F:\94453\ACAD\PHASE30\P\P18
JOB NO. 94453-30
CIP 98-0720

NOTE:

1. CONTROL IS CENTERLINE OF SANITARY SEWER.

LEGEND:

⊠ EXISTING TREE TO BE REMOVED

CURVE TABLE

NOTE: CURVE NUMBERS ARE SHOWN WITH 'O' ON PLAN.

CURVE	RADIUS	DELTA	LENGTH	DESCRIPTION
1	60.00'	45°48'17"	47.97'	C/L SD
2	67.17'	45°48'17"	53.70'	C/L SD

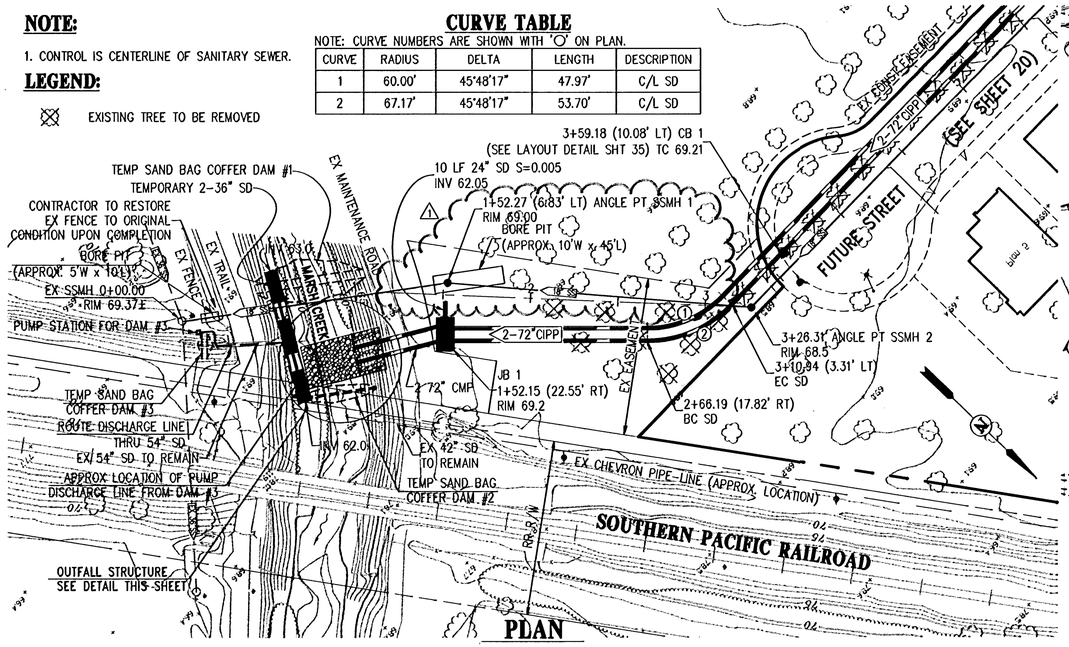

PLAN

SCALE: 1" = 40'

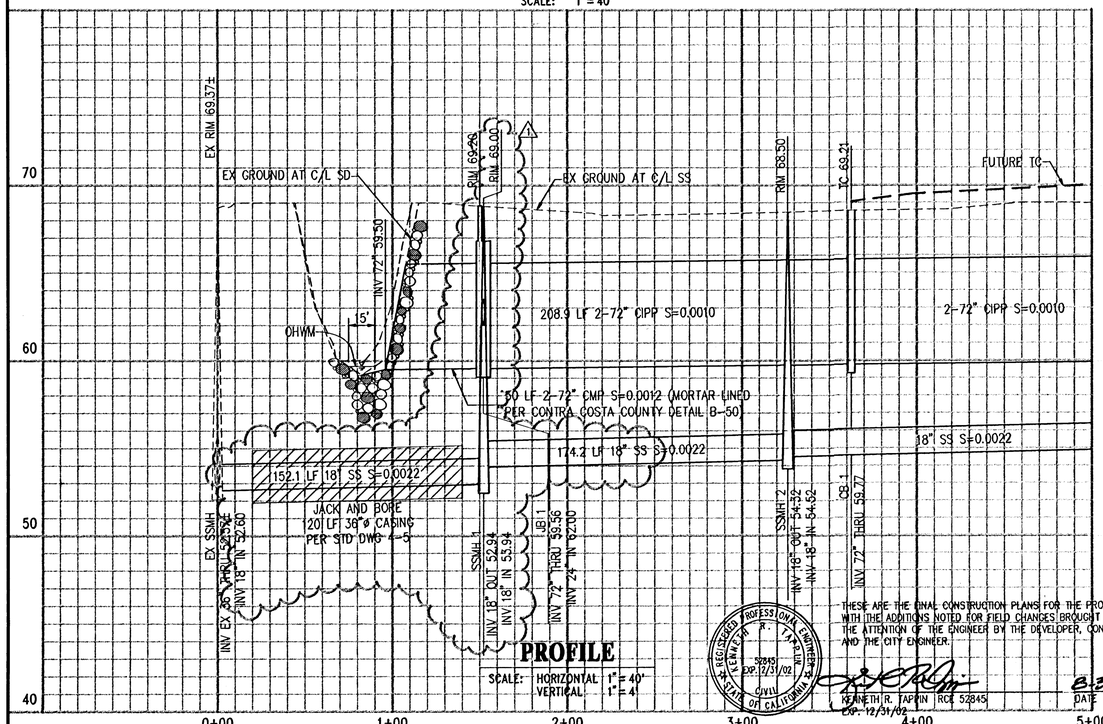

PROFILE

SCALE: HORIZONTAL 1" = 40'
VERTICAL 1" = 4'

THESE ARE THE FINAL CONSTRUCTION PLANS FOR THE PROJECT WITH THE ADDITIONS NOTED FOR FIELD CHANGES BROUGHT TO THE ATTENTION OF THE ENGINEER BY THE DEVELOPER, CONTRACTOR, AND THE CITY ENGINEER.

REGISTERED PROFESSIONAL ENGINEER KENNETH R. TAPPIN No. 52845 EXP. 12/31/02 CIVIL STATE OF CALIFORNIA

KENNETH R. TAPPIN RCE 52845 EXP. 12/31/02 — DATE 8-30-2000

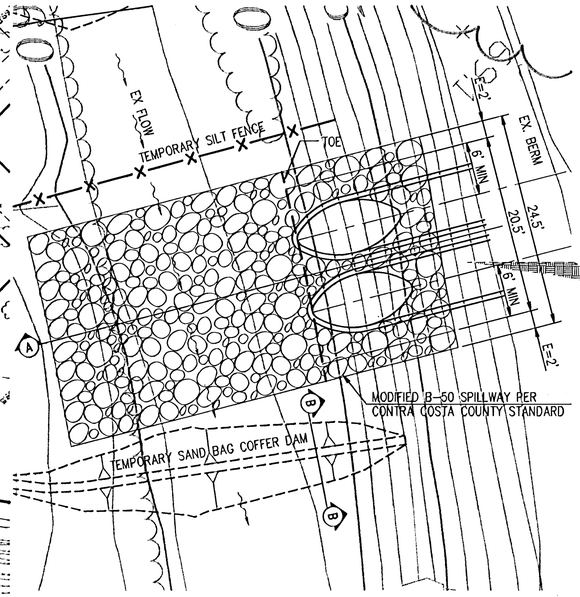

OUTFALL STRUCTURE DETAIL

SCALE: 1" = 8'

STANDARD DETAIL
TRENCH WITH NATIVE BACKFILL

ALTERNATE DETAIL
TRENCH WITH GRAVEL

NOTE:
1. INSPECT AND REPAIR FENCE AFTER EACH STORM EVENT AND REMOVE SEDIMENT WHEN NECESSARY.
2. REMOVED SEDIMENT SHALL BE DEPOSITED TO AN AREA THAT WILL NOT CONTRIBUTE SEDIMENT OFF-SITE AND CAN BE PERMANENTLY STABILIZED.
3. SILT FENCE SHALL BE PLACED ON SLOPE CONTOURS TO MAXIMIZE PONDING EFFICIENCY.

SILT FENCE DETAIL

NOT TO SCALE

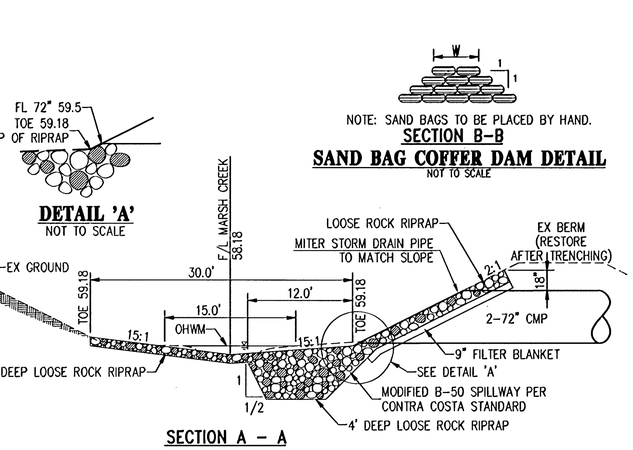

DETAIL 'A'

NOT TO SCALE

NOTE: SAND BAGS TO BE PLACED BY HAND.

SECTION B-B

SAND BAG COFFER DAM DETAIL

NOT TO SCALE

SECTION A – A

NOTES:

1. CONSTRUCTION SCHEDULE OF SPILLWAY TO BE LIMITED TO APRIL 15 TO OCTOBER 15.
2. ORIGINAL CONFIGURATION OF CHANNEL TO BE RESTORED UPON COMPLETION OF CONSTRUCTION.
3. APPROXIMATELY 75 CUBIC YARD OF LOOSE ROCK RIPRAP IS REQUIRED AND WILL BE DISTRIBUTED AS FOLLOWS:
   * 15 CUBIC YARD IN SLOPE BANK
   * 44 CUBIC YARD IN KEYED SECTION AT TOE
   * 16 CUBIC YARD IN REMAINDER OF CHANNEL BOTTOM

   OF THE 60 CUBIC YARD IN THE CHANNEL BOTTOM, APPROXIMATELY 26 CUBIC YARD WILL BE UNDER THE OHWM COVERING AN AREA OF APPROXIMATELY 370 SQUARE FEET (0.0085 ACRE).
4. SURFACE WATER IS TO BE REMOVED FROM THE CONSTRUCTION AREA BY PUMPING TO THE TOP OF BANK BEYOND THE LEVEE. CONTRACTOR SHALL NOT ALLOW BOTTOM SEDIMENTS OR SILT LOADS TO ENTER MARSH CREEK FROM THE CONSTRUCTION AREA.
5. GRADED SLOPES TO BE COMPACTED AND HYDROSEEDED UPON COMPLETION.
6. CONSTRUCTION OF OUTFALL TO BE INSPECTED BY CONTRA COSTA COUNTY FLOOD CONTROL.
7. SEE CONTRA COSTA COUNTY STANDARD B-50 DRAWING AND SPECIFICATIONS FOR OTHER DATA OR DIMENSIONS NOT SHOWN ON THIS DRAWING.
8. ROCKS SHALL BE CLASS FACING, SEE CALTRANS STANDARD SPECIFICATIONS SECTION 72.
9. TEMPORARY 36" STORM DRAIN BY PASS SHALL BE ADS N-12 (OR APPROVED EQUAL) AND ANCHORED TO THE EXISTING GROUND.
10. CONSTRUCT TEMPORARY SAND BAG COFFER DAMS AT LOCATIONS SHOWN. SAND BAG COFFER DAMS TO BE SEALED WITH A LAYER OF VISQUEEN ON OUTSIDE OF WALL. VISQUEEN TO BE ANCHORED TO SAND BAG WALL AND CREEK BANK.
11. ALL SAND BAGS, TEMPORARY STORM DRAINS AND ANCHORS, PUMPS AND DISCHARGE LINES TO BE COMPLETELY REMOVED UPON COMPLETION OF OUTFALL.
12. TEMPORARY SAND BAG COFFER DAM #3 IS TO BLOCK THE FLOW FROM THE EXISTING IRRIGATION RUN-OFF CHANNEL. THE FLOW IS TO BE PUMPED TO COFFER DAM #2. THE AMOUNT OF FLOW VARIES DUE TO IRRIGATION NEEDS. CONTRACTOR TO DETERMINE SIZE OF PUMP AND DISCHARGE LINE NEEDED AND SHOULD TRY TO COORDINATE THE CONSTRUCTION SCHEDULE WITH ECCID FOR MINIMAL IRRIGATION PERIODS. NO BIOLOGICAL RESOURCES WOULD BE IMPACTED BY PUMPING THIS RUN-OFF TO DOWNSTREAM OF THE CONSTRUCTION AREA.
13. COFFER DAM DATA TABLE:

COFFER DAM	TOP ELEV	W	TOTAL SAND BAG MATERIAL (CY)	SAND BAG MATERIAL BELOW OHWM (CY)
1	68.00	5'	200 CY	15 CY
2	63.00	1'	30 CY	7 CY
3	68.00	3'	10 CY	NA

BRENTWOOD
ENGINEERING DEPARTMENT
708 THIRD STREET, BRENTWOOD, CA 94513

cbg Carlson, Barbee & Gibson, Inc.
CIVIL ENGINEERS • SURVEYORS • PLANNERS
2000 CROW CANYON PLACE, SUITE 250
SAN RAMON, CALIFORNIA 94583
TEL (925) 866-0322
FAX (925) 866-8575

IMPROVEMENT PLAN — AD 98-2/CIFP 98-1

PLAN AND PROFILE
STORM DRAIN AND SANITARY SEWER

BRENTWOOD — CALIFORNIA

NO.	REVISIONS	BY	APP	DATE
1	REVISED SEWER LAYOUT & BORE PIT LOCATION	TER		8/25/98

DESIGNED UNDER THE DIRECTION OF:
KENNETH R. TAPPIN — DATE 7-17-98
R.C.E. No. 52845 REGISTRATION EXPIRES 12-31-98
DESIGN: TER — DATE: 5-8-98
DRAWN: JOB — DATE: 5-8-98
CHECKED: KRT — DATE: 5-8-98

REGISTERED PROFESSIONAL ENGINEER KENNETH R. TAPPIN No. 52845 EXP. 12/31/98 CIVIL STATE OF CALIFORNIA

SHEET 19 OF 50 SHEETS

6/21/00 AS BUILT F:\94453\ACAD\PHASE3\0\P\P19
JOB NO. 94453-30
CIP 98-0720

CIP 98-0720
Improvement Plan
Special Planning Area 1, Phase 3
Plan and Profile- Storm Drain and Sanitary Sewer 1

NOTE:

CONTROL IS BASED ON CENTERLINE OF SANITARY SEWER.

LEGEND:

EXISTING TREE TO BE REMOVED

CURVE TABLE

NOTE: CURVE NUMBERS ARE SHOWN WITH 'O' ON PLAN.

CURVE	RADIUS	DELTA	LENGTH	DESCRIPTION
1	60.00'	90°00'00"	94.25'	C/L SD

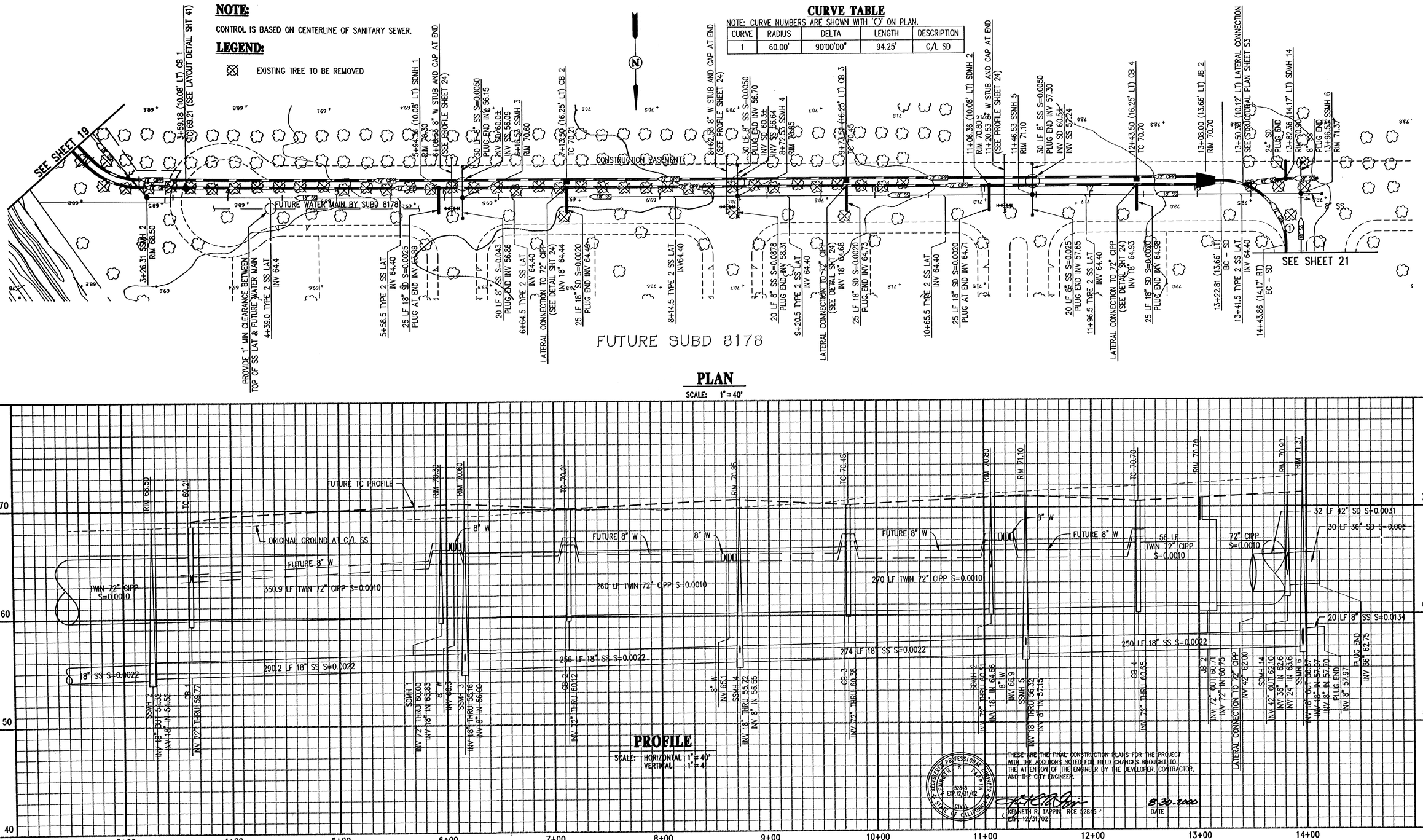

PLAN

SCALE: 1" = 40'

PROFILE

SCALE: HORIZONTAL 1" = 40'
VERTICAL 1" = 4'

THESE ARE THE FINAL CONSTRUCTION PLANS FOR THE PROJECT WITH THE ADDITIONS NOTED FOR FIELD CHANGES BROUGHT TO THE ATTENTION OF THE ENGINEER BY THE DEVELOPER, CONTRACTOR, AND THE CITY ENGINEER.

KENNETH R. TAPPIN RCE 52845
EXP. 12/31/02

8-30-2000
DATE

REGISTERED PROFESSIONAL ENGINEER KENNETH R. TAPPIN 52845 EXP.12/31/02 CIVIL STATE OF CALIFORNIA

CIP 98-0720
Improvement Plan
Special Planning Area L: Plan and Profile Storm Drain and Sanitary Sewer 2

BRENTWOOD
ENGINEERING DEPARTMENT
708 THIRD STREET, BRENTWOOD, CA 94513

cbg Carlson, Barbee & Gibson, Inc.
CIVIL ENGINEERS • SURVEYORS • PLANNERS
2000 CROW CANYON PLACE, SUITE 250
SAN RAMON, CALIFORNIA 94583
TEL (925) 866-0322
FAX (925) 866-8575

IMPROVEMENT PLAN AD 98-2/CIFP 98-1

PLAN AND PROFILE
STORM DRAIN AND SANITARY SEWER

BRENTWOOD CALIFORNIA

NO.	REVISIONS	BY	APP	DATE
1	REVISED WATERMAIN ELEVATIONS	KRT		9/3/98

DESIGNED UNDER THE DIRECTION OF:
KENNETH R. TAPPIN
(R.C.E. No. 52845 REGISTRATION EXPIRES 12-31-98
7-17-98 DATE

DESIGN: TER DATE: 5-8-98
DRAWN: JOB DATE: 5-8-98
CHECKED: KRT DATE: 5-8-98

REGISTERED PROFESSIONAL ENGINEER KENNETH R. TAPPIN 52845 EXP.12/31/98 CIVIL STATE OF CALIFORNIA

SHEET 20 OF 50 SHEETS

6/21/00 AS BUILT F:\94453\ACAD\PHASE30\PJP20
JOB NO. 94453-30
CIP 98-0720

CURVE TABLE

NOTE: CURVE NUMBERS ARE SHOWN WITH 'O' ON PLAN.

CURVE	RADIUS	DELTA	LENGTH	DESCRIPTION
1	300.00'	11°56'55"	62.56'	C/L SS
2	300.00'	13°16'03"	69.47'	C/L SS
3	300.00'	12°41'30"	66.45'	C/L SD
4	300.00'	8°26'45"	44.22'	C/L SD
5	300.00'	8°26'46"	44.22'	C/L SD
6	300.00'	5°43'46"	30.00'	C/L SS
7	210.83'	8°09'10"	30.00'	C/L SD

NOTE:

CONTROL IS BASED ON CENTERLINE OF SANITARY SEWER.

LEGEND:

EXISTING TREE TO BE REMOVED

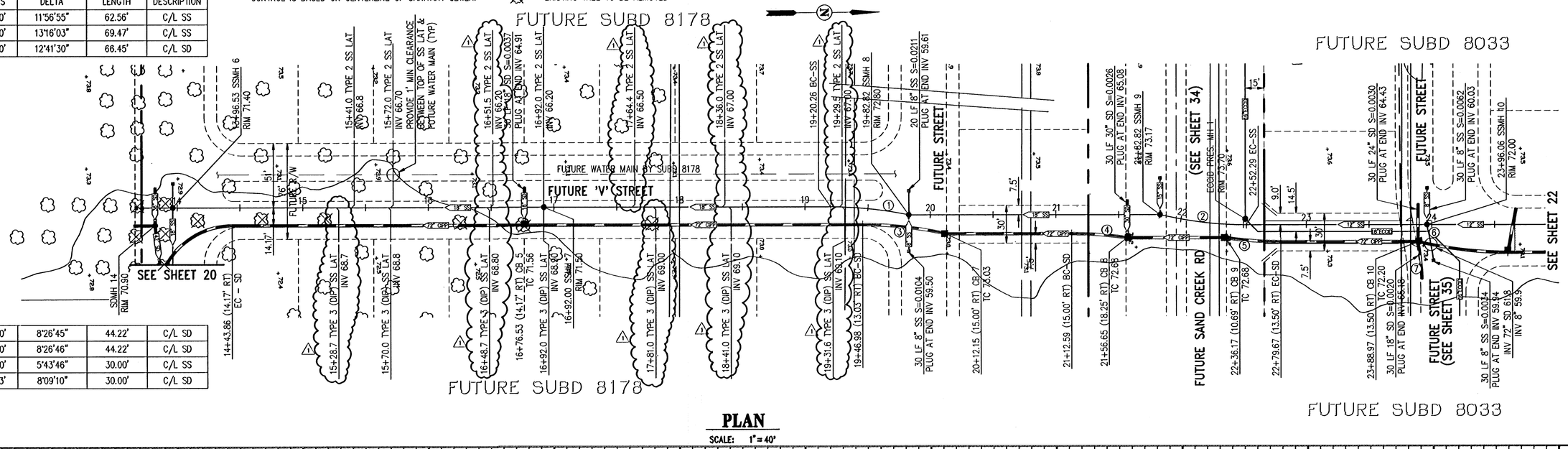

PLAN

SCALE: 1" = 40'

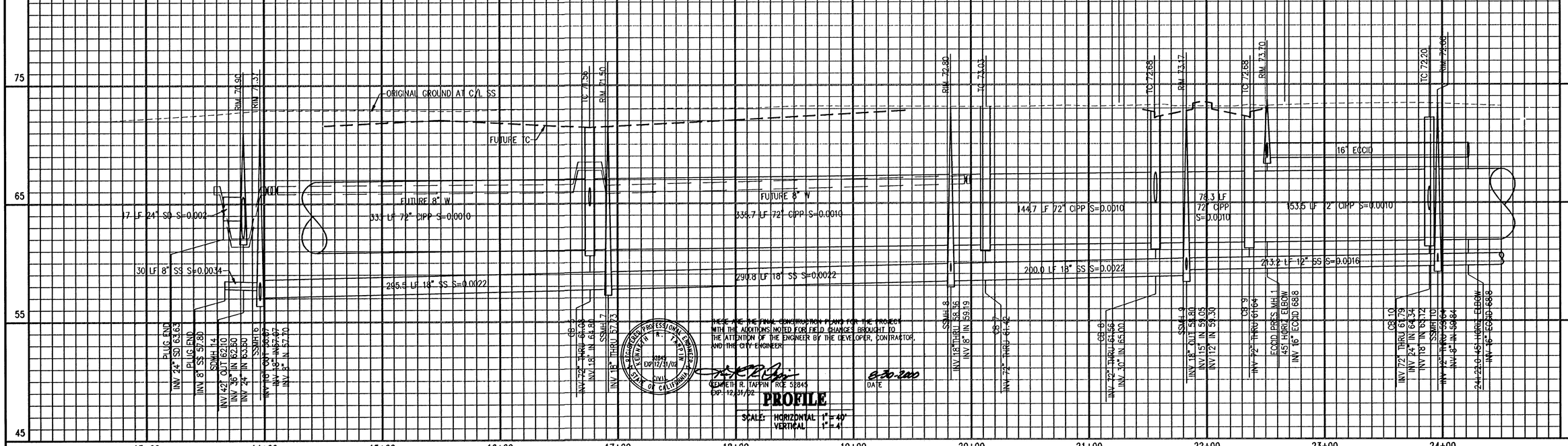

PROFILE

SCALE: HORIZONTAL 1" = 40'
VERTICAL 1" = 4'

PLEASE ARE THE FINAL CONSTRUCTION PLANS FOR THE PROJECT WITH THE ADDITIONS NOTED FOR FIELD CHANGES BROUGHT TO THE ATTENTION OF THE ENGINEER BY THE DEVELOPER, CONTRACTOR, AND THE CITY ENGINEER.

KENNETH R. TAPPIN RCE 52845
EXP. 12/31/02

6-30-2000
DATE

CIP 98-0720
Improvement Plan
Special Projects Section 1 - Plan and Profile- Storm Drain and Sanitary Sewer 3

BRENTWOOD
ENGINEERING DEPARTMENT
708 THIRD STREET, BRENTWOOD, CA 94513

cbg Carlson, Barbee & Gibson, Inc.
CIVIL ENGINEERS • SURVEYORS • PLANNERS
2603 CAMINO RAMON, SUITE 100
SAN RAMON, CALIFORNIA 94583
TEL (925) 866-0322
FAX (925) 866-0575

IMPROVEMENT PLAN AD 98-2/CIFP 98-1

PLAN AND PROFILE
STORM DRAIN AND SANITARY SEWER

BRENTWOOD CALIFORNIA

NO.	REVISIONS	BY	APP	DATE
1	REVISED SEWER LATERAL LOCATIONS	TER		8/25/98

DESIGNED UNDER THE DIRECTION OF:

KENNETH R. TAPPIN DATE
R.C.E. No. 52845 REGISTRATION EXPIRES 12-31-98

DESIGN: TER DATE: 5-8-98
DRAWN: JOB DATE: 5-8-98
CHECKED: KRT DATE: 5-8-98

REGISTERED PROFESSIONAL ENGINEER KENNETH R. TAPPIN 52845 EXP. 12/31/02 CIVIL STATE OF CALIFORNIA

SHEET 21 OF 50 SHEETS

F:\94453\ACAD\PHASE3OU\P\P21
JOB NO. 94453-30

CIP 98-0720

NOTE:
CONTROL IS BASED ON CENTERLINE OF SANITARY SEWER.

CURVE TABLE

NOTE: CURVE NUMBERS ARE SHOWN WITH 'O' ON PLAN.

CURVE	RADIUS	DELTA	LENGTH	DESCRIPTION
1	300.00'	16°39'39"	87.24'	C/L SS
2	300.00'	10°02'25"	52.57'	C/L SS
3	300.00'	13°48'30"	72.30'	C/L SD
4	60.00'	90°00'00"	94.25'	C/L SD
5	300.00'	14°50'06"	77.68'	C/L SD

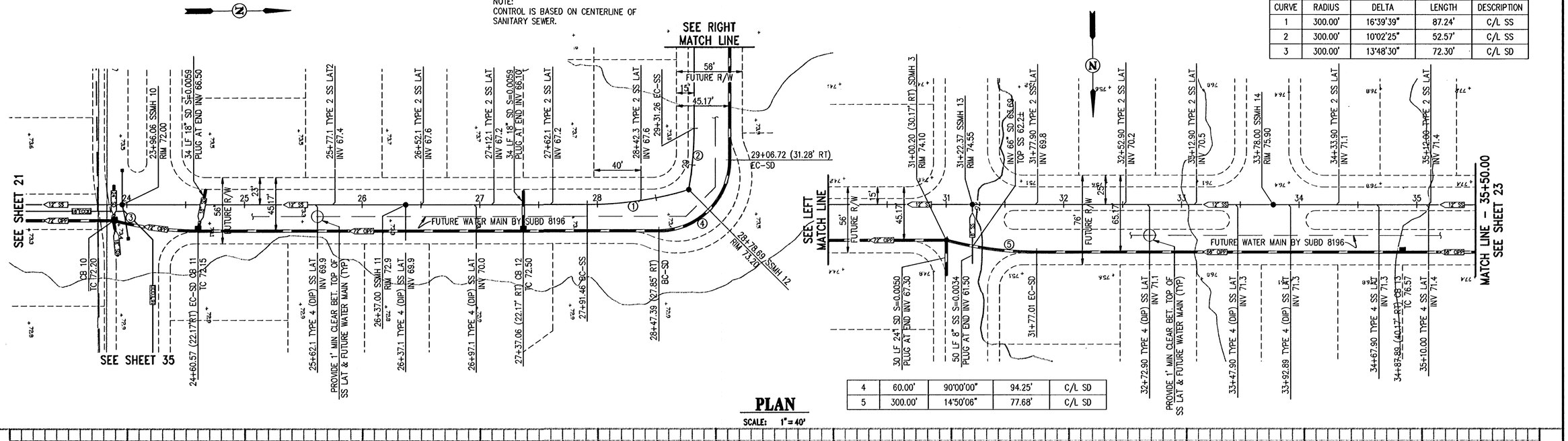

PLAN

SCALE: 1" = 40'

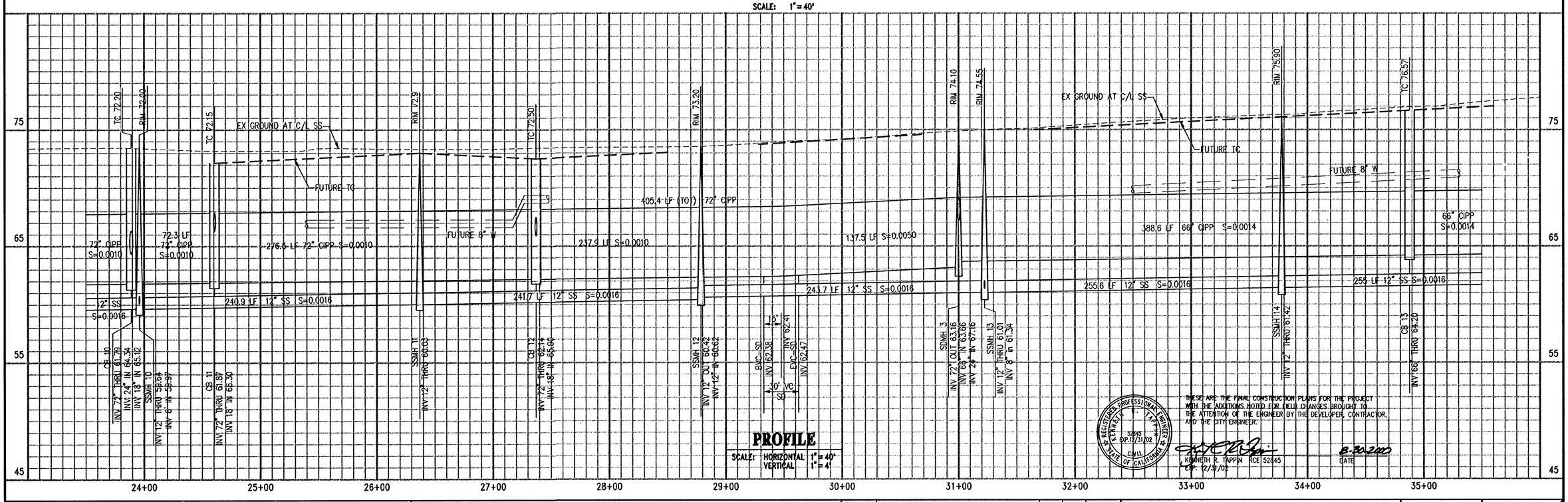

PROFILE

SCALE: HORIZONTAL 1" = 40'
VERTICAL 1" = 4'

THESE ARE THE FINAL CONSTRUCTION PLANS FOR THE PROJECT WITH THE ADDITIONS NOTED FOR FIELD CHANGES BROUGHT TO THE ATTENTION OF THE ENGINEER BY THE DEVELOPER, CONTRACTOR, AND THE CITY ENGINEER.

KENNETH R. TAPPIN RCE 52845
EXP. 12/31/02

8-30-2000
DATE

REGISTERED PROFESSIONAL ENGINEER KENNETH R. TAPPIN 52845 EXP.12/31/02 CIVIL STATE OF CALIFORNIA

BRENTWOOD
ENGINEERING DEPARTMENT
708 THIRD STREET, BRENTWOOD, CA 94513

cbg Carlson, Barbee & Gibson, Inc.
CIVIL ENGINEERS • SURVEYORS • PLANNERS
2000 CROW CANYON PLACE, SUITE 250
SAN RAMON, CALIFORNIA 94583
TEL (925) 866-0322
FAX (925) 866-8575

IMPROVEMENT PLAN — AD 98-2/CIFP 98-1

PLAN AND PROFILE
STORM DRAIN AND SANITARY SEWER

BRENTWOOD — CALIFORNIA

NO.	REVISIONS	BY	APP	DATE

DESIGNED UNDER THE DIRECTION OF:
KENNETH R. TAPPIN — DATE: 7-17-98
R.C.E. No. 52845 REGISTRATION EXPIRES 12-31-98

DESIGN: TER	DATE: 5-8-98
DRAWN: JOB	DATE: 5-8-98
CHECKED: KRT	DATE: 5-8-98

REGISTERED PROFESSIONAL ENGINEER KENNETH R. TAPPIN 52845 EXP.12/31/98 CIVIL STATE OF CALIFORNIA

SHEET 22 OF 50 SHEETS

6/21/00 AS BUILT F:\94453\ACAD\PHASE3OUP\P22
JOB NO. 94453-30

CIP 98-0720

CIP 98-0720
Improvement Plan
Special Planning Area 1 - Plan and Profile- Storm Drain and Sanitary Sewer
Sheet 4

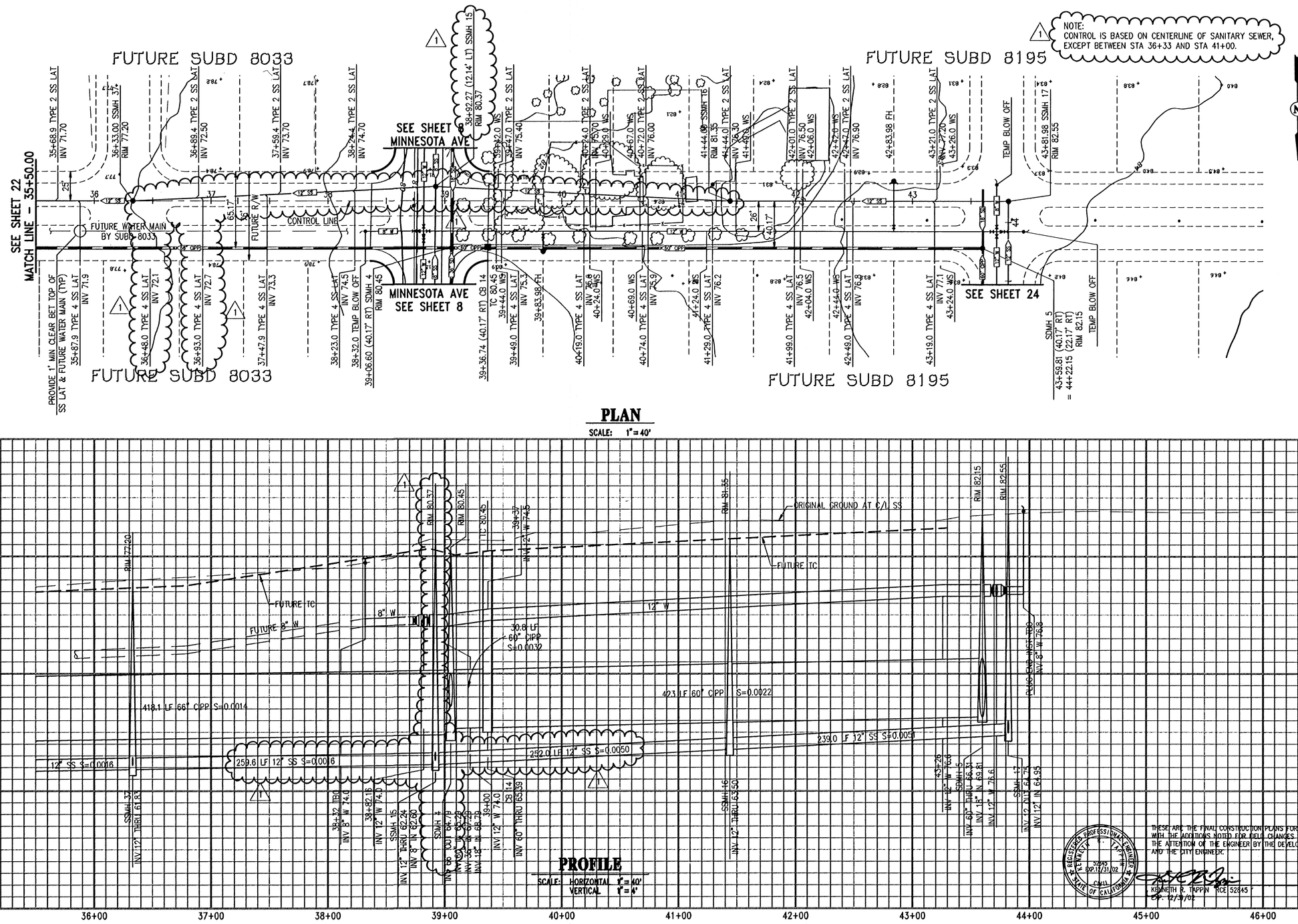

PLAN

SCALE: 1" = 40'

PROFILE

SCALE: HORIZONTAL 1" = 40'
VERTICAL 1" = 4'

THESE ARE THE FINAL CONSTRUCTION PLANS FOR THE PROJECT WITH THE ADDITIONS NOTED FOR FIELD CHANGES BROUGHT TO THE ATTENTION OF THE ENGINEER BY THE DEVELOPER, CONTRACTOR, AND THE CITY ENGINEER.

KENNETH R. TAPPIN RCE 52845 EXP. 12/31/02 — DATE 8-30-2000

CIP 98-0720
Improvement Plan
Special Planning Area 1L- Plan and Profile- Storm Drain and Sanitary Sewer 5

BRENTWOOD
ENGINEERING DEPARTMENT
708 THIRD STREET, BRENTWOOD, CA 94513

cbg Carlson, Barbee & Gibson, Inc.
CIVIL ENGINEERS • SURVEYORS • PLANNERS
2000 CROW CANYON PLACE, SUITE 250
SAN RAMON, CALIFORNIA 94583
TEL (925) 866-0322
FAX (925) 866-8575

IMPROVEMENT PLAN — **AD 98-2/CIFP 98-1**

PLAN AND PROFILE
STORM DRAIN AND SANITARY SEWER

BRENTWOOD — **CALIFORNIA**

NO.	REVISIONS	BY	APP	DATE
1	REVISED SEWER LAYOUT AND LATERAL LOCATIONS	TER		8/25/00

DESIGNED UNDER THE DIRECTION OF: KENNETH R. TAPPIN R.C.E. No. 52845 REGISTRATION EXPIRES 12-31-02 — DATE 7-17-98

DESIGN: TER — DATE: 4-13-99
DRAWN: JOB — DATE: 4-13-99
CHECKED: KRT — DATE: 4-13-99

REGISTERED PROFESSIONAL ENGINEER KENNETH R. TAPPIN 52845 EXP.12/31/02 CIVIL STATE OF CALIFORNIA

SHEET 23 OF 50 SHEETS

6/21/00 AS BUILT

F:\94453\ACAD\PHASE3\UP\JP23
JOB NO. 94453-30

CIP 98-0720

NOTE:
CONTROL IS BASED ON CENTERLINE OF SANITARY SEWER.

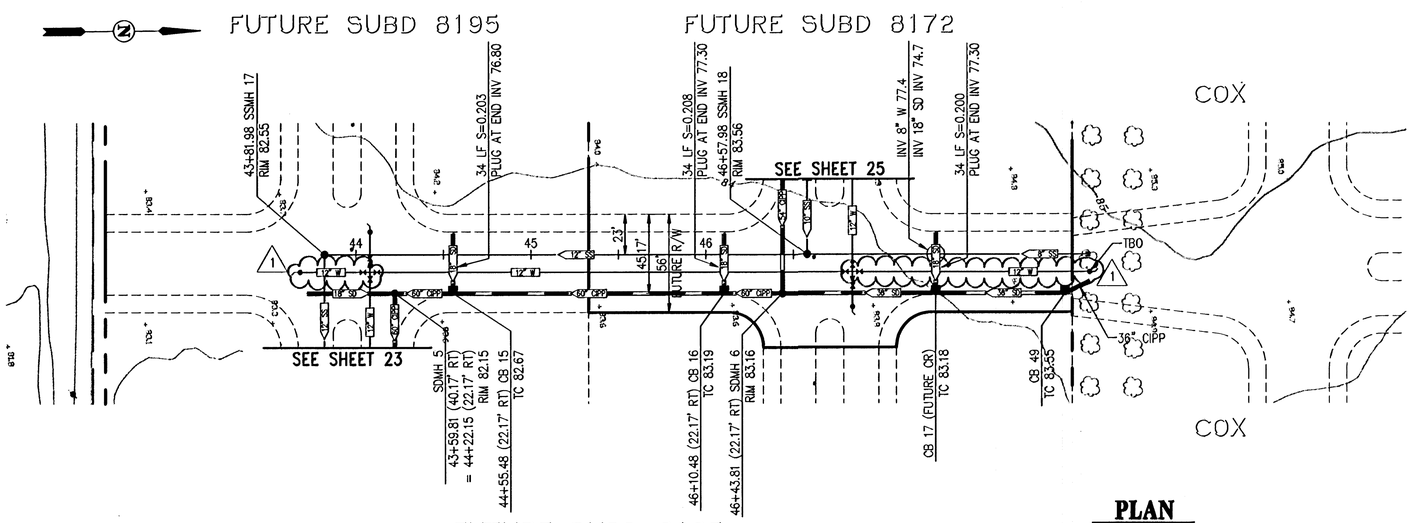

PLAN
SCALE: 1"=40'

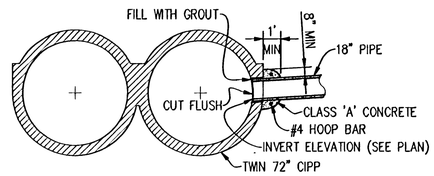

PIPE LATERAL CONNECTION DETAIL
NOT TO SCALE

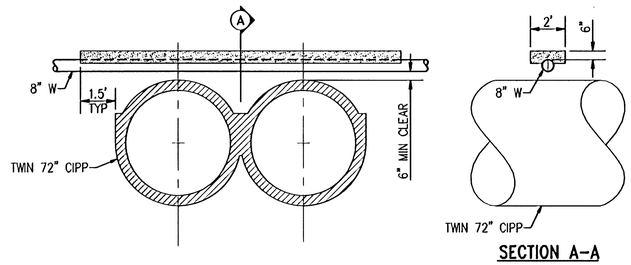

DETAIL CONCRETE CAP
NOT TO SCALE

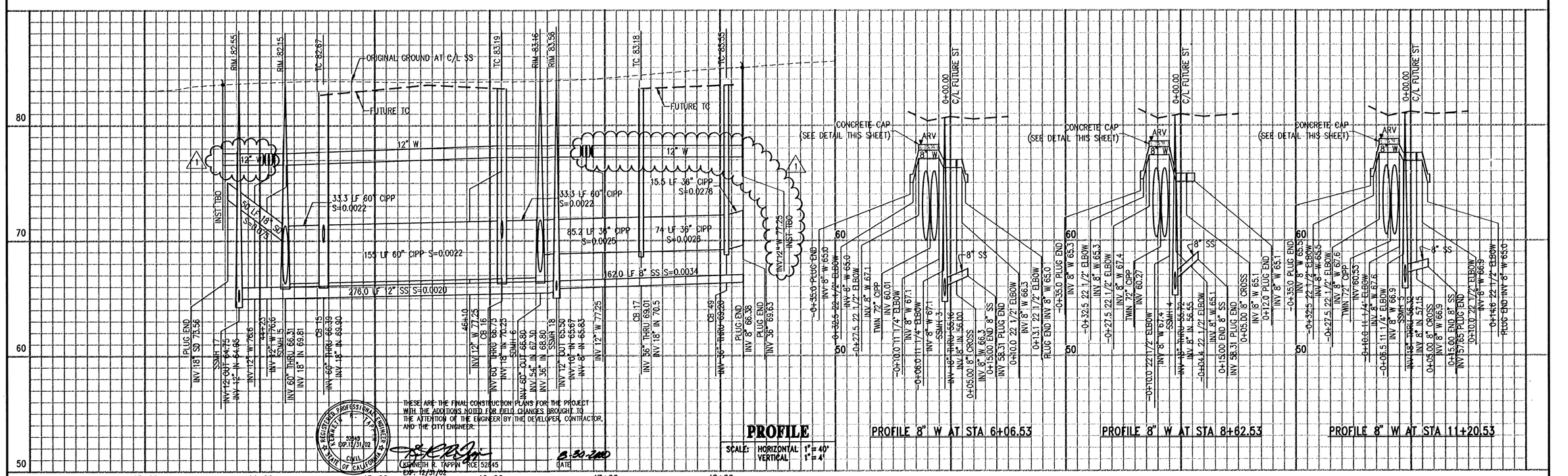

THESE ARE THE FINAL CONSTRUCTION PLANS FOR THE PROJECT WITH THE ADDITIONS NOTED FOR FIELD CHANGES BROUGHT TO THE ATTENTION OF THE ENGINEER BY THE DEVELOPER, CONTRACTOR, AND THE CITY ENGINEER.

KENNETH R. TAPPIN RCE 52845 EXP. 12/31/02 — DATE 8-30-2000

PROFILE
SCALE: HORIZONTAL 1"=40' VERTICAL 1"=4'

PROFILE 8" W AT STA 6+06.53 — PROFILE 8" W AT STA 8+62.53 — PROFILE 8" W AT STA 11+20.53

43+00 44+00 45+00 46+00 47+00 48+00

BRENTWOOD
ENGINEERING DEPARTMENT
708 THIRD STREET, BRENTWOOD, CA 94513

cbg Carlson, Barbee & Gibson, Inc.
CIVIL ENGINEERS • SURVEYORS • PLANNERS
2000 CROW CANYON PLACE, SUITE 250
SAN RAMON, CALIFORNIA 94583
TEL (925) 866-0322
FAX (925) 866-8575

IMPROVEMENT PLAN — AD 98-2/CIFP 98-1

PLAN AND PROFILE
STORM DRAIN AND SANITARY SEWER

BRENTWOOD — CALIFORNIA

NO.	REVISIONS	BY	APP	DATE
1	CHANGED SIZE OF WATER MAIN	TER	[illegible]	10/27/98

DESIGNED UNDER THE DIRECTION OF:
KENNETH R. TAPPIN — DATE 7-17-98
R.C.E. No. 52845 REGISTRATION EXPIRES 12-31-98

DESIGN: TER	DATE: 5-8-98
DRAWN: JOB	DATE: 5-8-98
CHECKED: KRT	DATE: 5-8-98

REGISTERED PROFESSIONAL ENGINEER KENNETH R. TAPPIN 52845 EXP. 12/31/98 CIVIL STATE OF CALIFORNIA

SHEET 24 OF 50 SHEETS

6/21/00 AS BUILT F:\94453\ACAD\PHASE30\IP\IP24
JOB NO. 94453-30
CIP. P98-0720

CIP 98-0720
Improvement Plan
Special Planning Area L- Plan and Profile- Storm Drain and Sanitary Sewer 6

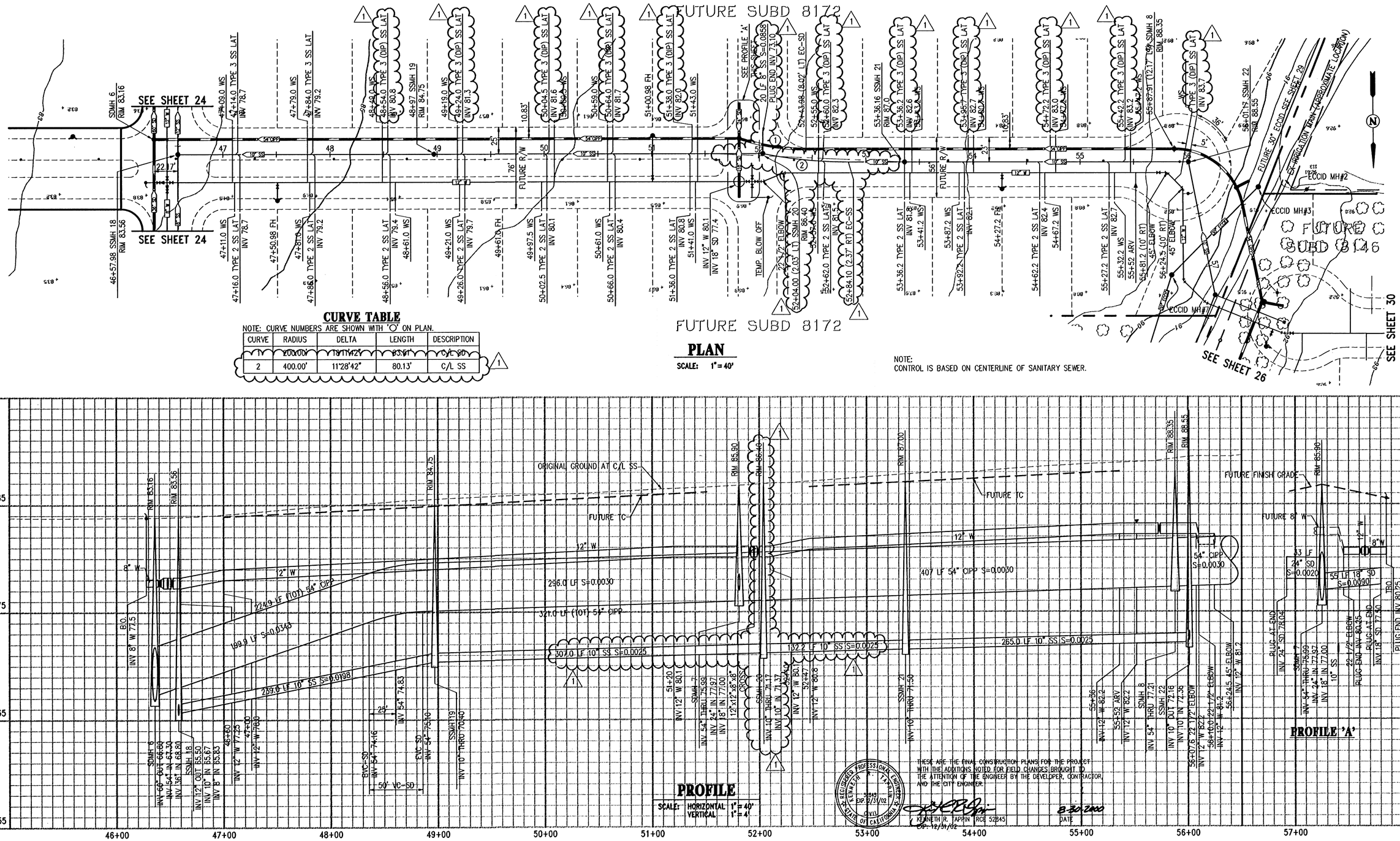

PROFILE
SCALE: HORIZONTAL 1"= 40'
VERTICAL 1"= 4'

THESE ARE THE FINAL CONSTRUCTION PLANS FOR THE PROJECT WITH THE ADDITIONS NOTED FOR FIELD CHANGES BROUGHT TO THE ATTENTION OF THE ENGINEER BY THE DEVELOPER, CONTRACTOR, AND THE CITY ENGINEER.

REGISTERED PROFESSIONAL ENGINEER KENNETH R. TAPPIN No. 52845 EXP. 12/31/02 CIVIL STATE OF CALIFORNIA

KENNETH R. TAPPIN RCE 52845
EXP. 12/31/02

8-30-2000
DATE

CIP 98-0720
Improvement Plan
Special Planning Area 'L' Plan and Profile- Storm Drain and Sanitary Sewer

BRENTWOOD
ENGINEERING DEPARTMENT
708 THIRD STREET, BRENTWOOD, CA 94513

cbg Carlson, Barbee & Gibson, inc.
CIVIL ENGINEERS • SURVEYORS • PLANNERS
2000 CROW CANYON PLACE, SUITE 250
SAN RAMON, CALIFORNIA 94583
TEL (925) 866-0322
FAX (925) 866-8575

IMPROVEMENT PLAN
AD 98-2/CIFP 98-1

PLAN AND PROFILE
STORM DRAIN AND SANITARY SEWER

BRENTWOOD CALIFORNIA

NO.	REVISIONS	BY	APP	DATE
1	REVISED SEWER LAYOUT AND LATERAL TYPES	TER		8/25/98

DESIGNED UNDER THE DIRECTION OF:
KENNETH R. TAPPIN 7-17-98
(LICENSE No. 52845 REGISTRATION EXPIRES 12-31-98 DATE
DESIGN: TER DATE: 5-8-98
DRAWN: JOB DATE: 5-8-98
CHECKED: KRT DATE: 5-8-98

REGISTERED PROFESSIONAL ENGINEER KENNETH R. TAPPIN 52845 EXP.12/31/98 CIVIL STATE OF CALIFORNIA

SHEET 25 OF 50 SHEETS

6/21/00 AS BUILT F:\94453\ACAD\PHASE30\PVP25
JOB NO. 94453.30
CIP 98-0720

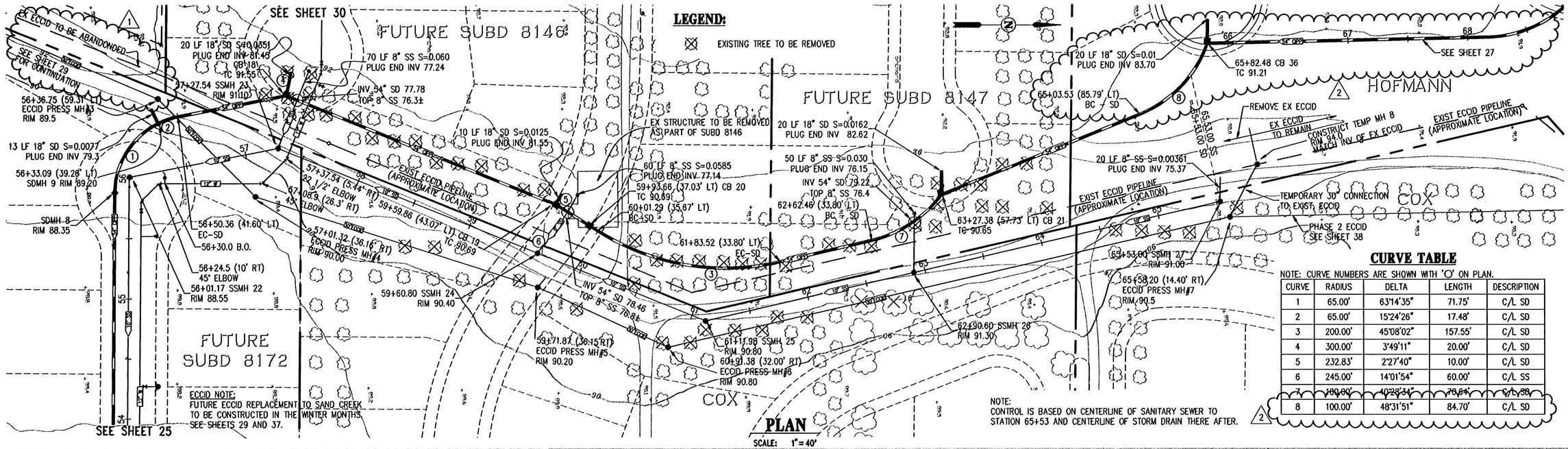

CURVE TABLE

NOTE: CURVE NUMBERS ARE SHOWN WITH 'O' ON PLAN.

CURVE	RADIUS	DELTA	LENGTH	DESCRIPTION
1	65.00'	63°14'35"	71.75'	C/L SD
2	65.00'	15°24'26"	17.48'	C/L SD
3	200.00'	45°08'02"	157.55'	C/L SD
4	300.00'	3°49'11"	20.00'	C/L SD
5	232.83'	2°27'40"	10.00'	C/L SD
6	245.00'	14°01'54"	60.00'	C/L SS
7	100.00'	40°28'34"	70.64'	C/L SD
8	100.00'	48°31'51"	84.70'	C/L SD

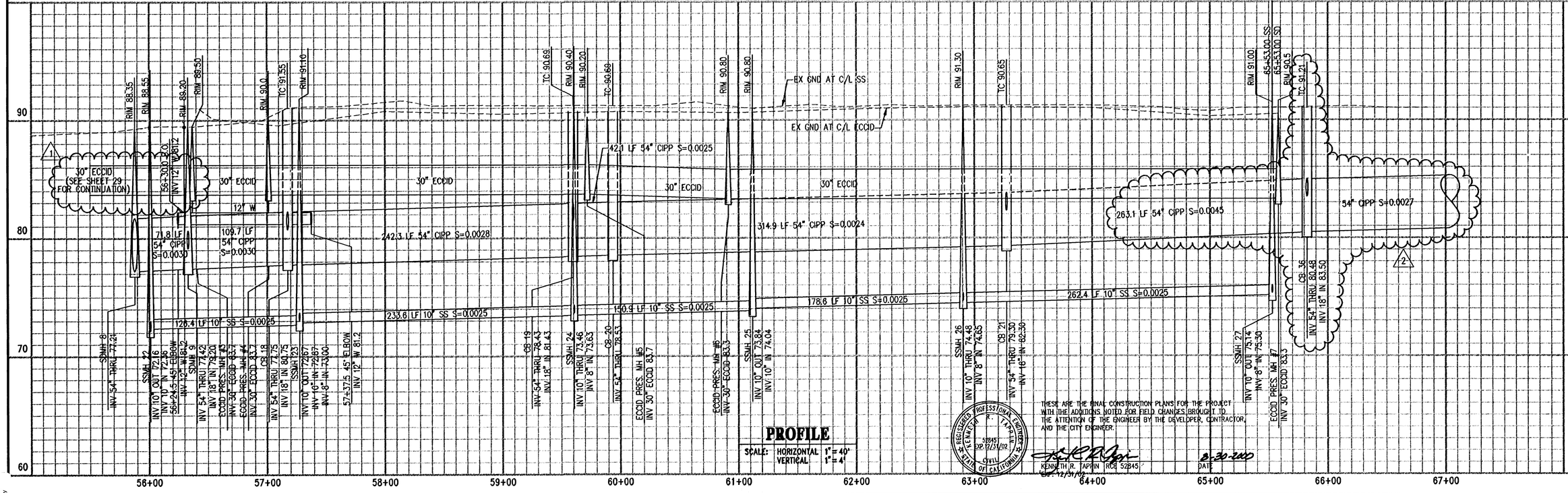

PROFILE

SCALE: HORIZONTAL 1" = 40'
VERTICAL 1" = 4'

THESE ARE THE FINAL CONSTRUCTION PLANS FOR THE PROJECT WITH THE ADDITIONS NOTED FOR FIELD CHANGES BROUGHT TO THE ATTENTION OF THE ENGINEER BY THE DEVELOPER, CONTRACTOR, AND THE CITY ENGINEER.

REGISTERED PROFESSIONAL ENGINEER KENNETH R. TAPPIN 52845 EXP. 12/31/02 CIVIL STATE OF CALIFORNIA

KENNETH R. TAPPIN RCE 52845
EXP. 12/31/02

8-30-2002
DATE

CIP 98-0720
Improvement Plan
Special Planning Area L- Plan and Profile- Storm Drain and Sanitary Sewer A

BRENTWOOD
ENGINEERING DEPARTMENT
708 THIRD STREET, BRENTWOOD, CA 94513

cbg Carlson, Barbee & Gibson, Inc.
CIVIL ENGINEERS • SURVEYORS • PLANNERS
2000 CROW CANYON PLACE, SUITE 250
SAN RAMON, CALIFORNIA 94583
TEL (925) 866-0322
FAX (925) 866-8575

IMPROVEMENT PLAN — AD 98-2/CIFP 98-1

PLAN AND PROFILE
STORM DRAIN AND SANITARY SEWER

BRENTWOOD — CALIFORNIA

NO.	REVISIONS	BY	APP	DATE
1	REVISED ECCID PIPELINE	TER	Rec	8/11/98
2	REVISED STORM DRAIN LINE AT HOFFMAN	TER	Rec	10/13/98

DESIGNED UNDER THE DIRECTION OF:
KENNETH R. TAPPIN
R.C.E. No. 52845 REGISTRATION EXPIRES 12-31-98
DATE 7-17-98

DESIGN: TER DATE: 5-8-98
DRAWN: JOB DATE: 5-8-98
CHECKED: KRT DATE: 5-8-98

REGISTERED PROFESSIONAL ENGINEER KENNETH R. TAPPIN 52845 EXP. 12/31/98 CIVIL STATE OF CALIFORNIA

SHEET 26 OF 50 SHEETS

6/21/00 AS BUILT F:\94453\ACAD\PHASE30\PVP26
JOB NO. 94453-30
CIP 98-0720

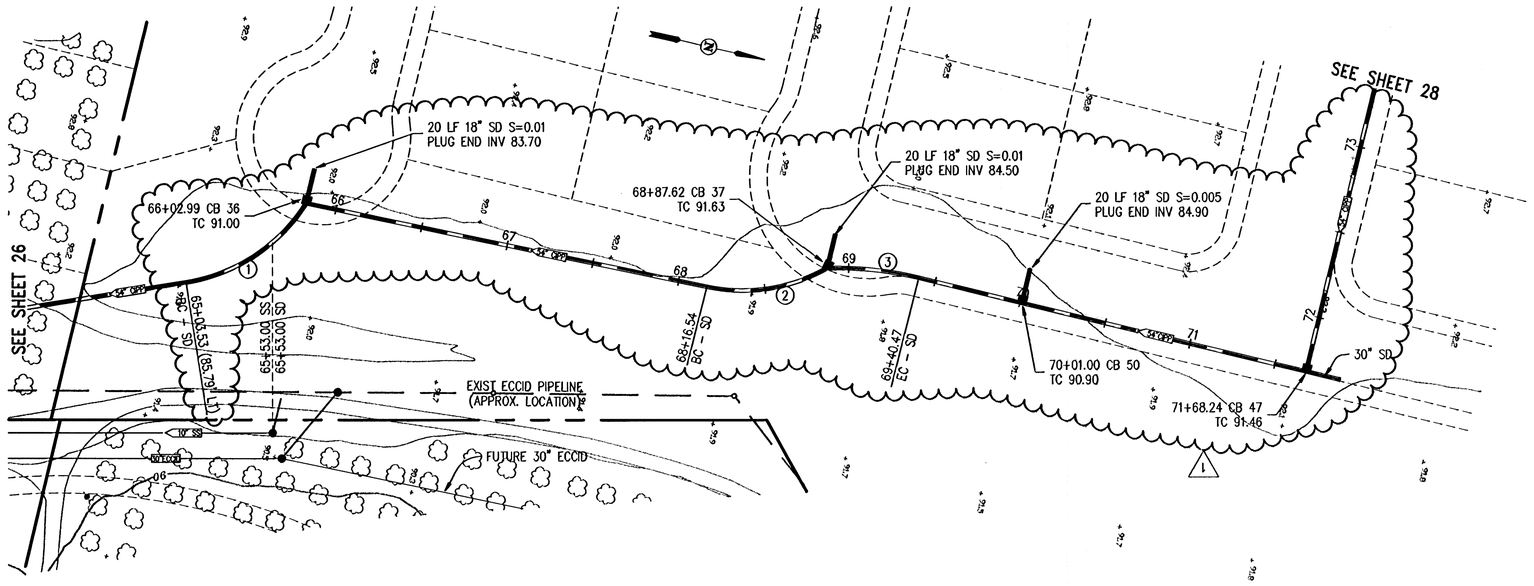

PLAN

SCALE: 1" = 40'

CURVE TABLE

NOTE: CURVE NUMBERS ARE SHOWN WITH 'O' ON PLAN.

CURVE	RADIUS	DELTA	LENGTH	DESCRIPTION
1	100.00'	48°31'51"	84.70'	C/L SD
2	100.00'	40°43'19"	71.07'	C/L SD
3	200.00'	15°08'26"	52.85'	C/L SD

1

NOTES:

1. CONTROL IS BASED ON CENTERLINE OF SANITARY SEWER TO STATION 65+53 AND CENTERLINE OF STORM DRAIN THERE AFTER.
2. FOR THE STORM DRAIN INSTALLATION THROUGH HOFMANN'S FUTURE PROJECT, GRADING PERMITS WILL NOT BE ISSUED. THEREFORE, THE CONTRACTOR SHALL EXCAVATE THE TRENCH, INSTALL THE PIPE, AND BACFILL THE TRENCH TO ORIGINAL GROUND PER CITY STANDARDS. EXCESS SOILS GENERATED FROM THE INSTALLATION OF THE PIPE SHALL BE SPREAD OR STOCPILED.

ECCID NOTES:

FUTURE ECCID REPLACEMENT TO MINNESOTA AVENUE TO BE CONSTRUCTED AS PART OF HOFMANN'S OR PARK IMPROVEMENTS. SEE SHEETS 38 AND 39.

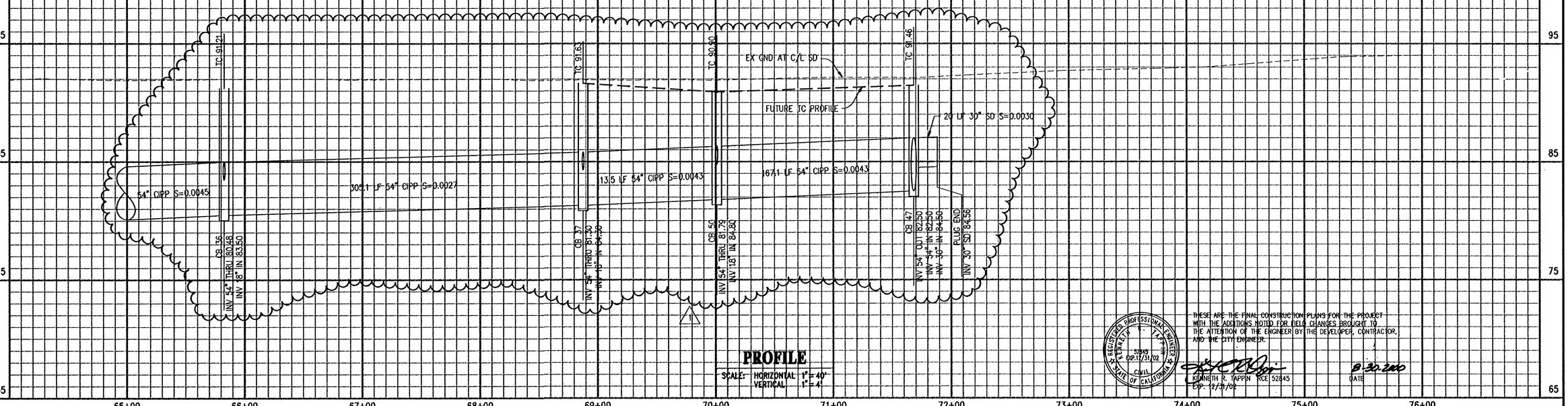

PROFILE

SCALE: HORIZONTAL 1" = 40'
VERTICAL 1" = 4'

1

THESE ARE THE FINAL CONSTRUCTION PLANS FOR THE PROJECT WITH THE ADDITIONS NOTED FOR FIELD CHANGES BROUGHT TO THE ATTENTION OF THE ENGINEER BY THE DEVELOPER, CONTRACTOR, AND THE CITY ENGINEER.

KENNETH R. TAPPIN RCE 52845
EXP. 12/31/02

8-30-2000
DATE

REGISTERED PROFESSIONAL ENGINEER — KENNETH R. TAPPIN — 52845 EXP.12/31/02 — CIVIL — STATE OF CALIFORNIA

CIP 98-0720
Improvement Plan
Special Planning Area 'L' Plan and Profile Storm Drain 1

BRENTWOOD
ENGINEERING DEPARTMENT
708 THIRD STREET, BRENTWOOD, CA 94513

cbg Carlson, Barbee & Gibson, Inc.
CIVIL ENGINEERS • SURVEYORS • PLANNERS
2000 CROW CANYON PLACE, SUITE 250
SAN RAMON, CALIFORNIA 94583
TEL (925) 866-0322
FAX (925) 866-8575

IMPROVEMENT PLAN — **AD 98-2/CIFP 98-1**

PLAN AND PROFILE STORM DRAIN

BRENTWOOD — **CALIFORNIA**

NO.	REVISIONS	BY	APP	DATE
1	REVISED STORM DRAIN LINE AT HOFFMAN	TER	KRT	10/12/98

DESIGNED UNDER THE DIRECTION OF:
KENNETH R. TAPPIN — DATE 2-17-98
LIC. E. No. 52845 REGISTRATION EXPIRES 12-31-98

DESIGN: TER — DATE: 5-8-98
DRAWN: JOB — DATE: 5-8-98
CHECKED: KRT — DATE: 5-8-98

REGISTERED PROFESSIONAL ENGINEER — KENNETH R. TAPPIN — 52845 EXP.12/31/98 — CIVIL — STATE OF CALIFORNIA

SHEET 27 OF 50 SHEETS

6/21/00 AS BUILT F:\94453\ACAD\PHASE30\P\P27
JOB NO. 94453-30
CIP 98-0720

NOTES:

1. CONTRACTOR TO USE CAUTION IN VICINITY OF EXISTING GAS MAIN. (VERIFY LOCATION BEFORE CONSTRUCTION).
2. FOR THE STORM DRAIN INSTALLATION THROUGH HOFMANN'S FUTURE PROJECT, GRADING PERMIT WILL NOT BE ISSUED. THEREFORE, THE CONTRACTOR SHALL EXCAVATE THE TRENCH, INSTALL THE PIPE AND BACKFILL THE TRENCH TO ORIGINAL GROUND PER CITY STANDARDS. EXCESS SOILS GENERATED FROM THE INSTALLATION OF THE PIPE SHALL BE SPREAD OR STOCKPILED.

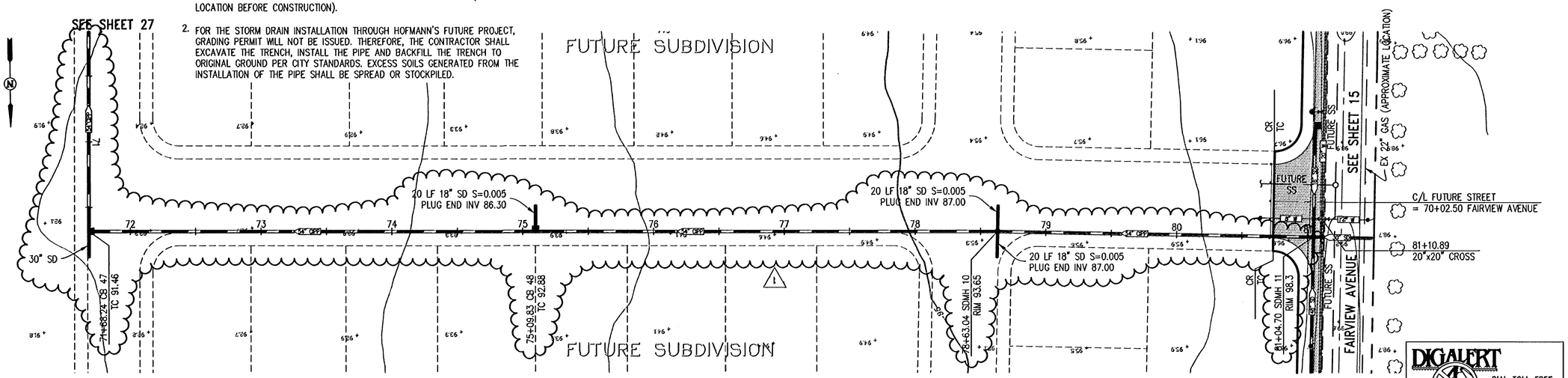

PLAN

SCALE: 1" = 40'

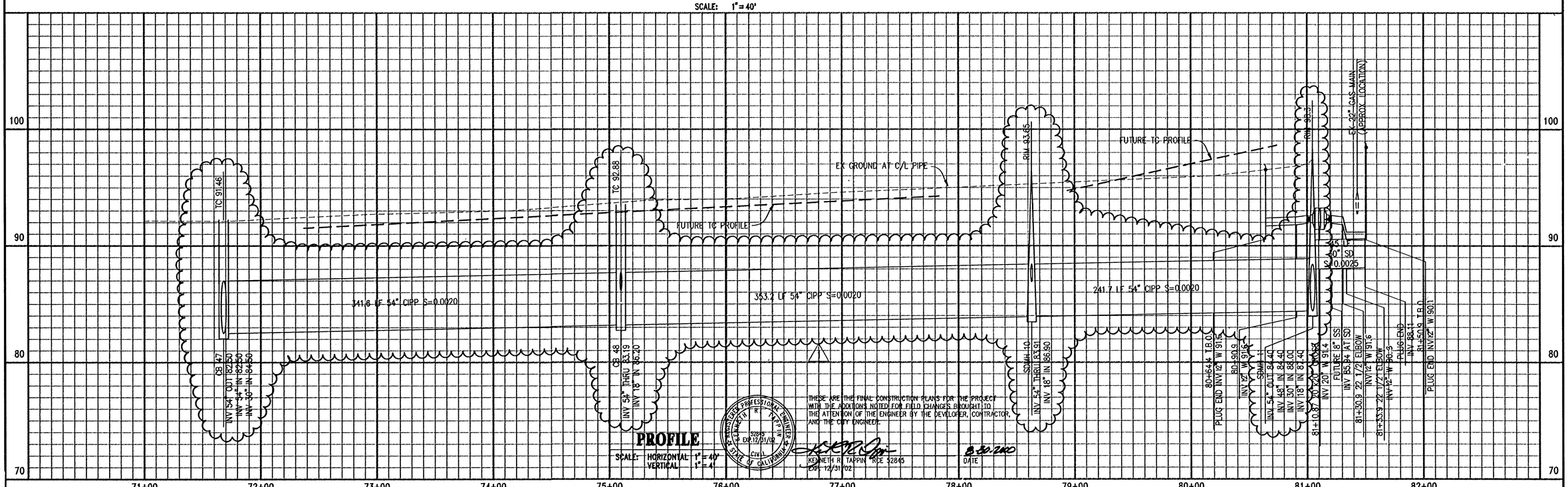

PROFILE

SCALE: HORIZONTAL 1" = 40'
VERTICAL 1" = 4'

THESE ARE THE FINAL CONSTRUCTION PLANS FOR THE PROJECT WITH THE ADDITIONS NOTED FOR FIELD CHANGES BROUGHT TO THE ATTENTION OF THE ENGINEER BY THE DEVELOPER, CONTRACTOR, AND THE CITY ENGINEER.

KENNETH R. TAPPIN, RCE 52845
EXP. 12/31/02

8.30.2000
DATE

REGISTERED PROFESSIONAL ENGINEER — KENNETH R. TAPPIN — 52845 EXP. 12/31/02 — CIVIL — STATE OF CALIFORNIA

DIGALERT
DIAL TOLL FREE
1-800-642-2444
AT LEAST TWO DAYS BEFORE YOU DIG
UNDERGROUND SERVICE ALERT OF NORTHERN CALIFORNIA

CIP 98-0720
Improvement Plan
Special Planning Area 1, Plan and Profile Storm Drain 2

BRENTWOOD
ENGINEERING DEPARTMENT
708 THIRD STREET, BRENTWOOD, CA 94513

cbg Carlson, Barbee & Gibson, Inc.
CIVIL ENGINEERS • SURVEYORS • PLANNERS
2000 CROW CANYON PLACE, SUITE 250
SAN RAMON, CALIFORNIA 94583
TEL (925) 866-0322
FAX (925) 866-8575

IMPROVEMENT PLAN — **AD 98-2/CIFP 98-1**

PLAN AND PROFILE STORM DRAIN

BRENTWOOD — CALIFORNIA

NO.	REVISIONS	BY	APP	DATE
1	REVISED STORM DRAIN LINE AT HOFMANN	TER	[illegible]	10/12/98

DESIGNED UNDER THE DIRECTION OF:
KENNETH R. TAPPIN — DATE 7-17-98
R.C.E. No. 52845 REGISTRATION EXPIRES 12-31-98
DESIGN: TER — DATE: 5-8-98
DRAWN: JOB — DATE: 5-8-98
CHECKED: KRT — DATE: 5-8-98

REGISTERED PROFESSIONAL ENGINEER — KENNETH R. TAPPIN — 52845 EXP. 12/31/98 — CIVIL — STATE OF CALIFORNIA

SHEET 28 OF 50 SHEETS

6/21/00 AS BUILT
F:\94453\ACAD\PHASE30\P\P28
JOB NO. 94453-30
CIP 98-0720

NOTES:

1. PHASE II ECCID FACILITIES TO BE CONSTRUCTED DURING THE WINTER.
2. STATIONING IS ALONG CENTERLINE OF ECCID PIPELINE.
3. ABANDON ECCID FOR PHASE II CONSTRUCTION.
4. REMOVE TEMPORARY MANHOLE FOR PHASE II CONSTRUCTION.
5. THE TIMING OF THE CONSTRUCTION OF PHASE II 30" ECCID PIPELINE AND ABANDONEMENT OF EXISTING ECCID FACILITIES SHALL BE COORDINATED WITH ECCID.

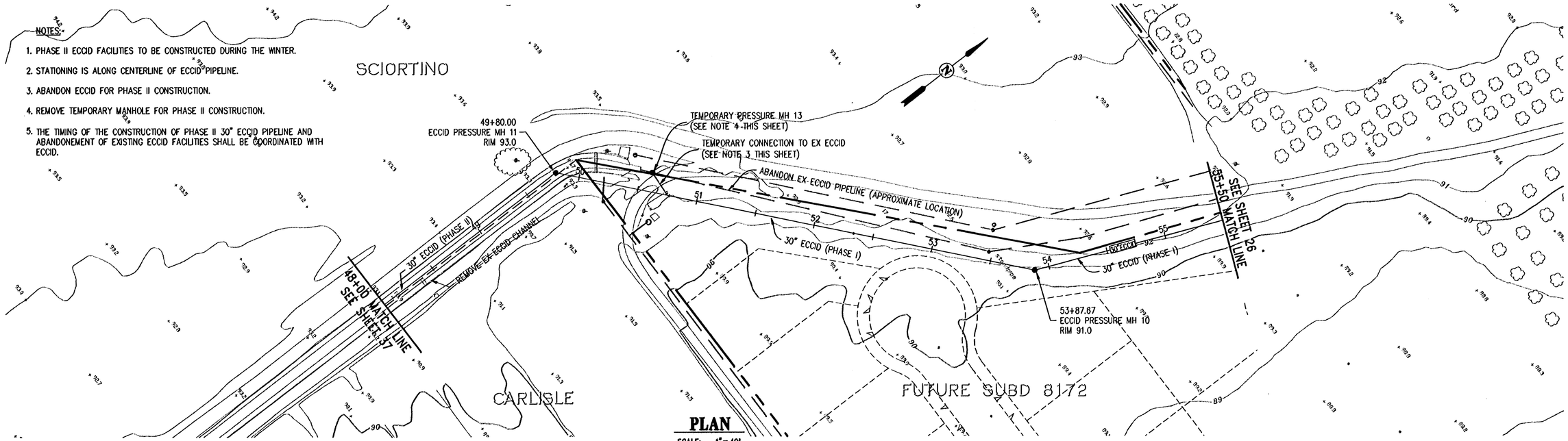

PLAN

SCALE: 1" = 40'

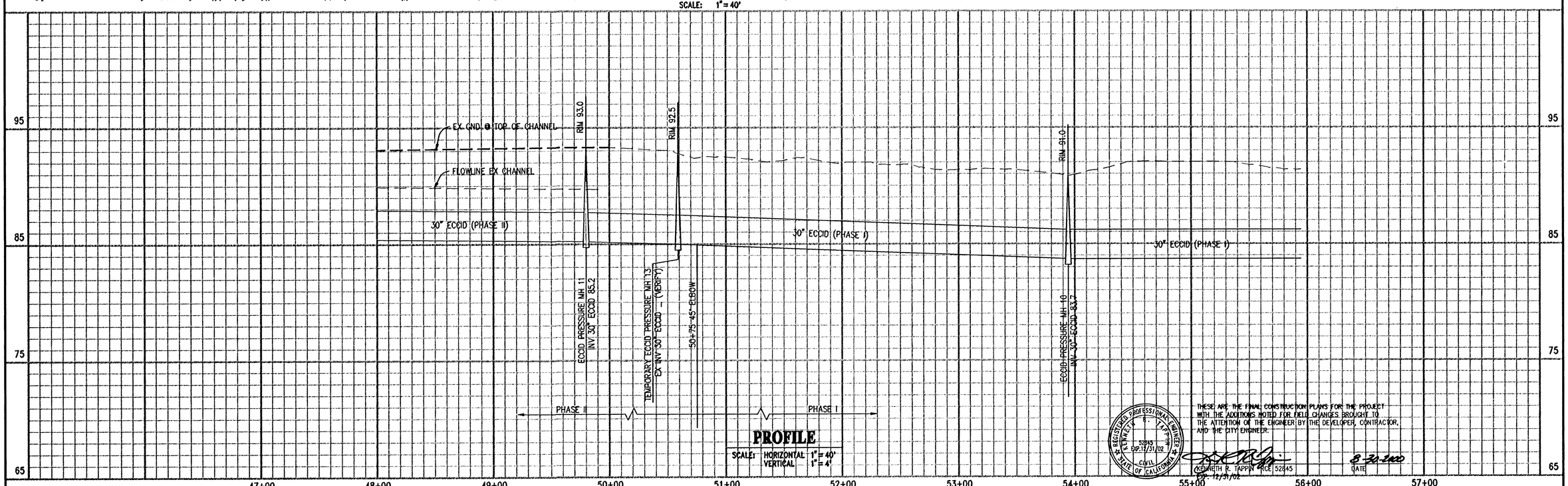

PROFILE

SCALE: HORIZONTAL 1" = 40'
VERTICAL 1" = 4'

THESE ARE THE FINAL CONSTRUCTION PLANS FOR THE PROJECT WITH THE ADDITIONS NOTED FOR FIELD CHANGES BROUGHT TO THE ATTENTION OF THE ENGINEER BY THE DEVELOPER, CONTRACTOR, AND THE CITY ENGINEER.

REGISTERED PROFESSIONAL ENGINEER KENNETH R. TAPPIN 52845 EXP. 12/31/02 CIVIL STATE OF CALIFORNIA

KENNETH R. TAPPIN RCE 52845 EXP. 12/31/02 — DATE 8-30-2000

BRENTWOOD
ENGINEERING DEPARTMENT
708 THIRD STREET, BRENTWOOD, CA 94513

cbg Carlson, Barbee & Gibson, Inc.
CIVIL ENGINEERS • SURVEYORS • PLANNERS
2000 CROW CANYON PLACE, SUITE 250
SAN RAMON, CALIFORNIA 94583
TEL (925) 866-0322
FAX (925) 866-8575

IMPROVEMENT PLAN — AD 98-2/CIFP 98-1

PLAN AND PROFILE IRRIGATION LINE

BRENTWOOD — CALIFORNIA

NO.	REVISIONS	BY	APP	DATE

DESIGNED UNDER THE DIRECTION OF:
KENNETH R. TAPPIN — DATE 9-3-98
R.C.E. No. 52845 REGISTRATION EXPIRES 12-31-98

DESIGN: TER	DATE: 5-8-98
DRAWN: JOB	DATE: 5-8-98
CHECKED: KRT	DATE: 5-8-98

REGISTERED PROFESSIONAL ENGINEER KENNETH R. TAPPIN 52845 EXP. 12/31/98 CIVIL STATE OF CALIFORNIA

SHEET 29 OF 50 SHEETS

6/21/00 AS BUILT

F:\94453\ACAD\PHASE30\IP\IP29
JOB NO. 94453-30

CIP 98-0720

CIP 98-0720
Improvement Plan
Special Planning Area 1- Plan and Profile- Irrigation Line

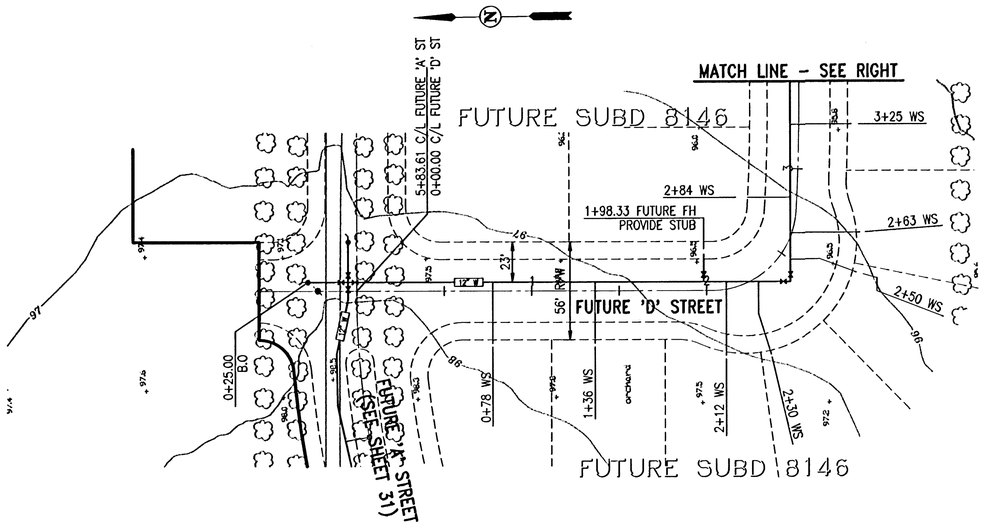

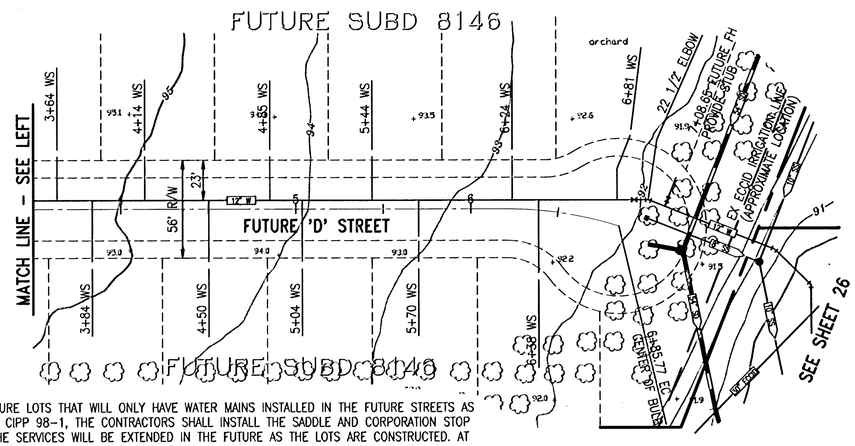

NOTE:
FOR FUTURE LOTS THAT WILL ONLY HAVE WATER MAINS INSTALLED IN THE FUTURE STREETS AS PART OF CIPP 98-1, THE CONTRACTORS SHALL INSTALL THE SADDLE AND CORPORATION STOP ONLY. THE SERVICES WILL BE EXTENDED IN THE FUTURE AS THE LOTS ARE CONSTRUCTED. AT FUTURE FIRE HYDTANT LOCATIONS, THE CONTRACTOR SHALL INSTALL THE TEE, VALVE AND A BLIND FLANGE.

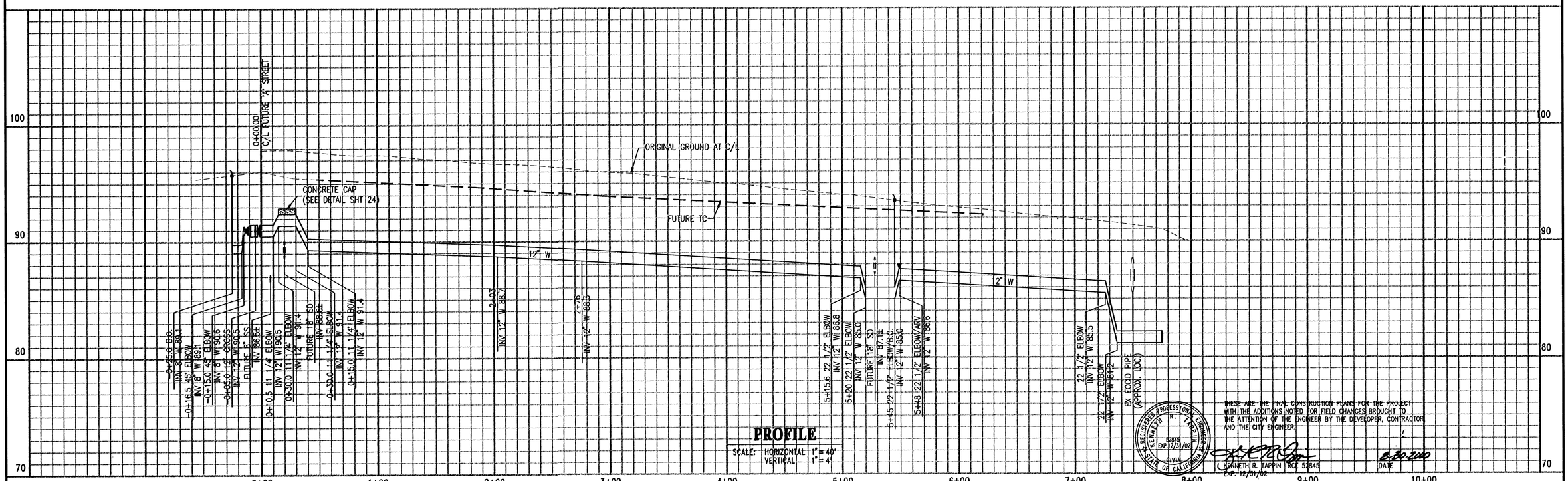

PROFILE
SCALE: HORIZONTAL 1" = 40'
VERTICAL 1" = 4'

THESE ARE THE FINAL CONSTRUCTION PLANS FOR THE PROJECT WITH THE ADDITIONS NOTED OR FIELD CHANGES BROUGHT TO THE ATTENTION OF THE ENGINEER BY THE DEVELOPER, CONTRACTOR AND THE CITY ENGINEER.

KENNETH R. TAPPIN RCE 52845 Exp. 12/31/02 — DATE 6-30-2000

REGISTERED PROFESSIONAL ENGINEER — KENNETH R. TAPPIN — No. 52845 EXP. 12/31/02 — CIVIL — STATE OF CALIFORNIA

BRENTWOOD
ENGINEERING DEPARTMENT
708 THIRD STREET, BRENTWOOD, CA 94513

cbg Carlson, Barbee & Gibson, Inc.
CIVIL ENGINEERS • SURVEYORS • PLANNERS
2000 CROW CANYON PLACE, SUITE 250
SAN RAMON, CALIFORNIA 94583
TEL (925) 866-0322
FAX (925) 866-8575

IMPROVEMENT PLAN — AD 98-2/CIFP 98-1

PLAN AND PROFILE
12" WATER

BRENTWOOD — CALIFORNIA

NO.	REVISIONS	BY	APP	DATE

DESIGNED UNDER THE DIRECTION OF:
KENNETH R. TAPPIN — DATE 2-17-98
R.C.E. NO. 52845 REGISTRATION EXPIRES 12-31-98

DESIGN: TER	DATE: 5-8-98
DRAWN: JOB	DATE: 5-8-98
CHECKED: KRT	DATE: 5-8-98

SHEET 30 OF 50 SHEETS

6/21/00 AS BUILT

F:\94453\ACAD\PHASE30\PLP30
JOB NO. 94453-30

CIP 98-0720

CIP 98-0720
Improvement Plan
Special Planning Area 'L' Plan and Profile- 12" Water Main 1

CURVE TABLE

NOTE: CURVE NUMBERS ARE SHOWN WITH 'O' ON PLAN.

CURVE	RADIUS	DELTA	LENGTH	DESCRIPTION
1	300.00'	13°43'20"	71.85'	C/L W

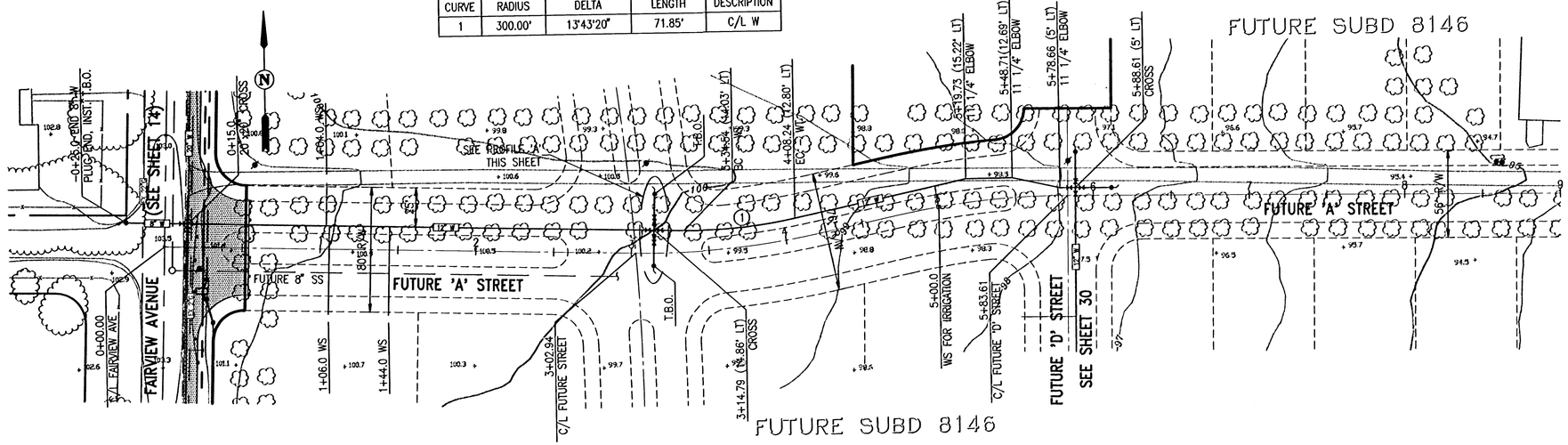

PLAN

SCALE: 1" = 40'

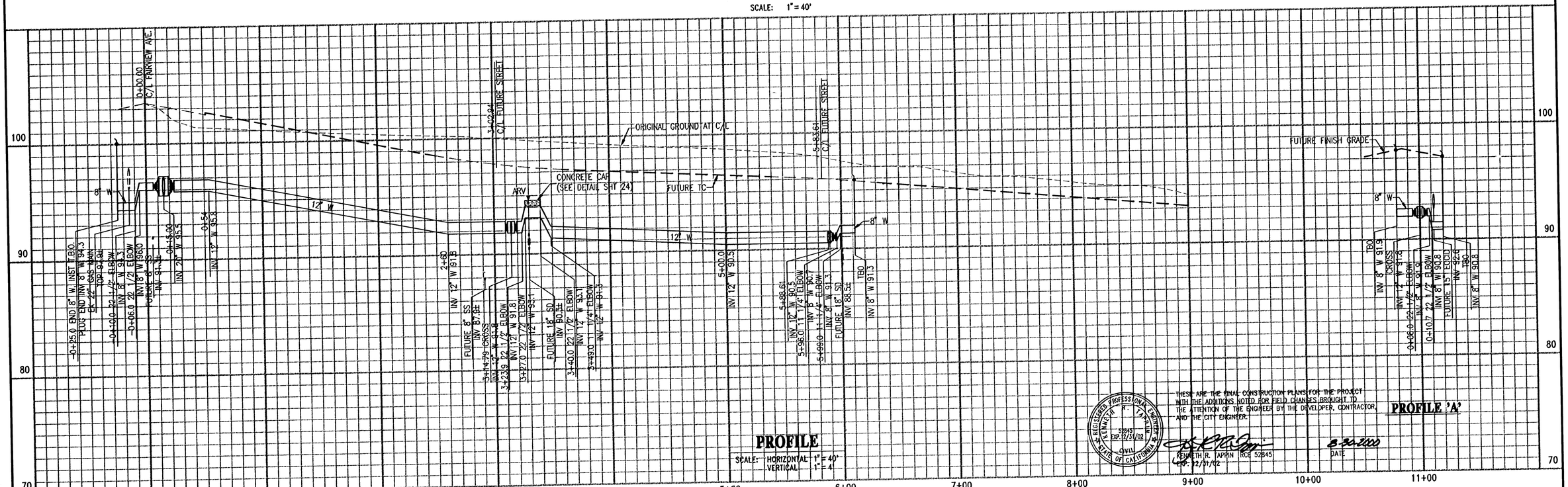

PROFILE

SCALE: HORIZONTAL 1" = 40'
VERTICAL 1" = 4'

PROFILE 'A'

NOTES:

1. FOR FUTURE LOTS THAT WILL ONLY HAVE WATER MAINS INSTALLED IN THE FUTURE STREETS AS PART OF CIPP 98-1, THE CONTRACTORS SHALL INSTALL THE SADDLE AND CORPORATION STOP ONLY. THE SERVICES WILL BE EXTENDED IN THE FUTURE AS THE LOTS ARE CONSTRUCTED. AT FUTURE FIRE HYDRANT LOCATIONS, THE CONTRACTOR SHALL INSTALL THE TEE, VALVE AND A BLIND FLANGE.
2. CONTRACTOR TO USE CAUTION IN VICINITY OF EXISTING GAS MAIN. (VERIFY LOCATION BEFORE CONSTRUCTION).

DIGALERT
DIAL TOLL FREE
1-800-642-2444
AT LEAST TWO DAYS BEFORE YOU DIG
UNDERGROUND SERVICE ALERT OF NORTHERN CALIFORNIA

THESE ARE THE FINAL CONSTRUCTION PLANS FOR THE PROJECT WITH THE ADDITIONS NOTED FOR FIELD CHANGES BROUGHT TO THE ATTENTION OF THE ENGINEER BY THE DEVELOPER, CONTRACTOR, AND THE CITY ENGINEER.

REGISTERED PROFESSIONAL ENGINEER KENNETH R. TAPPIN 52845 EXP. 12/31/02 CIVIL STATE OF CALIFORNIA

KENNETH R. TAPPIN RCE 52845
EXP: 12/31/02

8-30-2000
DATE

CIP 98-0720
Improvement Plan
Special Provisions, Plan and Profile- 12" Water Main 2

BRENTWOOD
ENGINEERING DEPARTMENT
708 THIRD STREET, BRENTWOOD, CA 94513

cbg Carlson, Barbee & Gibson, Inc.
CIVIL ENGINEERS • SURVEYORS • PLANNERS
2000 CROW CANYON PLACE, SUITE 250
SAN RAMON, CALIFORNIA 94583
TEL (925) 866-0322
FAX (925) 866-8575

IMPROVEMENT PLAN

PLAN AND PROFILE 12" WATER MAIN

BRENTWOOD CALIFORNIA

AD 98-2/CIFP 98-1

NO.	REVISIONS	BY	APP	DATE

DESIGNED UNDER THE DIRECTION OF:
KENNETH R. TAPPIN
R.C.E. No. 52845 REGISTRATION EXPIRES 12-31-98
DATE 7-17-98

DESIGN: TER DATE: 5-8-98
DRAWN: JOB DATE: 5-8-98
CHECKED: KRT DATE: 5-8-98

REGISTERED PROFESSIONAL ENGINEER KENNETH R. TAPPIN 52845 EXP. 12/31/98 CIVIL STATE OF CALIFORNIA

SHEET 31 OF 50 SHEETS

6/21/00 AS BUILT F:\94453\ACAD\PHASE30\PIP31
JOB NO. 94453-30

CIPP 98-0720

ECCID MATERIALS;

METER; WATER SPECIALTIES LP-03 FLANGED TUBE METER. 5" DIAMETER

INLINE GATES; WATERMAN H-30 OR APPROVED EQUAL. VALVES ARE DOWNSTREAM OF METER.

VAULTS; CHRISTY "R" SERIES PITS WITH HINGED CHECKER TRAFFIC LIDS. VAULTS TO ENCLOSE BOTH METER AND VALVE AND EXTENDED BELOW INVERT OF PIPE.

ALFALFA VALVE; 4 INCH WATERMAN ALFALFA VALVE 150.

AIR RELIEF VALVE; AIR RELIEF BALL VALVE

MANHOLE; CITY STANDARD MANHOLE

PRESSURE MANHOLE; SEE DETAIL THIS SHEET

PRESSURE MANHOLE FRAME AND COVER SHALL BE 24" HEAVY DUTY TYPE. THE COVERS ARE TO UTILIZE A FLAT (1/8"x 1/2") GASKET ON THE HORIZONTAL FACE OF THE FRAME/COVER INTERFACE.

SUPPLIED BY:
CALIFORNIA CONCRETE PIPE
2960 SO. HWY. 99
STOCKTON, CA 95205
(209)466-4212

THE COVER MUST BE BOLTED TO THE FRAME AND BE EASY TO REMOVE TO PREVENT THE FRAME AND COVER FROM BEING LIFTED BY INTERNAL WATER PRESSURE. IT MUST BE CONNECTED IN A POSITIVE FASHION TO THE UNDERLYING CONCRETE MANHOLE.

EACH COVER SHALL HAVE A RAISED, WELD-BEADED "ECCID" (3" LETTERS) WELDED ON ITS TOP FOR IDENTIFICATION. THE DISTRICT SHALL BE PROVIDED WITH 14 SPARE GASKETS.

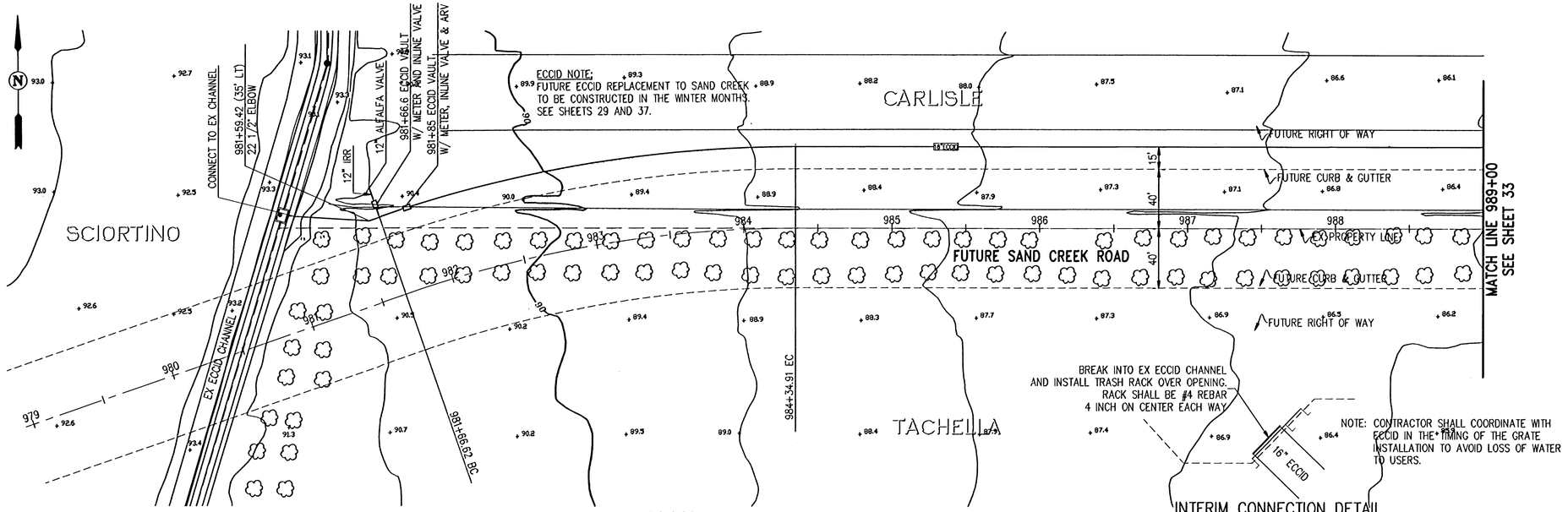

PLAN

SCALE: 1" = 40'

INTERIM CONNECTION DETAIL TO EXISTING ECCID CHANNEL

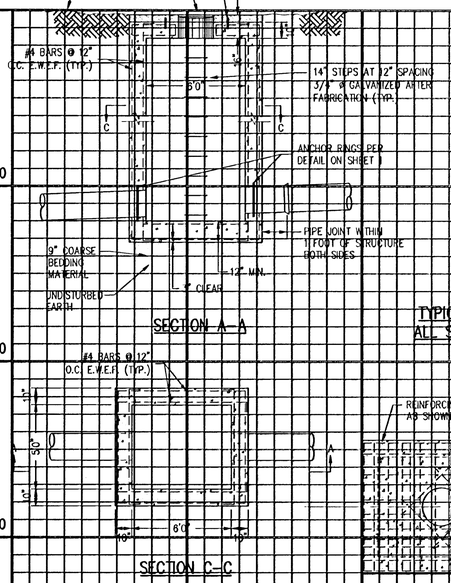

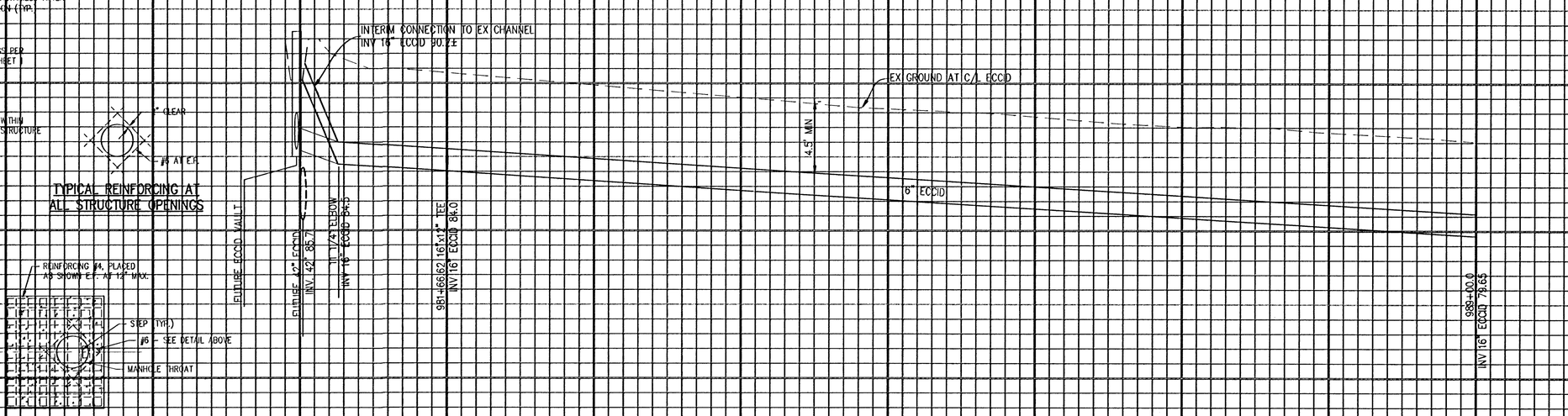

PROFILE

SCALE: HORIZONTAL 1" = 40'
VERTICAL 1" = 4'

978+00 979+00 980+00 981+00 982+00 983+00 984+00 985+00 986+00 987+00 988+00 989+00

THESE ARE THE FINAL CONSTRUCTION PLANS FOR THE PROJECT WITH THE ADDITIONS NOTED FOR FIELD CHANGES BROUGHT TO THE ATTENTION OF THE ENGINEER BY THE DEVELOPER, CONTRACTOR AND THE CITY ENGINEER.

REGISTERED PROFESSIONAL ENGINEER KENNETH R. TAPPIN 52845 EXP.12/31/02 CIVIL STATE OF CALIFORNIA

KENNETH R. TAPPIN RCE 52845
EXP. 12/31/02

8-30-2000
DATE

BRENTWOOD
ENGINEERING DEPARTMENT
708 THIRD STREET, BRENTWOOD, CA 94513

cbg Carlson, Barbee & Gibson, Inc.
CIVIL ENGINEERS • SURVEYORS • PLANNERS
2603 CAMINO RAMON, SUITE 100
SAN RAMON, CALIFORNIA 94583
TEL (925) 866-0322
FAX (925) 866-8575

IMPROVEMENT PLAN

AD 98-2/CIFP 98-1

PLAN AND PROFILE IRRIGATION LINE

BRENTWOOD CALIFORNIA

NO.	REVISIONS	BY	APP	DATE

DESIGNED UNDER THE DIRECTION OF:
KENNETH R. TAPPIN 7-17-98
(R.C.E. No. 52845 REGISTRATION EXPIRES 12-31-02) DATE

DESIGN: TER	DATE: 4-13-99
DRAWN: JOB	DATE: 4-13-99
CHECKED: KRT	DATE: 4-13-99

REGISTERED PROFESSIONAL ENGINEER KENNETH R. TAPPIN 52845 EXP.12/31/02 CIVIL STATE OF CALIFORNIA

SHEET 32 OF 50 SHEETS

6/21/00 AS BUILT F:\94453\ACAD\PHASE30\P\P32
JOB NO. 94453-30

CIP 98-0720

CIP 98-0720
Improvement Plan
Special Planning Area 'L'- Plan and Profile- Irrigation Line 1

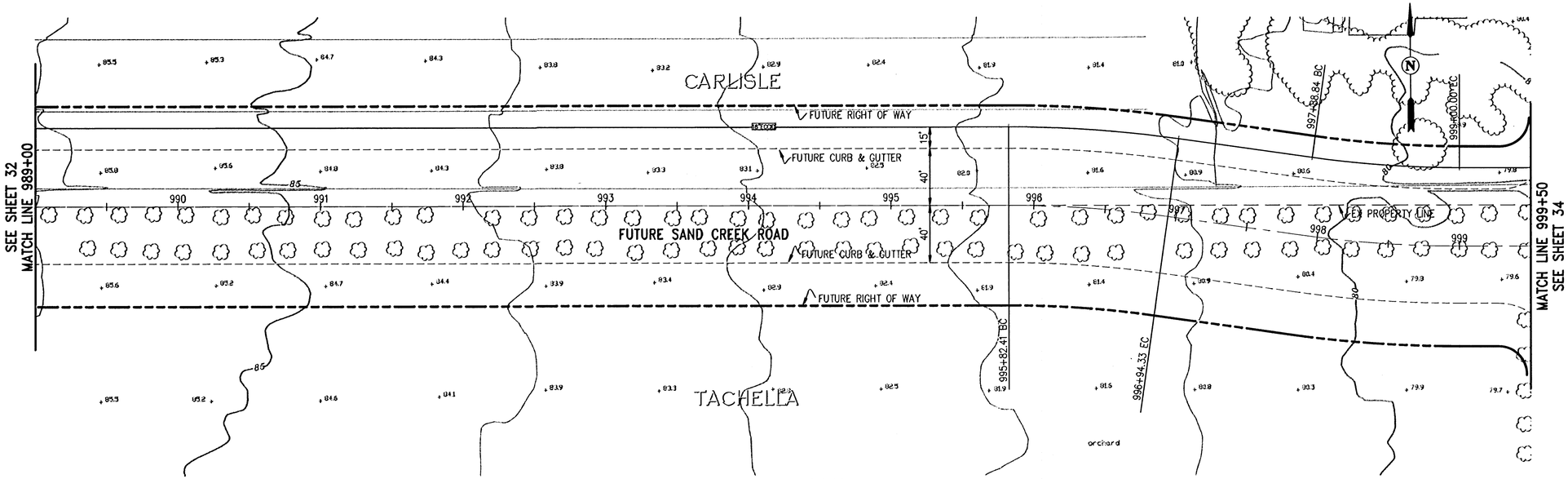

PLAN

SCALE: 1" = 40'

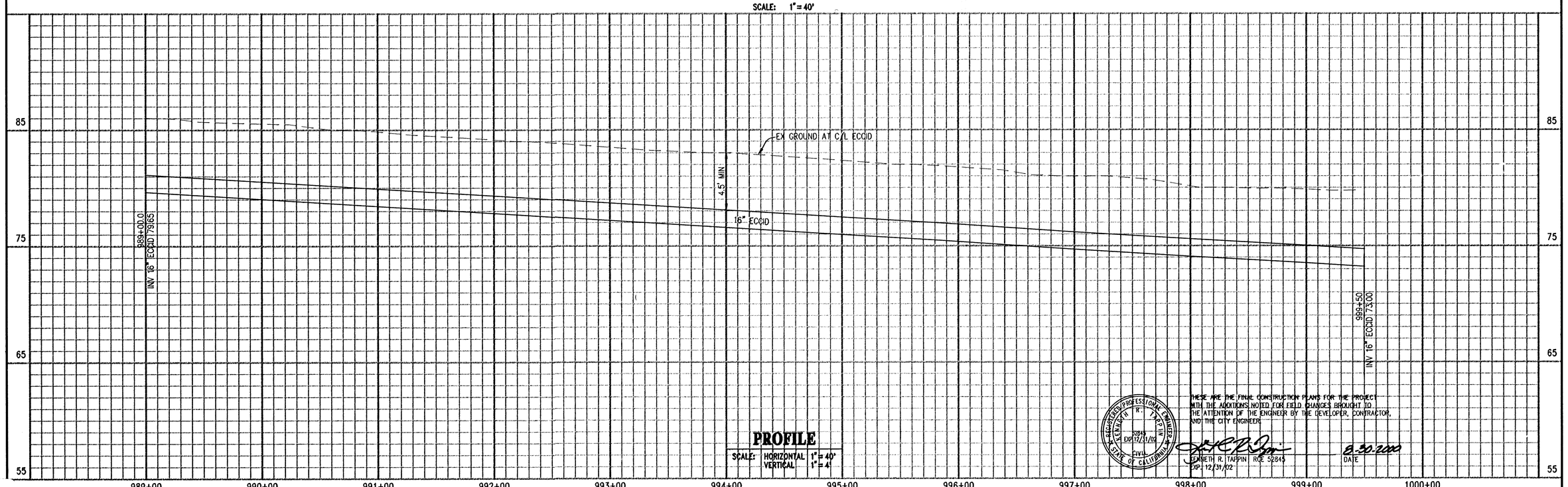

PROFILE

SCALE: HORIZONTAL 1" = 40'
VERTICAL 1" = 4'

THESE ARE THE FINAL CONSTRUCTION PLANS FOR THE PROJECT WITH THE ADDITIONS NOTED FOR FIELD CHANGES BROUGHT TO THE ATTENTION OF THE ENGINEER BY THE DEVELOPER, CONTRACTOR, AND THE CITY ENGINEER.

KENNETH R. TAPPIN RCE 52845
EXP: 12/31/02

8.30.2000
DATE

CIP 98-0720
Improvements Plan
Special Planning Area 1 - Plan and Profile- Irrigation Line 2

BRENTWOOD
ENGINEERING DEPARTMENT
708 THIRD STREET, BRENTWOOD, CA 94513

cbg Carlson, Barbee & Gibson, inc.
CIVIL ENGINEERS • SURVEYORS • PLANNERS
2000 CROW CANYON PLACE, SUITE 250
SAN RAMON, CALIFORNIA 94583
TEL (925) 866-0322
FAX (925) 866-8575

IMPROVEMENT PLAN — **AD 98-2/CIFP 98-1**

PLAN AND PROFILE IRRIGATION LINE

BRENTWOOD — **CALIFORNIA**

NO.	REVISIONS	BY	APP	DATE

DESIGNED UNDER THE DIRECTION OF:
KENNETH R. TAPPIN — DATE 7-17-98
PROJECT No. 52845 REGISTRATION EXPIRES 12-31-98

DESIGN: TER	DATE: 5-8-98
DRAWN: JOB	DATE: 5-8-98
CHECKED: KRT	DATE: 5-8-98

REGISTERED PROFESSIONAL ENGINEER — KENNETH R. TAPPIN — 52845 EXP.12/31/98 — CIVIL — STATE OF CALIFORNIA

SHEET **33** OF **50** SHEETS

6/21/00 AS BUILT

F:\94453\ACAD\PHASE30\PVP33
JOB NO 94453-30

CIP 98-0720

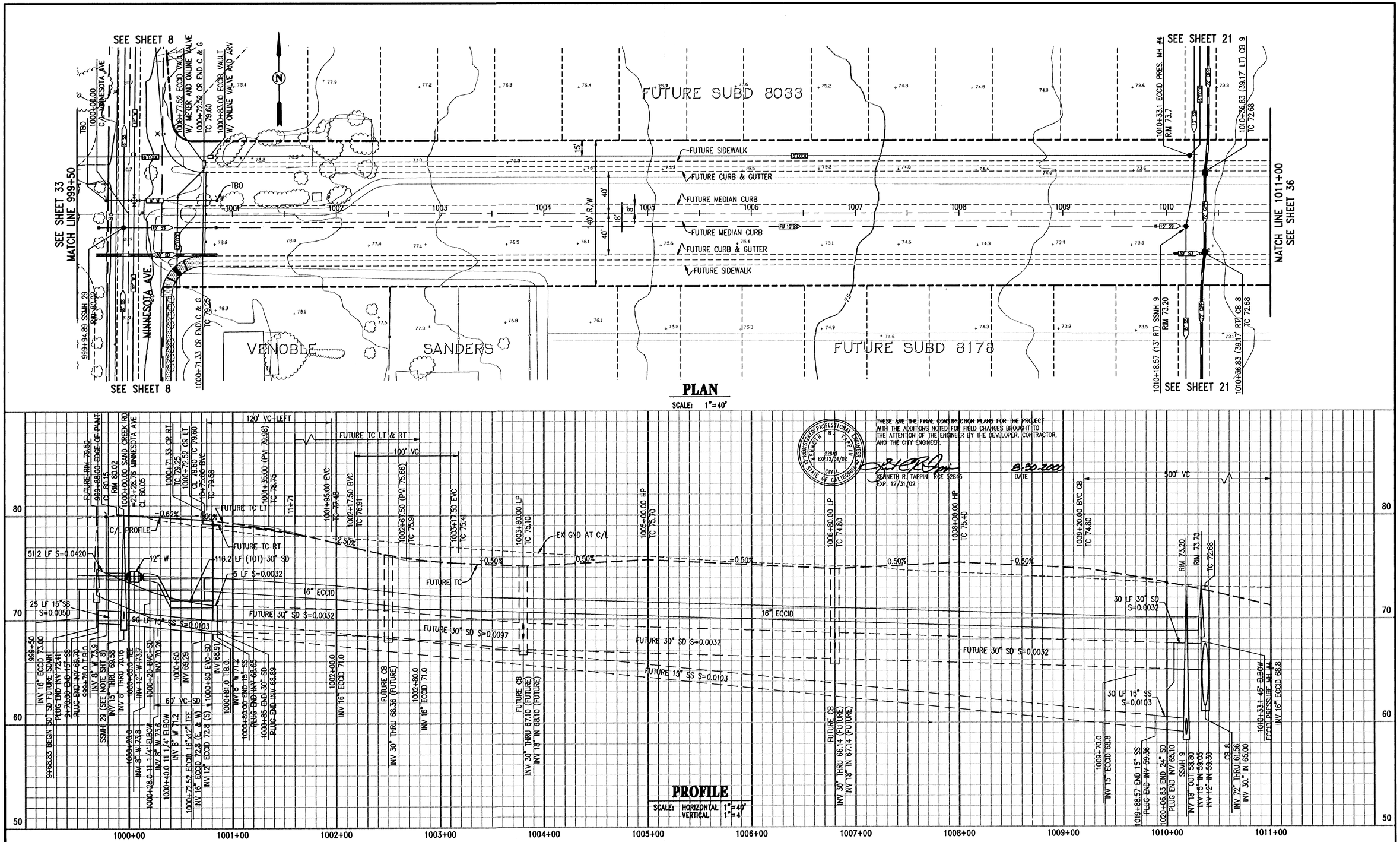

THESE ARE THE FINAL CONSTRUCTION PLANS FOR THE PROJECT WITH THE ADDITIONS NOTED FOR FIELD CHANGES BROUGHT TO THE ATTENTION OF THE ENGINEER BY THE DEVELOPER, CONTRACTOR, AND THE CITY ENGINEER.

KENNETH R. TAPPIN RCE 52845 EXP. 12/31/02 — 8-30-2000 DATE

REGISTERED PROFESSIONAL ENGINEER KENNETH R. TAPPIN 52845 EXP. 12/31/02 CIVIL STATE OF CALIFORNIA

BRENTWOOD
ENGINEERING DEPARTMENT
708 THIRD STREET, BRENTWOOD, CA 94513

cbg Carlson, Barbee & Gibson, Inc.
CIVIL ENGINEERS • SURVEYORS • PLANNERS
2000 CROW CANYON PLACE, SUITE 250
SAN RAMON, CALIFORNIA 94583
TEL (925) 866-0322
FAX (925) 866-8575

IMPROVEMENT PLAN — AD 98-2/CIFP 98-1

PLAN AND PROFILE
FUTURE SAND CREEK ROAD

BRENTWOOD — CALIFORNIA

NO.	REVISIONS	BY	APP	DATE

DESIGNED UNDER THE DIRECTION OF:
KENNETH R. TAPPIN — 7-17-98 DATE
R.C.E. No. 52845 REGISTRATION EXPIRES 12-31-98

DESIGN: TER	DATE: 5-8-98
DRAWN: JOB	DATE: 5-8-98
CHECKED: KRT	DATE: 5-8-98

REGISTERED PROFESSIONAL ENGINEER KENNETH R. TAPPIN 52845 EXP. 12/31/98 CIVIL STATE OF CALIFORNIA

SHEET 34 OF 50 SHEETS

6/21/00 AS BUILT

F:\94453\ACAD\PHASE30\IP\IP34
JOB NO. 94453-30

CIP 98-0720

CIP 98-0720
Improvement Plan
Special Planning Area "L" Plan and Profile- Irrigation Line 3

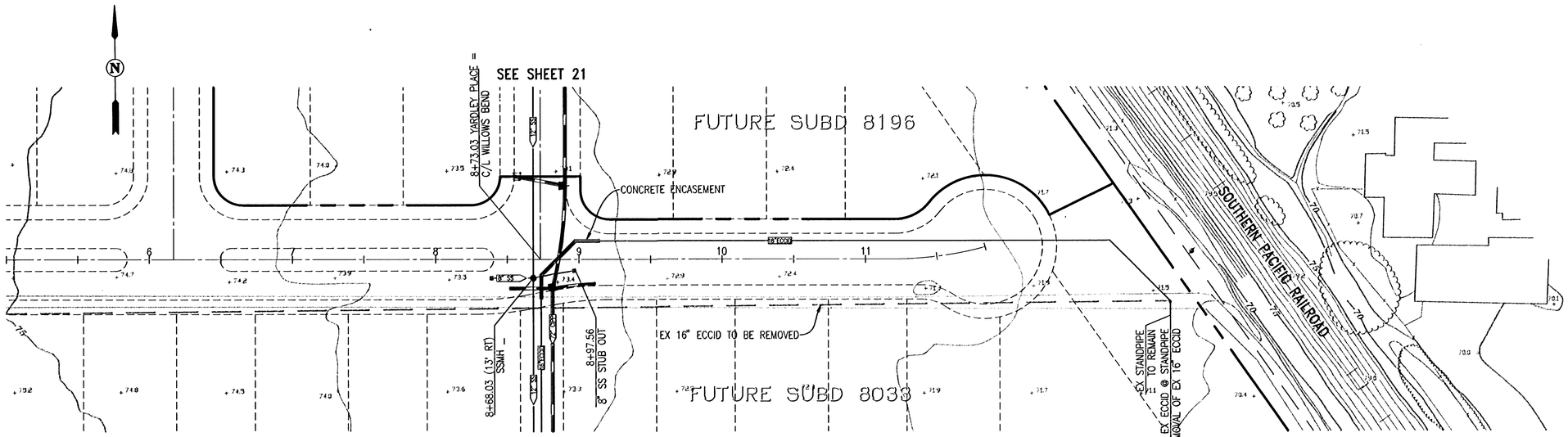

PLAN

SCALE: 1" = 40'

NOTE:

CONTRACTOR TO PROTECT ECCID LINE DURING CONSTRUCTION.

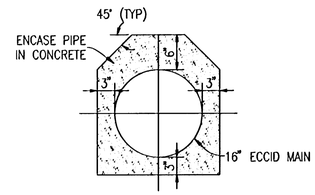

CONCRETE ENCASEMENT DETAIL

NOT TO SCALE

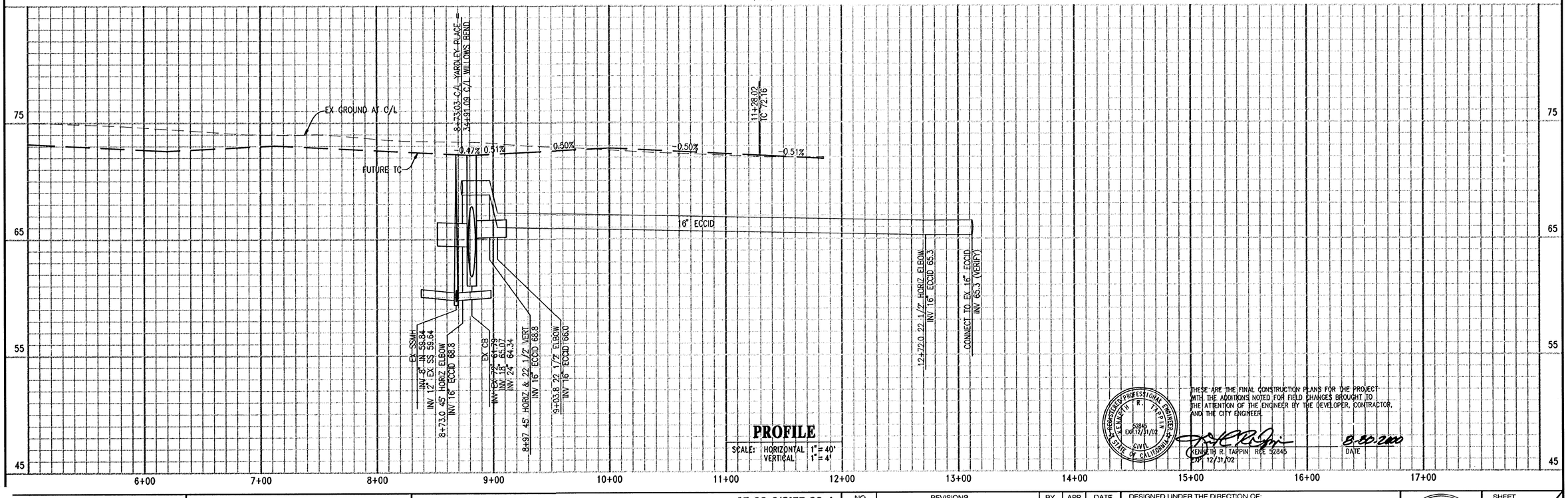

PROFILE

SCALE: HORIZONTAL 1" = 40'
VERTICAL 1" = 4'

REGISTERED PROFESSIONAL ENGINEER — KENNETH R. TAPPIN — 52845 EXP.12/31/02 — CIVIL — STATE OF CALIFORNIA

THESE ARE THE FINAL CONSTRUCTION PLANS FOR THE PROJECT WITH THE ADDITIONS NOTED FOR FIELD CHANGES BROUGHT TO THE ATTENTION OF THE ENGINEER BY THE DEVELOPER, CONTRACTOR, AND THE CITY ENGINEER.

KENNETH R. TAPPIN RCE 52845 EXP. 12/31/02 — DATE 8-30-2000

CIP 98-0720
Improvement Plan
Special Planning Area 1 - Plan and Profile - 15" ECCID Pipeline

BRENTWOOD
ENGINEERING DEPARTMENT
708 THIRD STREET, BRENTWOOD, CA 94513

cbg Carlson, Barbee & Gibson, Inc.
CIVIL ENGINEERS • SURVEYORS • PLANNERS
2000 CROW CANYON PLACE, SUITE 250
SAN RAMON, CALIFORNIA 94583
TEL (925) 866-0322
FAX (925) 866-8575

IMPROVEMENT PLAN

AD 98-2/CIFP 98-1

PLAN AND PROFILE
15" ECCID PIPELINE

BRENTWOOD CALIFORNIA

NO.	REVISIONS	BY	APP	DATE

DESIGNED UNDER THE DIRECTION OF:
KENNETH R. TAPPIN — DATE 7-17-98
LS/P.E. No. 52845 REGISTRATION EXPIRES 12-31-98

DESIGN: TER DATE: 5-8-98
DRAWN: JOB DATE: 5-8-98
CHECKED: KRT DATE: 5-8-98

REGISTERED PROFESSIONAL ENGINEER — KENNETH R. TAPPIN — 52845 EXP.12/31/98 — CIVIL — STATE OF CALIFORNIA

SHEET 35 OF 50 SHEETS

6/21/00 AS BUILT F:\94453\ACAD\PHASE3\01\P35
JOB NO. 94453.30

CIP 98-0720

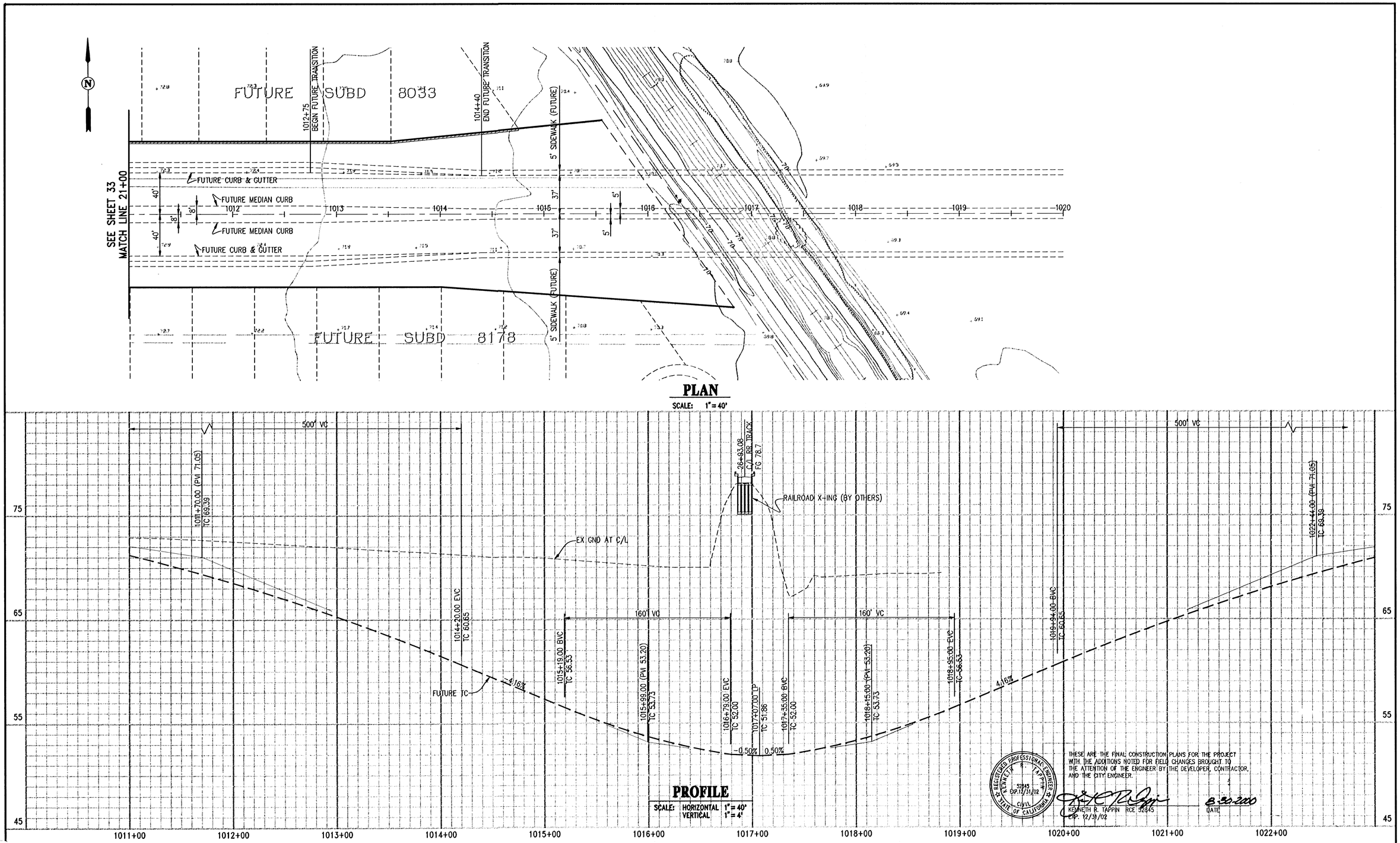

THESE ARE THE FINAL CONSTRUCTION PLANS FOR THE PROJECT WITH THE ADDITIONS NOTED FOR FIELD CHANGES BROUGHT TO THE ATTENTION OF THE ENGINEER BY THE DEVELOPER, CONTRACTOR, AND THE CITY ENGINEER.

KENNETH R. TAPPIN RCE 52845 EXP. 12/31/02 — DATE 8-30-2000

REGISTERED PROFESSIONAL ENGINEER KENNETH R. TAPPIN 52845 EXP. 12/31/02 CIVIL STATE OF CALIFORNIA

BRENTWOOD
ENGINEERING DEPARTMENT
708 THIRD STREET, BRENTWOOD, CA 94513

cbg Carlson, Barbee & Gibson, Inc.
CIVIL ENGINEERS • SURVEYORS • PLANNERS
2000 CROW CANYON PLACE, SUITE 250
SAN RAMON, CALIFORNIA 94583
TEL (925) 866-0322
FAX (925) 866-8575

IMPROVEMENT PLAN — AD 98-2/CIFP 98-1

PLAN AND PROFILE
FUTURE GRADES FOR BRIDGE

BRENTWOOD — CALIFORNIA

NO.	REVISIONS	BY	APP	DATE

DESIGNED UNDER THE DIRECTION OF:
KENNETH R. TAPPIN — DATE 9-3-98
R.C.E. No. 52845 REGISTRATION EXPIRES 12-31-98

DESIGN: TER	DATE: 5-8-98
DRAWN: JOB	DATE: 5-8-98
CHECKED: KRT	DATE: 5-8-98

REGISTERED PROFESSIONAL ENGINEER KENNETH R. TAPPIN 52845 EXP. 12/31/98 CIVIL STATE OF CALIFORNIA

SHEET 36 OF 50 SHEETS

6/21/00 AS BUILT F:\94453\ACAD\PHASE30\IP\IP36
JOB NO. 94453-30

CIP 98-0720

CIP 98-0720
Improvement Plan
Special Planning Area 'L' Plan and Profile- Future Grades for Bridge

NOTES:

1. PHASE II ECCID FACILITIES TO BE CONSTRUCTED DURING THE WINTER.
2. STATIONING IS ALONG CENTERLINE OF ECCID PIPELINE.
3. INSTALL SERVICE TO TACHELLA PROPERTY AT TIME OF CONSTRUCTION OF 42" ECCID.

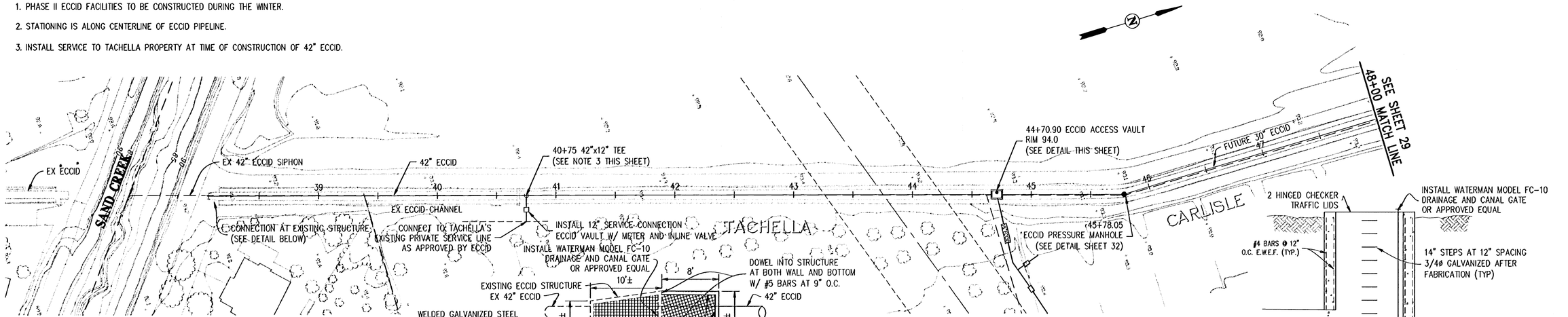

CONNECTION AT EX STRUCTURE NORTH OF SAND CREEK DETAIL
PLAN VIEW
NOT TO SCALE

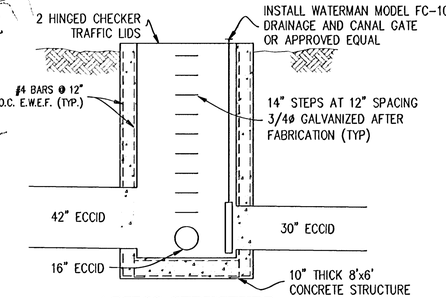

ACCESS STRUCTURE
NOT TO SCALE

PLAN
SCALE: 1" = 40'

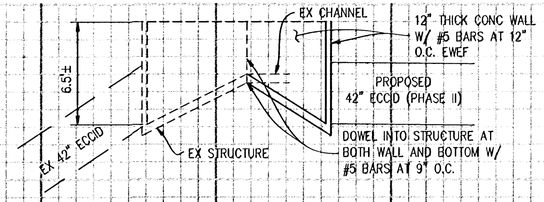

CONNECTION AT EX STRUCTURE NORTH OF SAND CREEK DETAIL
PROFILE VIEW
NOT TO SCALE

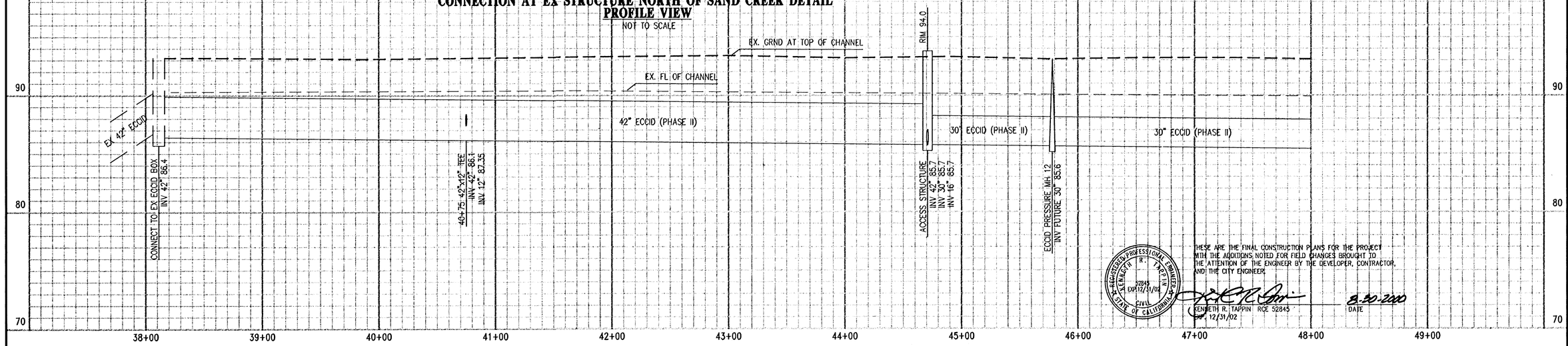

THESE ARE THE FINAL CONSTRUCTION PLANS FOR THE PROJECT WITH THE ADDITIONS NOTED FOR FIELD CHANGES BROUGHT TO THE ATTENTION OF THE ENGINEER BY THE DEVELOPER, CONTRACTOR, AND THE CITY ENGINEER.

REGISTERED PROFESSIONAL ENGINEER KENNETH R. TAPPIN 52845 EXP.12/31/02 CIVIL STATE OF CALIFORNIA

KENNETH R. TAPPIN RCE 52845 Exp. 12/31/02 — 8-30-2000 DATE

CIP 98-0720
Improvement Plan
Special Plan Sheet - Plan and Profile - Irrigation Line 1

BRENTWOOD CITY OF
ENGINEERING DEPARTMENT
708 THIRD STREET, BRENTWOOD, CA 94513

cbg **Carlson, Barbee & Gibson, Inc.**
CIVIL ENGINEERS • SURVEYORS • PLANNERS
2000 CROW CANYON PLACE, SUITE 250
SAN RAMON, CALIFORNIA 94583
TEL (925) 866-0322
FAX (925) 866-8575

IMPROVEMENT PLAN — **AD 98-2/CIFP 98-1**

PLAN AND PROFILE IRRIGATION LINE

BRENTWOOD — **CALIFORNIA**

NO.	REVISIONS	BY	APP	DATE

DESIGNED UNDER THE DIRECTION OF:
KENNETH R. TAPPIN — 9-3-98 DATE
R.C.E. No. 52845 REGISTRATION EXPIRES 12-31-98

DESIGN: TER	DATE: 5-8-98
DRAWN: JOB	DATE: 5-8-98
CHECKED: KRT	DATE: 5-8-98

REGISTERED PROFESSIONAL ENGINEER KENNETH R. TAPPIN 52845 EXP.12/31/98 CIVIL STATE OF CALIFORNIA

SHEET **37** OF **50** SHEETS

6/21/00 AS BUILT F:\94453\ACAD\PHASE30\P\P37
JOB NO. 94453-30

CIP 98-0720

NOTES:

1. THE TIMING OF THE CONSTRUCTION OF PHASE II 30" ECCID PIPELINE AND ABANDONMENT OF EXISTING ECCID FACILITIES SHALL BE COORDINATED WITH ECCID.
2. STATIONING IS ALONG CENTERLINE OF FUTURE ECCID.
3. ABANDON TEMPORARY ECCID CONNECTION FOR PHASE II CONSTRUCTION.
4. REMOVE TEMPORARY MANHOLE FOR PHASE II CONSTRUCTION.
5. ECCID LINE NOT TO BE BUILT UNTIL PARK DESIGN IS APPROVED BY THE CITY OF BRENTWOOD PLANNING COMMISION. LAYOUT OF ECCID SUBJECT TO CHANGE BASED ON FINAL APPROVAL OF PARK.

FUTURE SUBD 8177

FUTURE SUBDIVISION

PARK

TEMPORARY CONNECTION TO EX ECCID (SEE NOTE 3 THIS SHEET)

EX STANDPIPES TO BE REMOVED AT TIME OF ABANDONMENT

EX ECCID TO BE ABANDONED UPON COMPLETION OF FUTURE ECCID

SEE NOTE 4 THIS SHEET

85+51.31 ECCID PRESSURE MH 7

30" ECCID (PHASE II) SEE NOTE 5 THIS SHEET

72+84.41 ECCID PRESSURE MH 9

EX ECCID TO BE REMOVED

EX STANDPIPES TO BE REMOVED AT TIME OF ABANDONMENT

12" ALFALFA VALVE

ECCID VAULT WITH METER AND INLINE VALVE

SEE SHEET 39 73+00 MATCH LINE

SEE SHEET 26

PLAN
SCALE: 1" = 40'

EX GRND AT C/L ECCID

RIM 90.5

ECCID PRES. MH #7
INV 30" ECCID 83.3

TIE INTO EX MH FOR PHASE II CONSTRUCTION

30" ECCID

30" ECCID (PHASE II)

RIM 96.5

ECCID PRESSURE MH 9
INV 30" ECCID 83.3

95 / 85 / 75 / 65

62+00 63+00 64+00 65+00 66+00 67+00 68+00 69+00 70+00 71+00 72+00 73+00

THESE ARE THE FINAL CONSTRUCTION PLANS FOR THE PROJECT WITH THE ADDITIONS NOTED FOR FIELD CHANGES BROUGHT TO THE ATTENTION OF THE ENGINEER BY THE DEVELOPER, CONTRACTOR, AND THE CITY ENGINEER.

KENNETH R. TAPPIN RCE 52845
EXP. 12/31/02

8-20-2000
DATE

REGISTERED PROFESSIONAL ENGINEER — KENNETH R. TAPPIN — 52845 EXP.12/31/02 — CIVIL — STATE OF CALIFORNIA

CIP 98-0720
Improvements Plan
Special Planning Area 1- Plan and Profile- Irrigation Line 2

BRENTWOOD
ENGINEERING DEPARTMENT
708 THIRD STREET, BRENTWOOD, CA 94513

cbg Carlson, Barbee & Gibson, Inc.
CIVIL ENGINEERS • SURVEYORS • PLANNERS
2603 CAMINO RAMON, SUITE 100
SAN RAMON, CALIFORNIA 94583
TEL (925) 866-0322
FAX (925) 866-8575

IMPROVEMENT PLAN

PLAN AND PROFILE IRRIGATION LINE

BRENTWOOD CALIFORNIA

AD 98-2/CIFP 98-1

NO.	REVISIONS	BY	APP	DATE

DESIGNED UNDER THE DIRECTION OF:
KENNETH R. TAPPIN — DATE 9-3-98
R.C.E. No. 52845 REGISTRATION EXPIRES 12-31-02

DESIGN: TER	DATE: 4-13-99
DRAWN: JOB	DATE: 4-13-99
CHECKED: KRT	DATE: 4-13-99

REGISTERED PROFESSIONAL ENGINEER — KENNETH R. TAPPIN — 52845 EXP.12/31/02 — CIVIL — STATE OF CALIFORNIA

SHEET 38 OF 50 SHEETS

6/21/00 AS BUILT F:\94453\ACAD\PHASE30\P\P38
JOB NO. 94453-30

CIP 98-0720

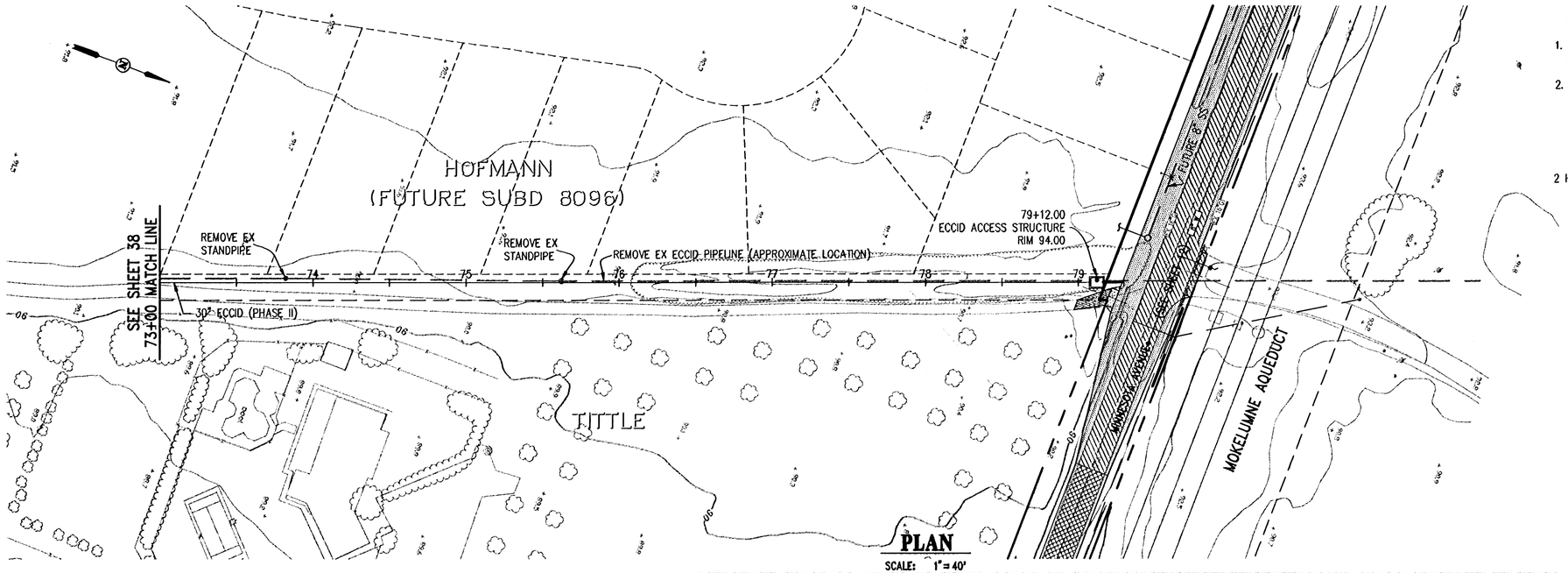

PLAN
SCALE: 1" = 40'

NOTES:

1. THE TIMING OF THE CONSTRUCTION OF PHASE II 30" ECCID PIPELINE AND REMOVAL OF EXISTING ECCID FACILITIES SHALL BE COORDINATED WITH ECCID.
2. STATIONING IS ALONG CENTERLINE OF ECCID.

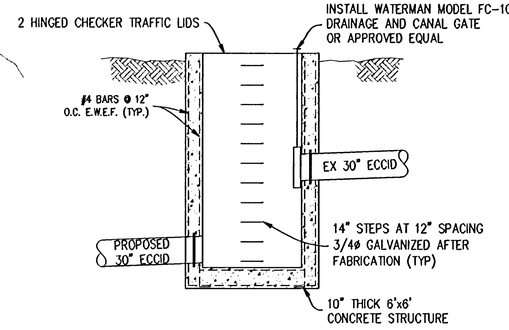

ACCESS STRUCTURE
NOT TO SCALE

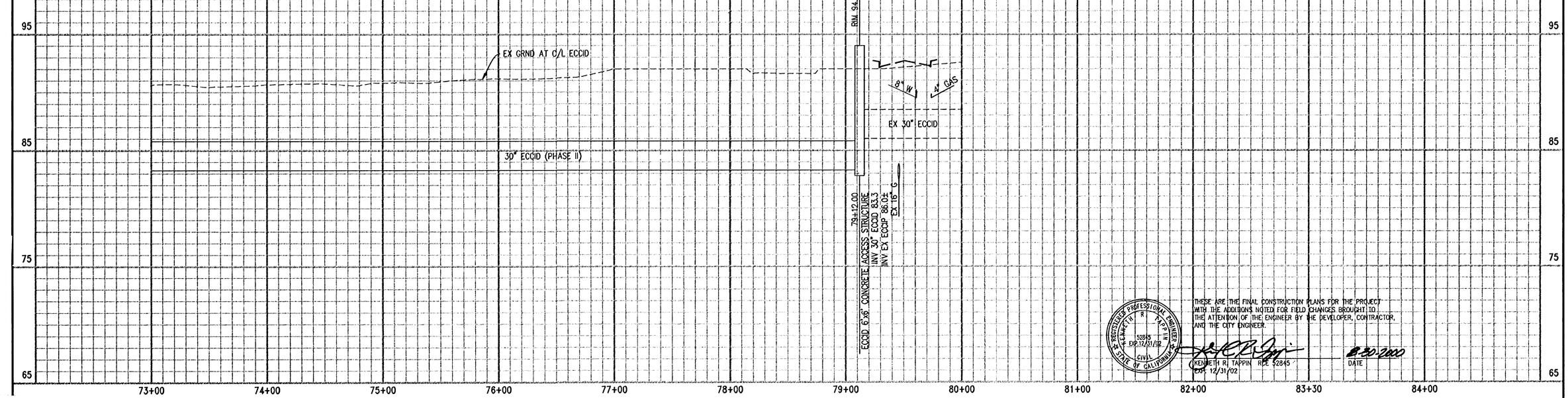

THESE ARE THE FINAL CONSTRUCTION PLANS FOR THE PROJECT WITH THE ADDITIONS NOTED FOR FIELD CHANGES BROUGHT TO THE ATTENTION OF THE ENGINEER BY THE DEVELOPER, CONTRACTOR, AND THE CITY ENGINEER.

REGISTERED PROFESSIONAL ENGINEER KENNETH R. TAPPIN 52845 EXP.12/31/02 CIVIL STATE OF CALIFORNIA

KENNETH R. TAPPIN RCE 52845 EXP. 12/31/02 — DATE 6-30-2000

CIP 98-0720
Improvement Plan
Special Planning Area "L" Plan and Profile Irrigation Line 8

BRENTWOOD
ENGINEERING DEPARTMENT
708 THIRD STREET, BRENTWOOD, CA 94513

Carlson, Barbee & Gibson, Inc.
CIVIL ENGINEERS • SURVEYORS • PLANNERS
2000 CROW CANYON PLACE, SUITE 250
SAN RAMON, CALIFORNIA 94583
TEL (925) 866-0322
FAX (925) 866-8575

IMPROVEMENT PLAN — **AD 98-2/CIFP 98-1**

PLAN AND PROFILE IRRIGATION LINE

BRENTWOOD — **CALIFORNIA**

NO.	REVISIONS	BY	APP	DATE

DESIGNED UNDER THE DIRECTION OF:
KENNETH R. TAPPIN — 9-3-98 DATE
R.C.E. No. 52845 REGISTRATION EXPIRES 12-31-98

DESIGN: TER	DATE: 5-8-98
DRAWN: JOB	DATE: 5-8-98
CHECKED: KRT	DATE: 5-8-98

REGISTERED PROFESSIONAL ENGINEER KENNETH R. TAPPIN 52845 EXP.12/31/98 CIVIL STATE OF CALIFORNIA

SHEET **39** OF 50 SHEETS

6/21/00 AS BUILT
F:\94453\ACAD\PHASE3OU\PUP39
JOB NO. 94453-30
CIP 98-0720

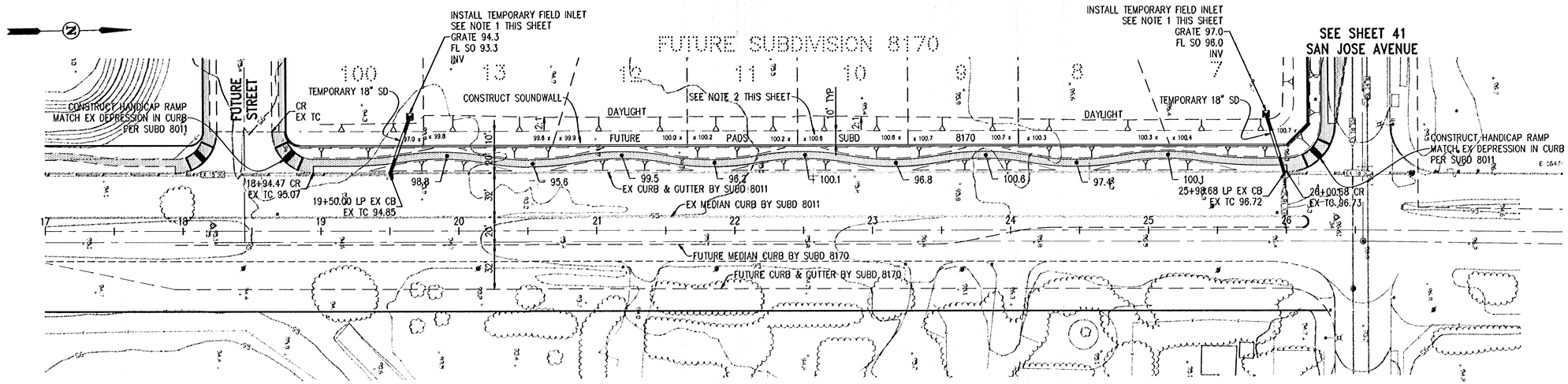

FAIRVIEW AVENUE

SCALE: 1" = 40'

NOTES:

1. FIELD INLET NOT REQUIRED IF GRADING FOR SUBD 8170 IS DONE AT THE SAME TIME.
2. GRADE 10' OF FUTURE PADS TO ELEVATIONS SHOWN.

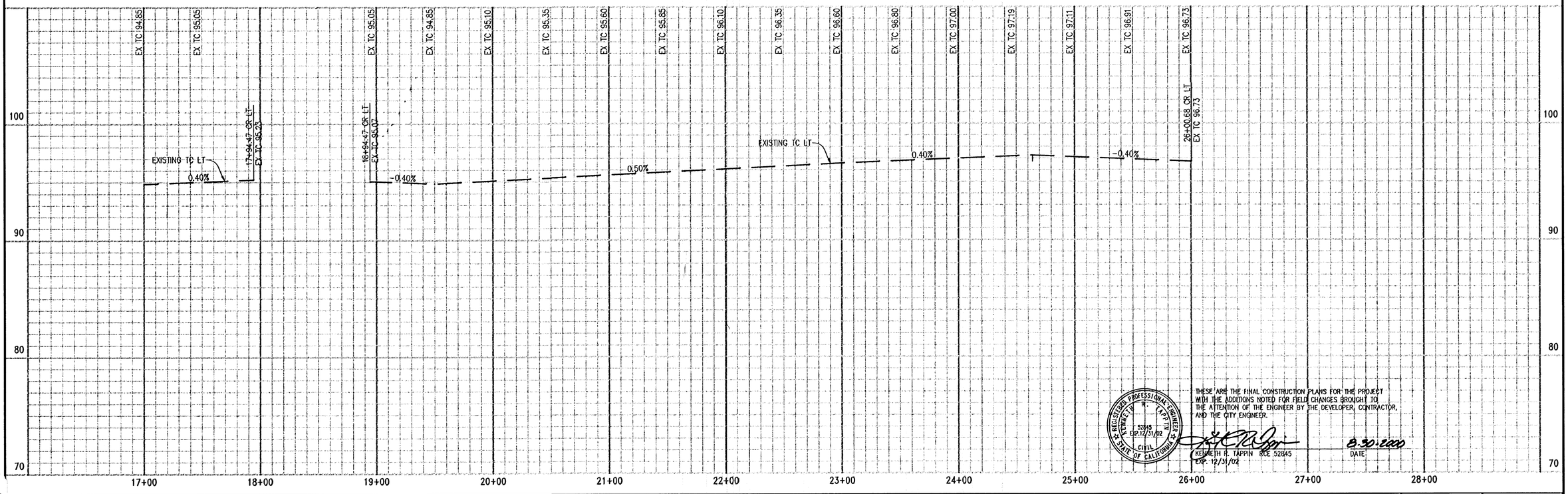

THESE ARE THE FINAL CONSTRUCTION PLANS FOR THE PROJECT WITH THE ADDITIONS NOTED FOR FIELD CHANGES BROUGHT TO THE ATTENTION OF THE ENGINEER BY THE DEVELOPER, CONTRACTOR, AND THE CITY ENGINEER.

KENNETH R. TAPPIN RCE 52845
EXP. 12/31/02

8.30.2000
DATE

REGISTERED PROFESSIONAL ENGINEER
KENNETH R. TAPPIN
52845 EXP. 12/31/02
CIVIL
STATE OF CALIFORNIA

CIP 98-0720
Improvement Plan
Special Planning Area 1- Plan and Profile- Fairview Avenue Sidewalk

BRENTWOOD
ENGINEERING DEPARTMENT
708 THIRD STREET, BRENTWOOD, CA 94513

cbg Carlson, Barbee & Gibson, Inc.
CIVIL ENGINEERS • SURVEYORS • PLANNERS
2000 CROW CANYON PLACE, SUITE 250
SAN RAMON, CALIFORNIA 94583
TEL (925) 866-0322
FAX (925) 866-8575

IMPROVEMENT PLAN

AD 98-2/CIFP 98-1

PLAN AND PROFILE
FAIRVIEW AVENUE SIDEWALK

BRENTWOOD CALIFORNIA

NO.	REVISIONS	BY	APP	DATE

DESIGNED UNDER THE DIRECTION OF:
KENNETH R. TAPPIN
R.C.E. No. 52845 REGISTRATION EXPIRES 12-31-98
8-3-98
DATE

DESIGN: TER DATE: 5-8-98
DRAWN: JOB DATE: 5-8-98
CHECKED: KRT DATE: 5-8-98

REGISTERED PROFESSIONAL ENGINEER
KENNETH R. TAPPIN
52845 EXP. 12/31/98
CIVIL
STATE OF CALIFORNIA

SHEET 40 OF 50 SHEETS

6/21/00 AS BUILT

G:\800\ACAD\PPHASE3O\P40
JOB NO. 94453-30

CIP 98-0720

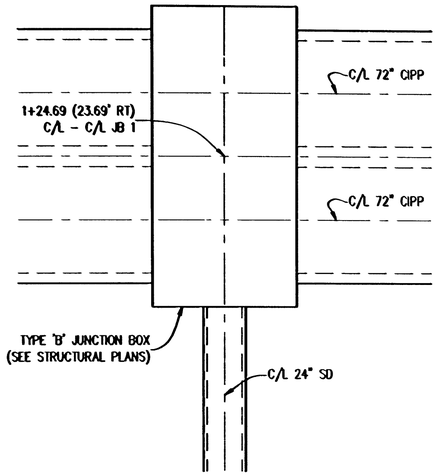

LAYOUT DETAIL JUNCTION BOX 1
NOT TO SCALE

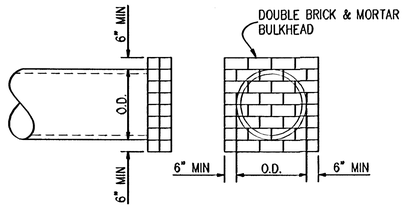

STORM DRAIN PLUG DETAIL
NOT TO SCALE

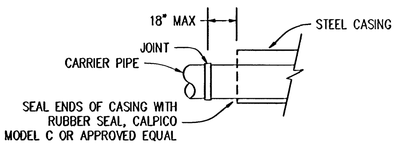

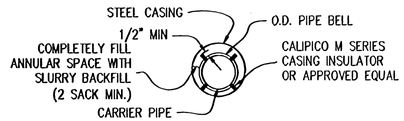

PIPE IN STEEL CASING DETAIL
NOT TO SCALE

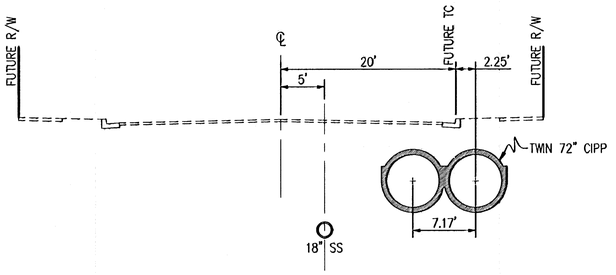

TYPICAL SD/SS LAYOUT STA 3+26 TO STA 13+83
NOT TO SCALE

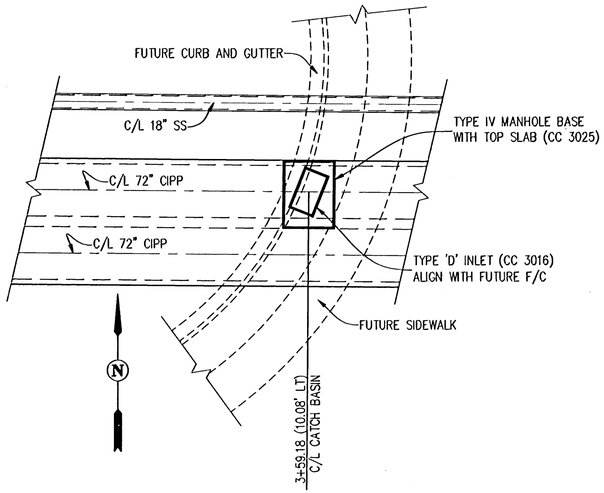

CATCH BASIN 1 LAYOUT DETAIL
NOT TO SCALE

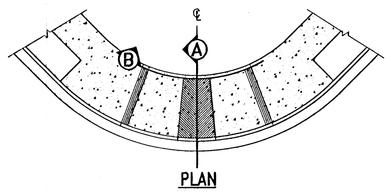

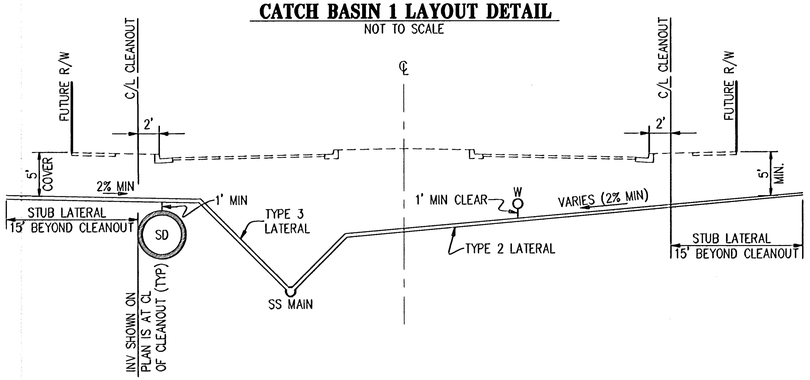

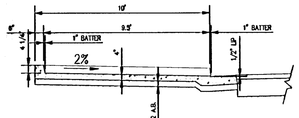

SECTION A-A

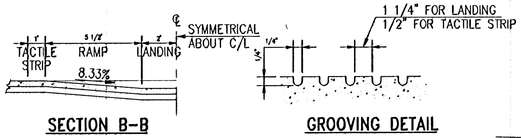

SECTION B-B

GROOVING DETAIL

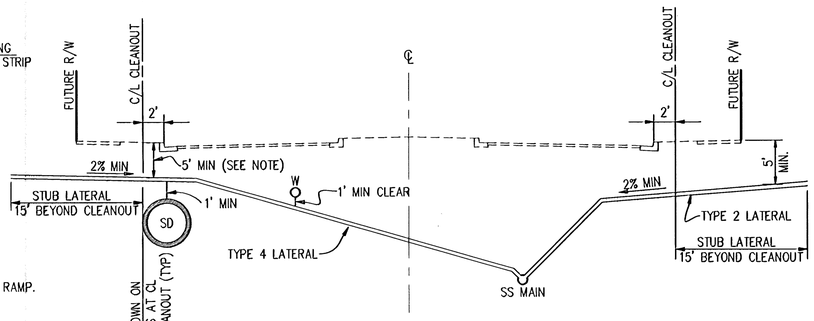

NOTE:
1. INVERT SHOWN ON PLANS IS AT CLEANOUT LOCATION (2' BEHIND F/C)
2. IN CASES WHERE LESS THAN 5' COVER, USE DIP WHERE NOTED ON PLANS.

SANITARY SEWER LATERAL DETAIL
NOT TO SCALE

NOTES:
1. HANDICAP RAMPS SHALL BE CONSTRUCTED AT MID-POINT OF CURB RETURNS.
2. ALL CONCRETE SHALL BE CLASS B, 2500 P.S.I. MINIMUM, WITH 1 1/2 LBS. FIBRILLATED POLYPROPYLENE FIBERS PER CUBIC YARD.
3. ALL CONCRETE SHALL HAVE A MINIMUM 4" CUSHION OF CLASS 2 A.B. AT 95% RELATIVE COMPACTION (D1557-78) ON COMPACTED SUB-GRADE.
4. RAMPS SHALL HAVE HEAVY BROOM FINISH TRANSVERSE TO THE SLOPE OF THE RAMP.
5. GROOVING ON LANDING SHALL POINT TOWARD HANDICAP RAMPS ON ADJACENT RETURNS. WHERE THERE IS ONLY ONE ADJACENT RETURN (SUCH AS AT A T-INTERSECTION) ALL GROOVING SHALL POINT TOWARDS THE ONE HANDICAP RAMP.
6. CONSTRUCT DEEP SCORE LINES AT LEADING EDGE OF TACTILE STRIPS AND AT CENTERLINE OF LANDING.
7. CROSSWALKS SHALL BE STRIPED CENTERED ON THE LANDING OF THE HANDICAP RAMP.

HANDICAP RAMP DETAIL (MODIFIED)
NOT TO SCALE

THESE ARE THE FINAL CONSTRUCTION PLANS FOR THE PROJECT WITH THE ADDITIONS NOTED FOR FIELD CHANGES BROUGHT TO THE ATTENTION OF THE ENGINEER BY THE DEVELOPER, CONTRACTOR, AND THE CITY ENGINEER.

REGISTERED PROFESSIONAL ENGINEER — KENNETH R. TAPPIN — 52845 — EXP. 12/31/02 — CIVIL — STATE OF CALIFORNIA

KENNETH R. TAPPIN RCE 52845
EXP. 12/31/02

8-30-2000
DATE

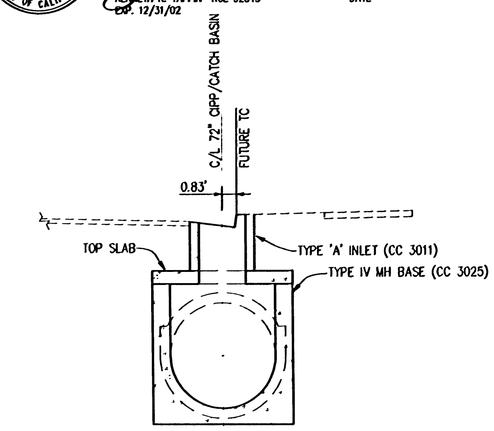

NOTE: SEE COUNTY STANDARD PLANS FOR DIMENSIONS AND DETAILS NOT SHOWN.

DETAIL TYPE 'A' INLET ON TYPE IV MH BASE
NOT TO SCALE

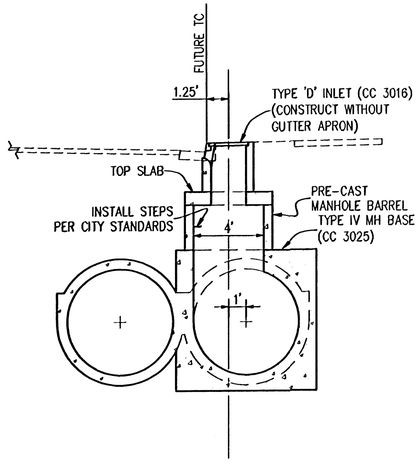

NOTE: SEE COUNTY STANDARD PLANS FOR DIMENSIONS AND DETAILS NOT SHOWN.

DETAIL TYPE 'D' INLET ON TYPE IV MH BASE
NOT TO SCALE

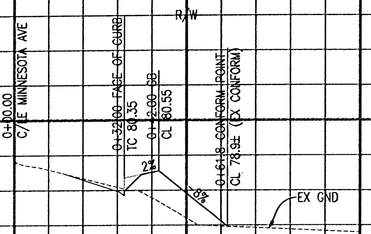

C/L D/W PROFILE (STA 5+09 MINNESOTA AVE)

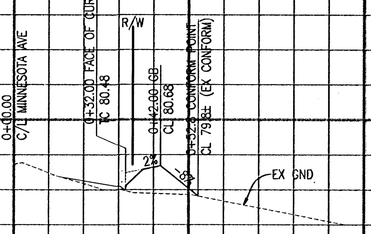

C/L D/W PROFILE (STA 6+79 MINNESOTA AVE)

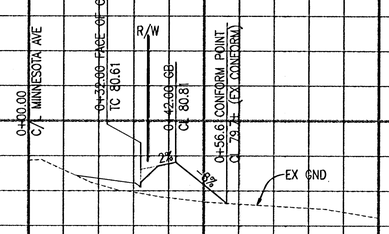

C/L D/W PROFILE (STA 7+06 MINNESOTA AVE)

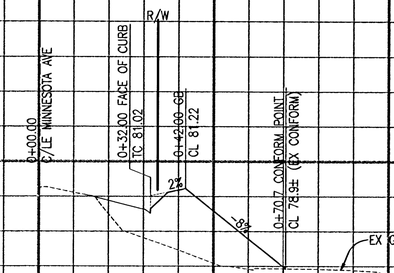

C/L D/W PROFILE (STA 8+02 MINNESOTA AVE)

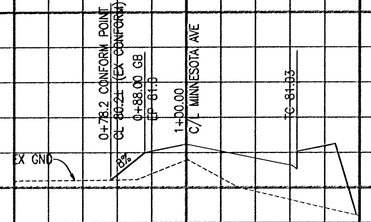

C/L D/W PROFILE (STA 19+59 MINNESOTA AVE)

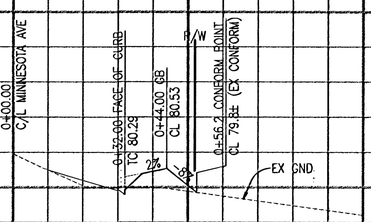

C/L D/W PROFILE (STA 21+05 MINNESOTA AVE)

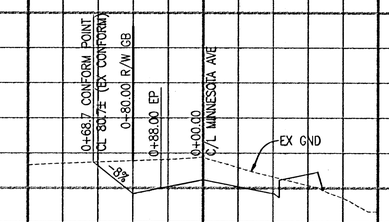

C/L D/W PROFILE (STA 25+20 MINNESOTA AVE)

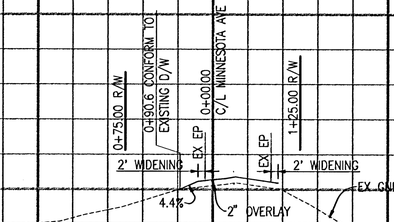

C/L D/W PROFILE (STA 52+06 MINNESOTA AVE)

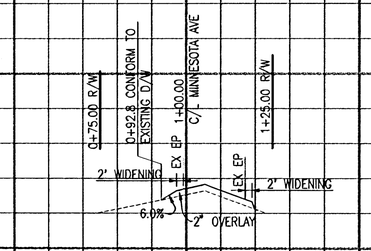

C/L D/W PROFILE (STA 55+10 MINNESOTA AVE)

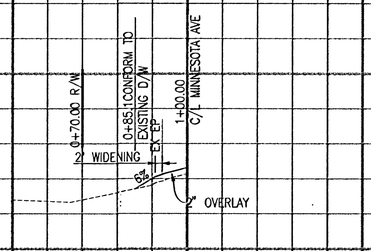

C/L D/W PROFILE (STA 63+11 MINNESOTA AVE)

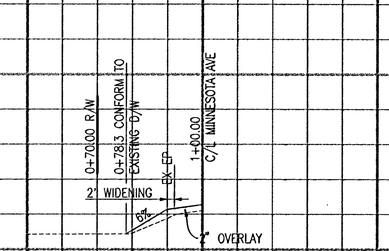

C/L D/W PROFILE (STA 64+62 MINNESOTA AVE)

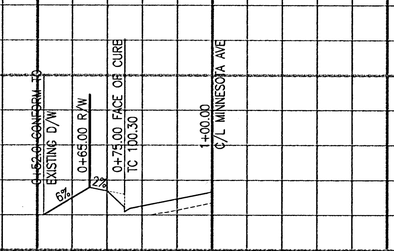

C/L D/W PROFILE (STA 67+19 MINNESOTA AVE)

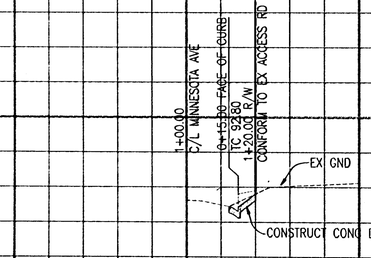

C/L D/W PROFILE (STA 67+53 MINNESOTA AVE)

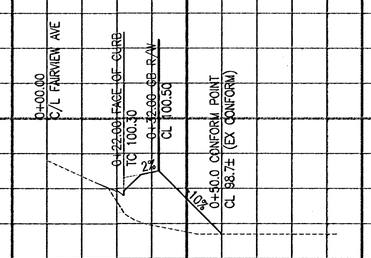

C/L D/W PROFILE (STA 63+24 FAIRVIEW AVE)

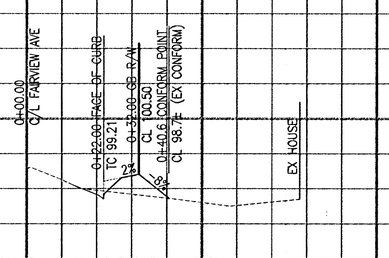

C/L D/W PROFILE (STA 74+16 FAIRVIEW AVE)

PROFILES

SCALE: HORIZONTAL 1" = 20'
VERTICAL 1" = 2'

NOTE:
SLOPES OF DRIVEWAYS ARE APPROXIMATE. CONTRACTOR AND OWNER SHALL WORK WITH THE PROPERTY OWNERS TO VARIFY SLOPES.

THESE ARE THE FINAL CONSTRUCTION PLANS FOR THE PROJECT WITH THE ADDITIONS NOTED FOR FIELD CHANGES BROUGHT TO THE ATTENTION OF THE ENGINEER BY THE DEVELOPER, CONTRACTOR, AND THE CITY ENGINEER.

REGISTERED PROFESSIONAL ENGINEER KENNETH R. TAPPIN 52845 EXP.12/31/02 CIVIL STATE OF CALIFORNIA

KENNETH R. TAPPIN RCE 52845
EXP. 12/31/02

8-30-2000
DATE

CIP 98-0720
Improvement Plans
Special Planning Area 1- Profiles-
Driveway Centerline

BRENTWOOD
ENGINEERING DEPARTMENT
708 THIRD STREET, BRENTWOOD, CA 94513

cbg Carlson, Barbee & Gibson, Inc.
CIVIL ENGINEERS • SURVEYORS • PLANNERS
2000 CROW CANYON PLACE, SUITE 250
SAN RAMON, CALIFORNIA 94583
TEL (925) 866-0322
FAX (925) 866-8575

IMPROVEMENT PLAN

AD 98-2/CIFP 98-1

PROFILES
DRIVEWAY CENTERLINE

BRENTWOOD CALIFORNIA

NO.	REVISIONS	BY	APP	DATE

DESIGNED UNDER THE DIRECTION OF:
KENNETH R. TAPPIN
R.C.E. No. 52845 REGISTRATION EXPIRES 12-31-98
8-3-98
DATE

DESIGN: TER	DATE: 5-8-98
DRAWN: JOB	DATE: 5-8-98
CHECKED: KRT	DATE: 5-8-98

REGISTERED PROFESSIONAL ENGINEER KENNETH R. TAPPIN 52845 EXP.12/31/98 CIVIL STATE OF CALIFORNIA

SHEET 44 OF 50 SHEETS

6/21/00 AS BUILT

F:\94453\ACAD\PHASE3\PLP44
JOB NO. 94453-30

CIP-98-0720

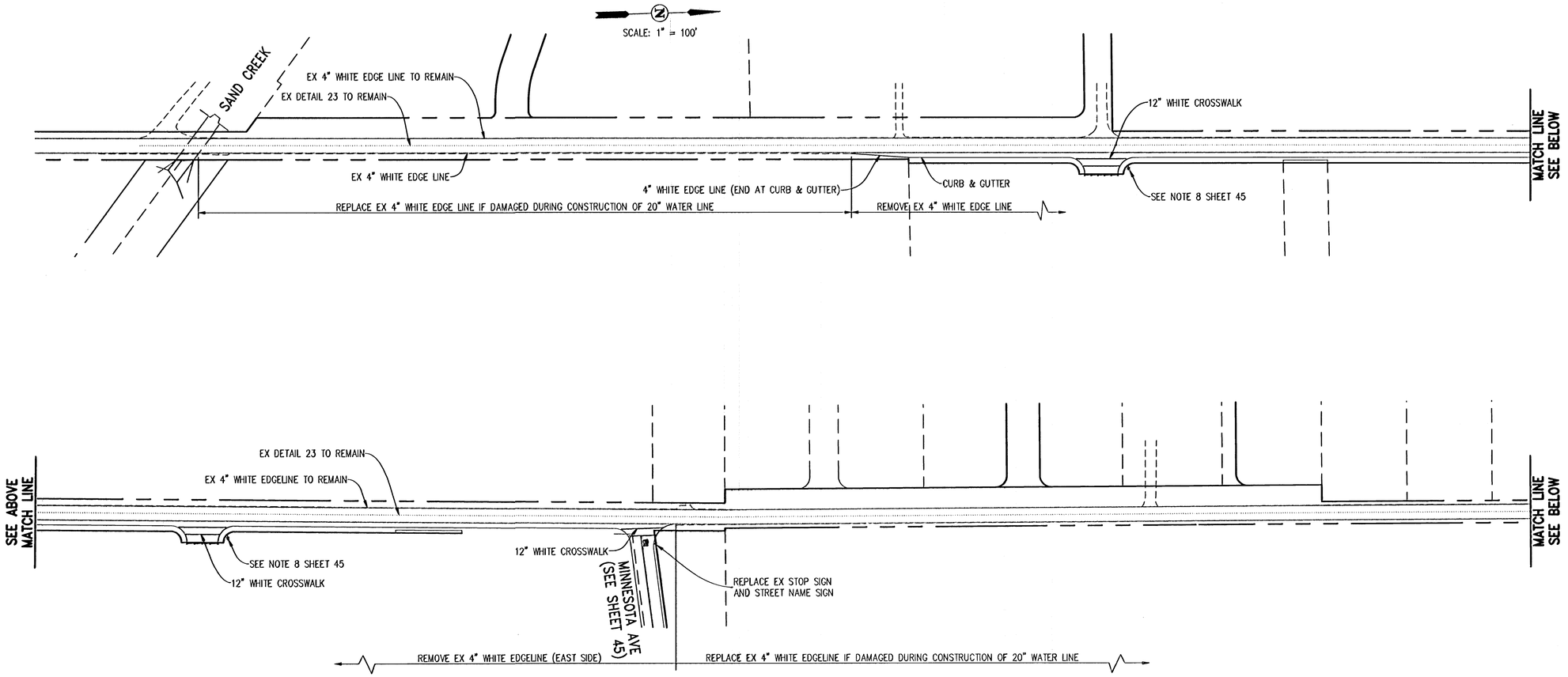

REGISTERED PROFESSIONAL ENGINEER KENNETH R. TAPPIN 52845 EXP.12/31/02 CIVIL STATE OF CALIFORNIA

THESE ARE THE FINAL CONSTRUCTION PLANS FOR THE PROJECT WITH THE ADDITIONS NOTED FOR FIELD CHANGES BROUGHT TO THE ATTENTION OF THE ENGINEER BY THE DEVELOPER, CONTRACTOR, AND THE CITY ENGINEER.

KENNETH R. TAPPIN RCE 52845 — 8-30-2000
EXP. 12/31/02 — DATE

CIP 98-0720
Improvement Plan
Special Planning Area 1 - Signing and Striping Plan - Fairview Avenue

BRENTWOOD
ENGINEERING DEPARTMENT
708 THIRD STREET, BRENTWOOD, CA 94513

cbg Carlson, Barbee & Gibson, Inc.
CIVIL ENGINEERS • SURVEYORS • PLANNERS
2000 CROW CANYON PLACE, SUITE 250, SAN RAMON, CALIFORNIA 94583
TEL (925) 866-0322 FAX (925) 866-8575

IMPROVEMENT PLAN — AD 98-2/CIFP 98-1

SIGNING AND STRIPING PLAN
FAIRVIEW AVENUE

BRENTWOOD — CALIFORNIA

NO.	REVISIONS	BY	APP	DATE

DESIGNED UNDER THE DIRECTION OF:
KENNETH R. TAPPIN — DATE: 5-19-99
R.C.E. No. 52845 REGISTRATION EXPIRES 12-31-02
DESIGN: TER — DATE: 4-13-99
DRAWN: JOB — DATE: 4-13-99
CHECKED: KRT — DATE: 4-13-99

REGISTERED PROFESSIONAL ENGINEER KENNETH R. TAPPIN 52845 EXP.12/31/02 CIVIL STATE OF CALIFORNIA

SHEET 46 OF 50 SHEETS

6/21/00 AS BUILT F:\94453\ACAD\PHASE3O\PJP46
JOB NO. 94453-30
CIP 98-0720

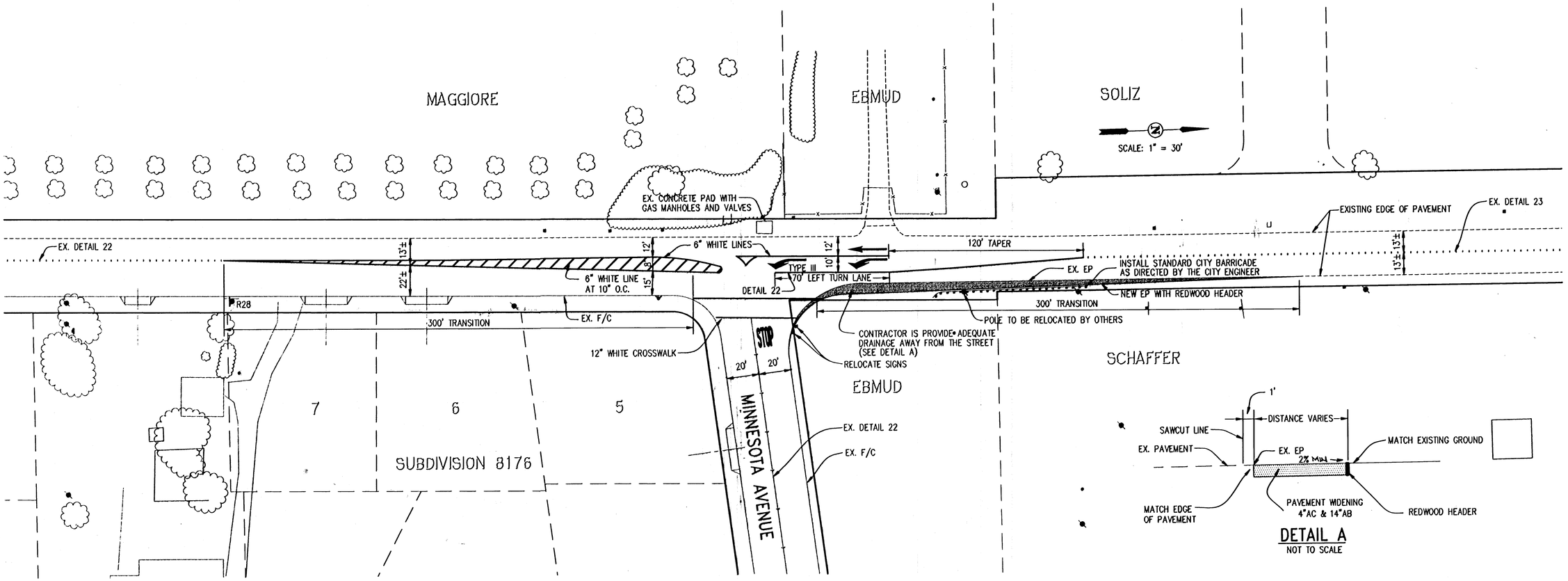

DETAIL A
NOT TO SCALE

SIGNING AND STRIPING NOTES:

1. ALL SIGNING AND STRIPING WORK SHALL BE DONE IN CONFORMANCE WITH CALIFORNIA DEPARTMENT OF TRANSPORTATION (CALTRANS) STANDARD SPECIFICATIONS, STANDARD PLANS, SIGN AND SPECIFICATION SHEETS, TRAFFIC MANUAL AND SPECIAL PROVISIONS.
2. THE CONTRACTOR SHALL NOTIFY THE CITY ENGINEER A MINIMUM OF TWO WORKING DAYS PRIOR TO THE DAY OF LAYOUT OF THE PROPOSED SIGNING AND STRIPING.
3. THE CONTRACTOR SHALL BE RESPONSIBLE FOR LAYOUT AND CAT TRACKING OF ALL PROPOSED STRIPING AND MARKING. NO PERMANENT STRIPING OR MARKING SHALL BE PLACED UNTIL CAT TRACKING IS APPROVED BY THE CITY.
4. PAVEMENT LEGENDS, CROSSWALKS, CENTERLINES AND SOLID WHITE LINES SHALL BE INSTALLED USING THERMOPLASTIC PER CALTRANS STANDARDS.
5. ALL STREET SIGN PLACEMENTS SHALL BE PER CITY STANDARDS.
6. ALL DETAIL NUMBERS REFER TO CALTRANS STANDARD PLANS STRIPING DETAILS.
7. STOP SIGNS SHALL BE 30" HIGH INTESITY SHEETING OVER 0.080 ALUMINUM.
8. STOP SIGN AND STREET NAME SIGN TO BE INSTALLED AS PART OF FUTURE SUBDIVISION.
9. POST NEW TRAFFIC SIGNS ON ELECTROLIER POLES WHEN FEASIBLE.

LEGEND:

- TRAFFIC SIGN
- R1 "STOP" SIGN
- R2 25 MPH SPEED LIMIT SIGN
- R26 "NO PARKING" SIGN
- R28 "NO PARKING ANY TIME" SIGN
- W63 "ADVANCE SCHOOL SYMBOL" SIGN
- PAVEMENT WIDENING

REGISTERED PROFESSIONAL ENGINEER KENNETH R. TAPPIN 52845 EXP.12/31/02 CIVIL STATE OF CALIFORNIA

THESE ARE THE FINAL CONSTRUCTION PLANS FOR THE PROJECT WITH THE ADDITIONS NOTED FOR FIELD CHANGES BROUGHT TO THE ATTENTION OF THE ENGINEER BY THE DEVELOPER, CONTRACTOR, AND THE CITY ENGINEER.

KENNETH R. TAPPIN RCE 52845 EXP. 12/31/02 — DATE 8-30-2000

REVIEWED FOR CONFORMANCE WITH CITY OF BRENTWOOD STANDARDS AND REQUIREMENTS. APPROVAL FOR CONSTRUCTION IS SUBJECT TO THE INFORMATION SHOWN HEREIN. THE CITY OF BRENTWOOD AND THE UNDERSIGNED ARE NOT RESPONSIBLE FOR ANY ERRORS OR OMISSIONS THAT MAY EXIST ON THESE PLANS.

JOHN E. STEVENSON, CITY ENGINEER — DATE
R.C.E. No. 22446 — EXPIRES 9-30-01

TRAFFIC ENGINEER	DATE	POLICE DEPT	DATE	MAINTENANCE DEPT	DATE	ECCID	DATE	FIRE DEPT	DATE

CIP 98-0720
Improvement Plan
Special Planning Area "L" Fairview Avenue Left Turn Lane at Minnesota Avenue

BRENTWOOD
ENGINEERING DEPARTMENT
708 THIRD STREET, BRENTWOOD, CA 94513

cbg Carlson, Barbee & Gibson, Inc.
CIVIL ENGINEERS • SURVEYORS • PLANNERS
2999 OAKY CANYON PLACE, SUITE 250, SAN RAMON, CALIFORNIA 94583
TEL (925) 866-0322 FAX (925) 866-8575

IMPROVEMENT PLAN — **AD 98-2/CIFP 98-1**

FAIRVIEW AVENUE LEFT TURN LANE AT MINNESOTA AVENUE

BRENTWOOD — CALIFORNIA

NO.	REVISIONS	BY	APP	DATE

DESIGNED UNDER THE DIRECTION OF:
KENNETH R. TAPPIN
R.C.E. No. 52845 REGISTRATION EXPIRES 12-31-02 — DATE 8-10-99

DESIGN: TER — DATE: 4-13-99
DRAWN: JOB — DATE: 4-13-99
CHECKED: KRT — DATE: 4-13-99

REGISTERED PROFESSIONAL ENGINEER KENNETH R. TAPPIN 52845 EXP.12/31/02 CIVIL STATE OF CALIFORNIA

SHEET 47 OF - SHEETS

F:\94453\ACAD\PHASE3\PLP47
JOB NO. 94453-30

CIP 98-0720

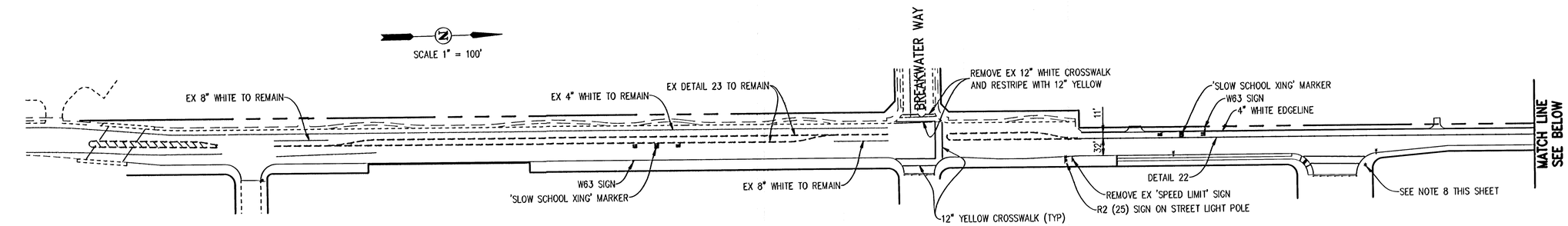

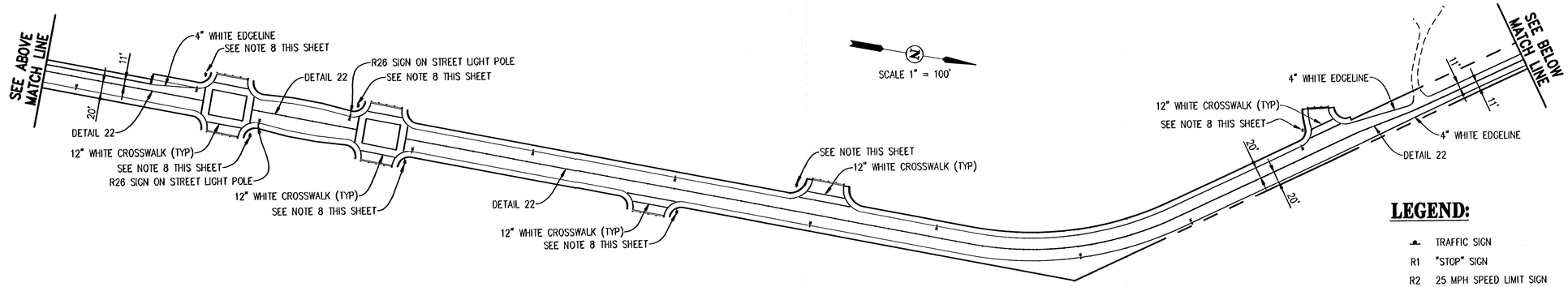

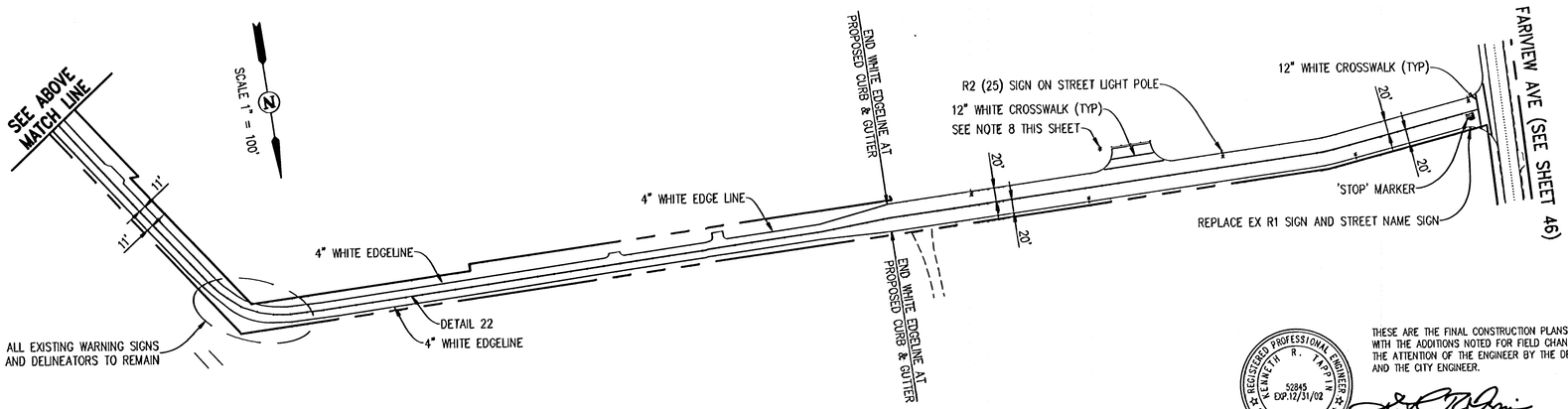

LEGEND:

- TRAFFIC SIGN
- R1 "STOP" SIGN
- R2 25 MPH SPEED LIMIT SIGN
- R26 "NO PARKING" SIGN
- W63 "ADVANCE SCHOOL SYMBOL" SIGN

SIGNING AND STRIPING NOTES:

1. ALL SIGNING AND STRIPING WORK SHALL BE DONE IN CONFORMANCE WITH CALIFORNIA DEPARTMENT OF TRANSPORTATION (CALTRANS) STANDARD SPECIFICATIONS, STANDARD PLANS, SIGN AND SPECIFICATION SHEETS, TRAFFIC MANUAL AND SPECIAL PROVISIONS.
2. THE CONTRACTOR SHALL NOTIFY THE CITY ENGINEER A MINIMUM OF TWO WORKING DAYS PRIOR TO THE DAY OF LAYOUT OF THE PROPOSED SIGNING AND STRIPING.
3. THE CONTRACTOR SHALL BE RESPONSIBLE FOR LAYOUT AND CAT TRACKING OF ALL PROPOSED STRIPING AND MARKING. NO PERMANENT STRIPING OR MARKING SHALL BE PLACED UNTIL CAT TRACKING IS APPROVED BY THE CITY.
4. PAVEMENT LEGENDS, CROSSWALKS, CENTERLINES AND SOLID WHITE LINES SHALL BE INSTALLED USING THERMOPLASTIC PER CALTRANS STANDARDS.
5. ALL STREET SIGN PLACEMENTS SHALL BE PER CITY STANDARDS.
6. ALL DETAIL NUMBERS REFER TO CALTRANS STANDARD PLANS STRIPING DETAILS.
7. STOP SIGNS SHALL BE 30" HIGH INTESITY SHEETING OVER 0.080 ALUMINUM.
8. STOP SIGN AND STREET NAME SIGN TO BE INSTALLED AS PART OF FUTURE SUBDIVISION.
9. POST NEW TRAFFIC SIGNS ON ELECTROLIER POLES WHEN FEASIBLE.

REGISTERED PROFESSIONAL ENGINEER KENNETH R. TAPPIN 52845 EXP.12/31/02 CIVIL STATE OF CALIFORNIA

THESE ARE THE FINAL CONSTRUCTION PLANS FOR THE PROJECT WITH THE ADDITIONS NOTED FOR FIELD CHANGES BROUGHT TO THE ATTENTION OF THE ENGINEER BY THE DEVELOPER, CONTRACTOR, AND THE CITY ENGINEER.

KENNETH R. TAPPIN RCE 52845 EXP. 12/31/02 — DATE 8-30-2000

CIP 98-0720
Improvement Plan
Specials Planning and Traffic Signing and Striping Plan - Minnesota Avenue

BRENTWOOD
ENGINEERING DEPARTMENT
708 THIRD STREET, BRENTWOOD, CA 94513

cbg Carlson, Barbee & Gibson, Inc.
CIVIL ENGINEERS • SURVEYORS • PLANNERS
2000 CROW CANYON PLACE, SUITE 250
SAN RAMON, CALIFORNIA 94583
TEL (925) 866-0322
FAX (925) 866-8575

IMPROVEMENT PLAN — AD 98-2/CIFP 98-1

SIGNING AND STRIPING PLAN MINNESOTA AVENUE

BRENTWOOD CALIFORNIA

NO.	REVISIONS	BY	APP	DATE

DESIGNED UNDER THE DIRECTION OF: — DATE 5-19-99
KENNETH R. TAPPIN
R.C.E. No. 52845 REGISTRATION EXPIRES 12-31-02

DESIGN: TER	DATE: 4-13-99
DRAWN: JOB	DATE: 4-13-99
CHECKED: KRT	DATE: 4-13-99

REGISTERED PROFESSIONAL ENGINEER KENNETH R. TAPPIN 52845 EXP.12/31/02 CIVIL STATE OF CALIFORNIA

SHEET 45 OF 50 SHEETS

6/21/00 AS BUILT F:\94453\ACAD\PHASE30\P\P45 JOB NO. 94453-30

CIP 98-0720

LEGEND:

PAVEMENT WIDENING

CURVE TABLE

NOTE: CURVE NUMBERS ARE SHOWN WITH 'O' ON PLAN.

CURVE	RADIUS	DELTA	LENGTH	DESCRIPTION
C1	30.00'	90°00'00"	47.12'	L_FC
C2	300.00'	9°48'33"	51.36'	C/L SS

NOTE:

1. GRADE 10' OF FUTURE PADS TO THE ELEVATIONS SHOWN.

DIGALERT
DIAL TOLL FREE
1-800-642-2444
AT LEAST TWO DAYS BEFORE YOU DIG
UNDERGROUND SERVICE ALERT OF NORTHERN CALIFORNIA

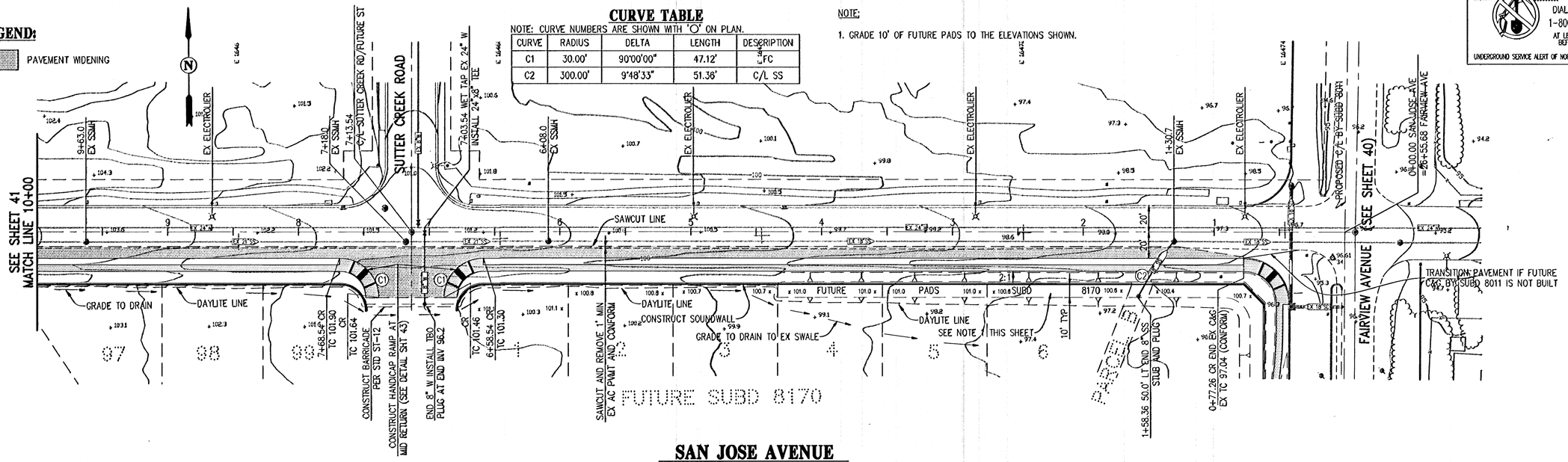

SAN JOSE AVENUE

SCALE: 1" = 40'

EX CL ELEV	103.9	103.8	103.5	103.2	103.0	102.7	102.4	102.2	102.0	101.8	101.2	101.0	100.8	100.6	100.5	100.3	100.2	100.0	99.9	99.8	99.6	99.4	99.1	99.1	98.9	98.7	99.4	98.2	98.0	97.8	97.6	97.4	97.1
EX CROSS SLOPE(%)	0.75	1.24	1.34	0.80	0.60	0.57	0.66	0.48	0.57	0.66	1.46	1.08	0.80	0.68	0.25	0.21	0.17	0.12	0.40	0.38	0.27	0.37	0.57	0.92	0.76	0.70	0.71	1.12	0.97	0.92	1.07	1.20	1.22
EX EP ELEV	103.8	103.6	103.3	103.1	102.9	102.7	102.37	102.1	102.0	101.8	101.0	100.9	100.7	100.5	100.4	100.3	100.2	99.9	99.9	99.9	99.7	99.6	99.3	99.1	99.0	98.8	98.6	98.3	98.0	97.9	97.7	97.5	97.2	96.9
PROPOSED CROSS SLOPE(%)	2.59	2.65	2.09	2.58	2.50	2.21	1.68	1.70	2.28	2.46	2.55	2.88	2.73	1.90	2.43	2.68	2.91	2.05	2.62	2.67	2.79	2.49	1.89	3.38	3.75	3.74	3.49	2.02	3.06	3.54	3.21	2.58	1.52
PROPOSED TC ELEV	104.03	103.80	103.57	103.34	103.11	102.88	102.65	102.42	102.19	101.96	101.25	101.10	100.95	100.80	100.65	100.50	100.35	100.20	100.07	99.94	99.75	99.54	99.33	99.12	98.91	98.70	98.49	98.28	98.07	97.86	97.65	97.44	97.23

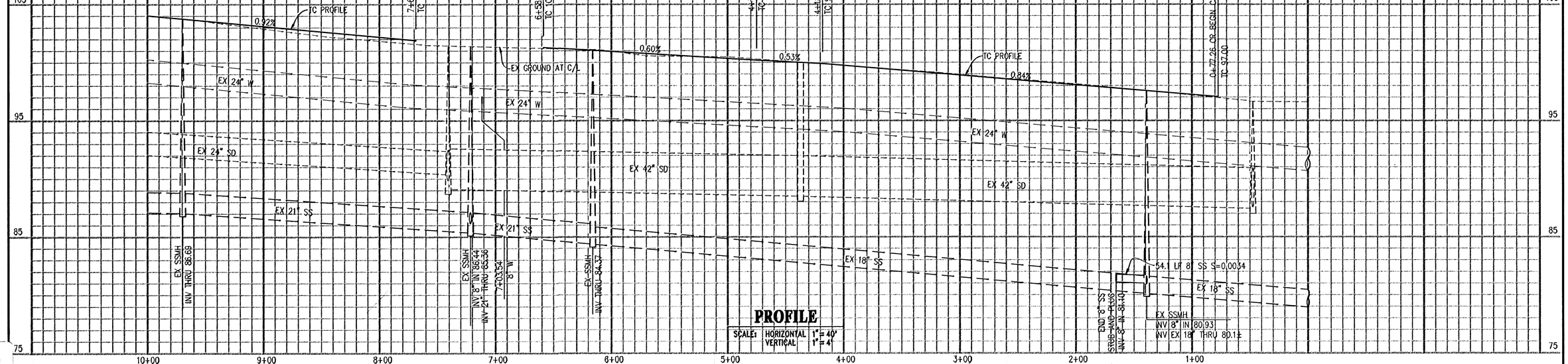

PROFILE

SCALE: HORIZONTAL 1" = 40'
VERTICAL 1" = 4'

CIP 98-0720
Improvement Plan
Special Planning Area 1 - Plan and Profile- San Jose Ave. (0+00 - 10+00)

BRENTWOOD
ENGINEERING DEPARTMENT
708 THIRD STREET, BRENTWOOD, CA 94513

cbg Carlson, Barbee & Gibson, Inc.
CIVIL ENGINEERS • SURVEYORS • PLANNERS
2000 CROW CANYON PLACE, SUITE 250
SAN RAMON, CALIFORNIA 94583
TEL (925) 866-0322
FAX (925) 866-8575

IMPROVEMENT PLAN

AD 98-2/CIFP 98-1

PLAN AND PROFILE
SAN JOSE AVENUE (0+00 - 10+00)

BRENTWOOD CALIFORNIA

NO.	REVISIONS	BY	APP	DATE

DESIGNED UNDER THE DIRECTION OF:
KENNETH R. TAPPIN R.C.E. No. 52845 REGISTRATION EXPIRES 12-31-98
DATE 9-3-98

DESIGN: TER DATE: 5-8-98
DRAWN: JOB DATE: 5-8-98
CHECKED: KRT DATE: 5-8-98

REGISTERED PROFESSIONAL ENGINEER KENNETH R. TAPPIN 52845 EXP. 12/31/98 CIVIL STATE OF CALIFORNIA

SHEET 41 OF - SHEETS

G:\1806\ACAD\PP\PHASE3\0\P41
JOB NO. 94453-30

CIP 98-0720

G:\1806\ACAD\PP\PHASE3\1\P41.dwg Thu Sep 03 14:44:31 1998

DIGALERT
DIAL TOLL FREE
1-800-642-2444
AT LEAST TWO DAYS BEFORE YOU DIG
UNDERGROUND SERVICE ALERT OF NORTHERN CALIFORNIA

LEGEND:

- EXISTING TREE TO BE REMOVED
- PAVEMENT WIDENING

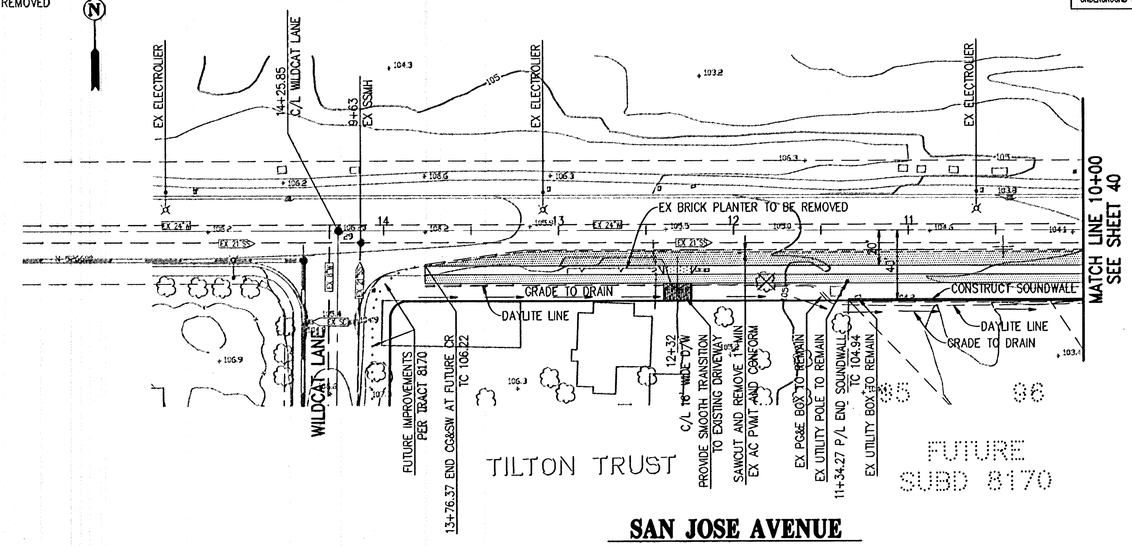

SAN JOSE AVENUE

SCALE: 1" = 40'

EX CL ELEV	-	-	106.0	105.9	105.7	105.6	105.5	105.3	105.1	105.0	104.8	104.6	104.4	104.3	104.1	103.9
EX CROSS SLOPE(%)	-	-	2.16	1.48	1.35	1.88	1.43	1.18	0.77	0.64	0.62	0.76	0.93	0.45	0.37	0.75
EX EP ELEV	-	-	105.7	105.7	105.6	105.4	105.3	105.1	105.0	104.9	104.7	104.5	104.3	104.2	104.1	103.8
PROPOSED CROSS SLOPE(%)	-	-	3.32	3.73	3.54	2.90	3.03	2.73	3.12	2.95	2.63	2.12	1.54	2.76	2.62	2.59
PROPOSED TC ELEV	-	-	105.96	105.84	105.71	105.59	105.46	105.34	105.19	105.04	104.89	104.73	104.58	104.43	104.26	104.03

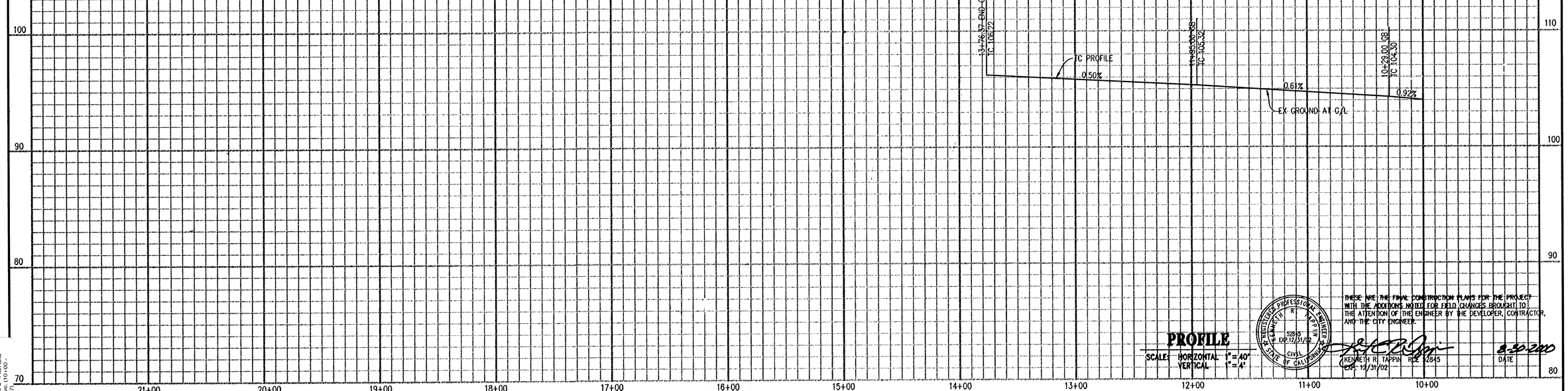

THESE ARE THE FINAL CONSTRUCTION PLANS FOR THE PROJECT WITH THE ADDITIONS NOTED FOR FIELD CHANGES BROUGHT TO THE ATTENTION OF THE ENGINEER BY THE DEVELOPER, CONTRACTOR, AND THE CITY ENGINEER.

PROFILE

SCALE: HORIZONTAL 1" = 40'
VERTICAL 1" = 4'

REGISTERED PROFESSIONAL ENGINEER KENNETH R. TAPPIN 52845 EXP. 12/31/02 CIVIL STATE OF CALIFORNIA

KENNETH R. TAPPIN RCE 52845
EXP. 12/31/02

8-30-2000
DATE

CIP 98-0720
Improvement Plan
Special Planning Area 'L' - Plan and Profile - San Jose Ave. (10+00 - 13+76.37)

BRENTWOOD
ENGINEERING DEPARTMENT
708 THIRD STREET, BRENTWOOD, CA 94513

cbg Carlson, Barbee & Gibson, Inc.
CIVIL ENGINEERS • SURVEYORS • PLANNERS
2000 CROW CANYON PLACE, SUITE 250
SAN RAMON, CALIFORNIA 94583
TEL (925) 866-0322
FAX (925) 866-8575

IMPROVEMENT PLAN — AD 98-2/CIFP 98-1

PLAN AND PROFILE
SAN JOSE AVENUE (10+00 - 13+76.37)

BRENTWOOD — CALIFORNIA

NO.	REVISIONS	BY	APP	DATE

DESIGNED UNDER THE DIRECTION OF:
KENNETH R. TAPPIN
R.C.E. No. 52845 REGISTRATION EXPIRES 12-31-98
9-3-98
DATE

DESIGN: TER — DATE: 5-8-98
DRAWN: JOB — DATE: 5-8-98
CHECKED: KRT — DATE: 5-8-98

REGISTERED PROFESSIONAL ENGINEER KENNETH R. TAPPIN 52845 EXP. 12/31/98 CIVIL STATE OF CALIFORNIA

SHEET 42 OF 50 SHEETS

6/21/00 AS BUILT

G:\806\ACAD\IP\PHASE30\IP42
JOB NO. 94453-30

CIP 98-0720

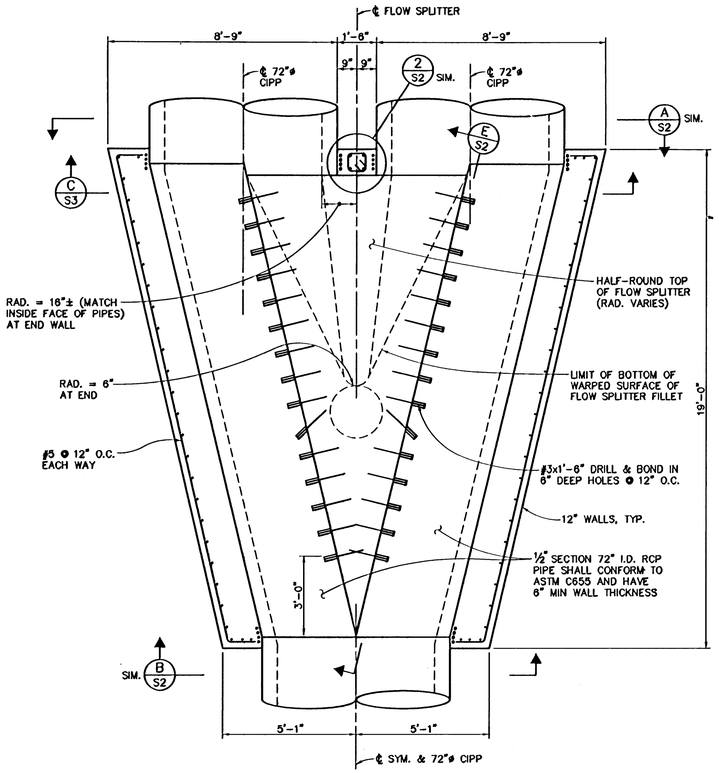

BOX TYPE JB 2 – PLAN
3/8" = 1'-0"

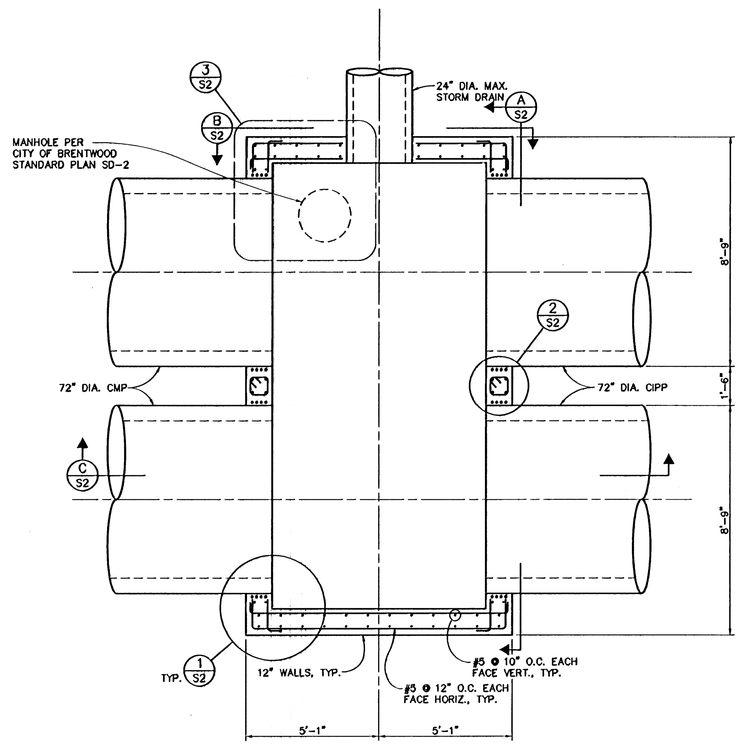

BOX TYPE JB 1 – PLAN
3/8" = 1'-0"

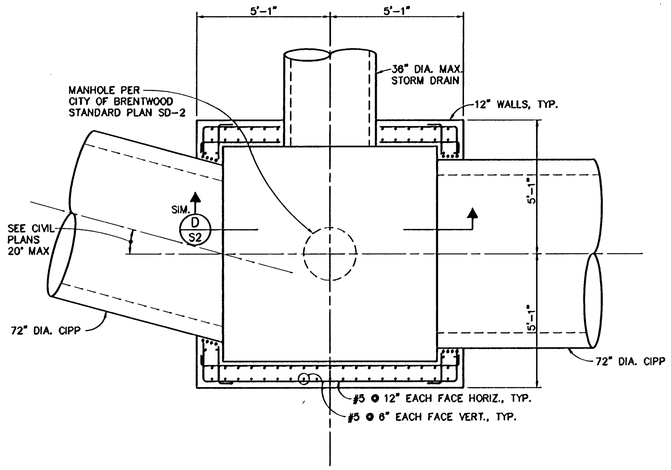

MODIFIED TYPE III MANHOLE BASE – PLAN 1
3/8" = 1'-0"

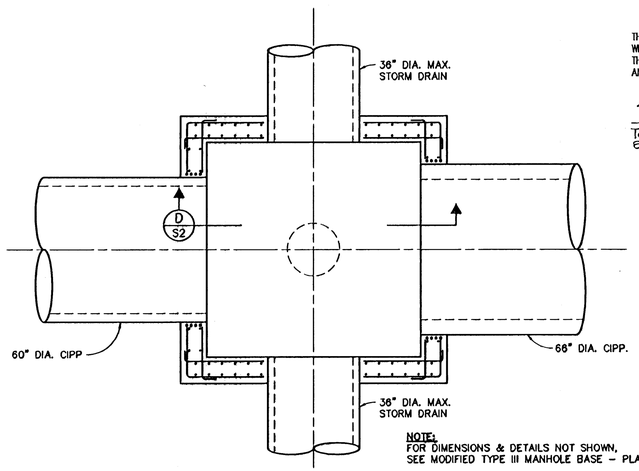

NOTE:
FOR DIMENSIONS & DETAILS NOT SHOWN, SEE MODIFIED TYPE III MANHOLE BASE – PLAN 1

MODIFIED TYPE III MANHOLE BASE – PLAN 2
3/8" = 1'-0"

THESE ARE THE FINAL CONSTRUCTION PLANS FOR THE PROJECT WITH THE ADDITIONS NOTED FOR FIELD CHANGES BROUGHT TO THE ATTENTION OF THE ENGINEER BY THE DEVELOPER, CONTRACTOR, AND THE CITY ENGINEER.

TODD M. GOOLKASIAN
RE 3543

8-21-00
DATE

NOTE:
1. PIPE SIZE, THICKNESS AND ORIENTATION IS SCHEMATIC ONLY. FOR ACTUAL PIPE SIZES, INVERT ELEVATIONS, LOCATION AND ORIENTATION OF JUNCTION BOXES, AND TYPE OF BOX REQUIRED, SEE CIVIL PLANS.
2. CONSTRUCTION JOINTS SHOWN ON THE PLANS ARE OPTIONAL AND MAY BE OMITTED AT THE CONTRACTOR'S OPTION.
3. DRAWINGS FOR BOX TYPE JB 2 SHOW THE USE OF PRECAST PIPE. AT HIS OPTION, THE CONTRACTOR MAY USE A CONVENTIONAL FORM SYSTEM AND CONSTRUCT JB 2 AS ENTIRELY CAST-IN-PLACE. PROPOSED ALTERNATIVE CONSTRUCTION DETAILS SHALL BE SUBMITTED TO THE CITY ENGINEER FOR REVIEW AND APPROVAL.

STRUCTURAL SPECIFICATIONS

GENERAL
ALL WORK SHALL CONFORM TO THE REQUIREMENTS OF CONTRA COSTA COUNTY STANDARD SPECIFICATIONS FOR PUBLIC WORKS CONSTRUCTION, 1988 EDITION, AND AS MODIFIED HEREIN.

CONCRETE
ALL CONCRETE SHALL HAVE PROPERTIES AS LISTED BELOW.

CONCRETE ELEMENT	MIN. 28 DAY COMPRESSIVE STRENGTH	MAX. SIZE AGGREGATE (INCHES)	MAX. SLUMP (INCHES)	TOTAL AIR CONTENT (%)
WALLS & SLABS	3250	3/4	4	4%±1.5%

APPROXIMATELY 3 OUNCES PER SACK OF CEMENT OF POZZOLITH 300R OR APPROVED EQUAL SHALL BE USED AS A WATER DISPERSING ADDITIVE. AT CONTRACTOR'S OPTION, AN AIR ENTRAINING AGENT CONFORMING TO THE LATEST REVISION OF ASTM SPECIFICATION C 260 MAY BE ADDED TO THE CONCRETE TO PROVIDE SPECIFIED AMOUNTS OF ENTRAINED AIR. CEMENT SHALL BE ACCORDANCE WITH THE STANDARD SPECIFICATIONS FOR PORTLAND CEMENT PER ASTM DESIGNATION C150, TYPE II.

REINFORCING STEEL
BARS FOR REINFORCING SHALL BE GRADE 60 DEFORMED BARS CONFORMING TO ASTM A615 INCLUDING SUPPLEMENT S1. LAP SPLICES SHALL BE IN ACCORDANCE WITH ACI 318-89 UNLESS NOTED OTHERWISE ON THE PLANS.

ADHESIVE ANCHORING SYSTEMS FOR CONCRETE AND CONCRETE BLOCK
EPOXY USED FOR ANCHORING THREADED RODS OR REINFORCING SHALL BE AN "EPOXY RESIN" AND SHALL CONFORM TO ASTM C881, TYPE IV, GRADE 3, CLASS B OR C. GRADE 2 MAY BE USED IN VERTICAL DOWN APPLICATIONS. THE PROPORTIONS SHALL BE AS RECOMMENDED BY THE MANUFACTURER. PREPARATION OF THE CONCRETE INCLUDING DRILLING OF THE HOLES FOR ANCHORS, AS WELL AS EPOXY AND ANCHOR INSTALLATIONS SHALL BE AS RECOMMENDED BY THE MANUFACTURER.

SHOP DRAWINGS FOR THE ENGINEERS REVIEW WILL BE REQUIRED AS FOLLOWS:
1. MIX DESIGNS;
2. REINFORCING STEEL;

CONTRACTOR SHALL SUBMIT TWO SETS OF PRINTS AND ONE SET OF SEPIAS FOR REVIEW. FABRICATION SHALL NOT PROCEED UNTIL SHOP DRAWINGS HAVE BEEN REVIEWED BY THE ENGINEER.

SPECIAL INSPECTIONS
THE OWNER SHALL EMPLOY A SPECIAL INSPECTOR DURING CONSTRUCTION ON THE FOLLOWING TYPES OF WORK:

CONCRETE
- PROVIDE CONTINUOUS INSPECTION DURING THE PLACEMENT OF ALL CONCRETE.
- SAMPLING FRESH CONCRETE: ASTM C 172, EXCEPT MODIFIED FOR SLUMP TO COMPLY WITH ASTM C 94.
- SLUMP: ASTM C 143, ONE TEST AT POINT OF DISCHARGE FOR 100 C.Y. OR FRACTION THEREOF FOR EACH TYPE OF CONCRETE; ADDITIONAL TESTS REQUIRED WHEN CONCRETE CONSISTENCY SEEMS TO HAVE CHANGED.
- AIR CONTENT: ASTM C 173, VOLUMETRIC METHOD FOR LIGHT-WEIGHT OR NORMAL WEIGHT CONCRETE; ASTM C 231 PRESSURE FOR NORMAL WEIGHT CONCRETE, ONE FOR EACH 100 C.Y. PLACED OR FRACTION THEREOF FOR EACH TYPE OF AIR-ENTRAINED CONCRETE.
- CONCRETE TEMPERATURE: TEST HOURLY WHEN AIR TEMPERATURE IS 50 DEGREES F. (4 DEGREES C.) AND BELOW, AND WHEN 85 DEGREES F. (27 DEGREES C.) AND ABOVE; AND EACH TIME A SET OF COMPRESSION TEST SPECIMENS ARE MADE.
- COMPRESSION TEST SPECIMEN: ASTM C 31, TAKE ONE SET OF 3 STANDARD CYLINDERS FOR EACH 100 C.Y. OF CONCRETE OR FRACTION THEREOF FOR EACH TYPE OF CONCRETE TAKEN EACH DAY. MOLD AND STORE CYLINDERS FOR LABORATORY CURED TEST SPECIMENS EXCEPT WHEN FIELD-CURE TEST SPECIMENS ARE REQUIRED.
- FIELD CURED COMPRESSION TEST SPECIMENS: ASTM C31, TAKE ONE SET OF 3 STANDARD CYLINDERS FOR EACH 100 C.Y. OF CONCRETE OR FRACTION THEREOF FOR EACH TYPE OF CONCRETE PLACED EACH DAY; WHEN THE CONTRACTOR PLANS TO REMOVE FORMWORK, FALSE-WORK, OR SHORING SOONER THAN 7 DAYS FOR VERTICAL FORMWORK AND 14 DAYS FOR SHORING AND FALSEWORK; OR WHEN POST-TENSIONING IS REQUIRED.
- COMPRESSIVE STRENGTH TESTS: ASTM C 39; ONE SPECIMEN TESTED AT 7 DAYS, TWO SPECIMENS TESTED AT 28 DAYS.

REINFORCING STEEL
- VERIFY THAT MILL CERTIFICATES SHOW REINFORCING STEEL TO BE IN COMPLIANCE WITH PROJECT SPECIFICATIONS.
- A 5' LONG SAMPLE OF EACH BAR SIZE FROM EACH HEAT FOR EACH TYPE OF REINFORCING STEEL SHALL BE TESTED FOR ULTIMATE STRENGTH, YIELD STRESS, MODULUS OF ELASTICITY AND PERCENT ELONGATION AT RUPTURE.
- PROVIDE PERIODIC INSPECTION OF THE PLACEMENT OF ALL REINFORCING STEEL FOR SHOTCRETE, FOR STRUCTURAL MASONRY AND FOR CONCRETE WHICH IS REQUIRED TO HAVE CONTINUOUS INSPECTION.

CONSTRUCTION LIABILITY
CONSTRUCTION CONTRACTOR AND HIS SUBCONTRACTORS AGREE THAT IN ACCORDANCE WITH GENERALLY ACCEPTED CONSTRUCTION PRACTICES, CONSTRUCTION CONTRACTOR AND HIS SUBCONTRACTORS WILL BE REQUIRED TO ASSUME SOLE AND COMPLETE RESPONSIBILITY FOR JOB SITE CONDITIONS DURING THE COURSE OF CONSTRUCTION OF THE PROJECT, INCLUDING SAFETY OF ALL PERSONS AND PROPERTY; THAT THIS REQUIREMENT SHALL BE MADE TO APPLY CONTINUOUSLY AND NOT LIMITED TO NORMAL WORKING HOURS, AND CONSTRUCTION CONTRACTOR AND HIS SUBCONTRACTORS FURTHER AGREE TO DEFEND, INDEMNIFY AND HOLD DESIGN PROFESSIONAL HARMLESS FROM ANY AND ALL LIABILITY, REAL OR ALLEGED, IN CONNECTION WITH THE PERFORMANCE OF WORK ON THIS PROJECT, EXCEPT LIABILITY ARISING FROM THE SOLE NEGLIGENCE OF DESIGN PROFESSIONAL.

CIP 98-0720
Improvement Plan-Special Planning Area 1-Storm Drain Junction Boxes CIFP-98

BRENTWOOD
ENGINEERING DEPARTMENT
708 THIRD STREET, BRENTWOOD, CA 94513

BIGGS CARDOSA ASSOCIATES INC
STRUCTURAL ENGINEERS
1871 The Alameda, Suite 200
San Jose, California 95126
408-296-6515

IMPROVEMENT PLAN — CIFP 98-1

PLAN
STORM DRAIN JUNCTION BOXES CIFP-98

BRENTWOOD — CALIFORNIA

NO.	REVISIONS	BY	APP	DATE
1	RELEASED TO CLIENT	TMG		7/17/98
2	RELEASED FOR CONSTRUCTION	TMG		7/21/98
3	REVISED JB 2	TMG		8/19/98
4	REVISED JB 2	TMG		9/3/98

DESIGNED UNDER THE DIRECTION OF:
TODD M GOOLKASIAN
SE No. 3543
9-3-98
DATE

DESIGN:	S. M. GOLDWASSER	DATE:	7-16-98
DRAWN:	T.E. HICKS	DATE:	7-16-98
CHECKED:	M. A THOMAS	DATE:	7-16-98

REGISTERED PROFESSIONAL ENGINEER TODD M. GOOLKASIAN No. 53543 Exp. 3-31-01 STRUCTURAL STATE OF CALIFORNIA

SHEET S1 OF 50 SHEETS

6/21/00 AS BUILT (9816891) 9816891

CIP 98-0720

453-39

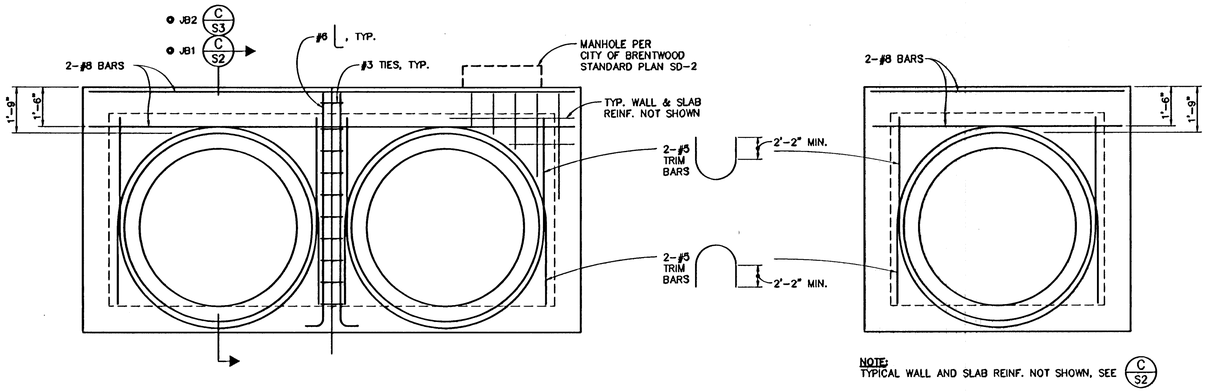

SECTION A S2
3/8" = 1'-0"

SECTION B S2
3/8" = 1'-0"

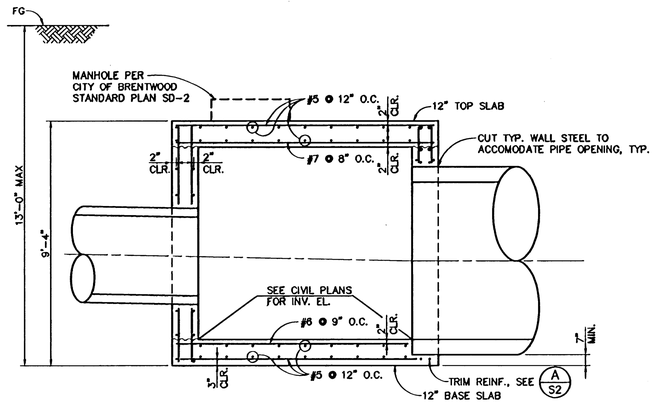

SECTION C S2
3/8" = 1'-0"

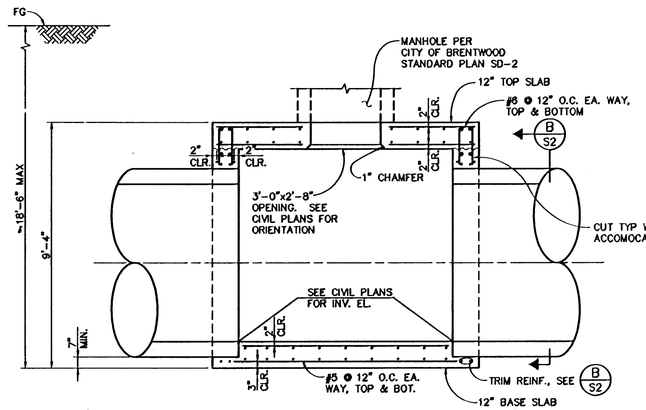

SECTION D S2
3/8" = 1'-0"

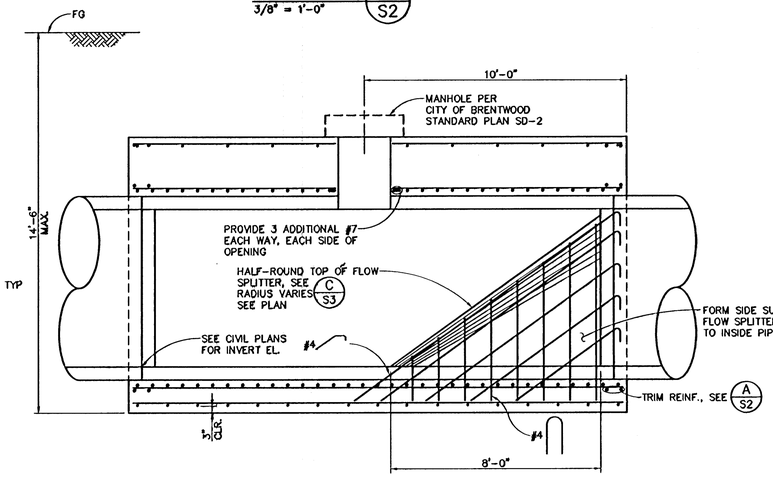

SECTION E S2
3/8" = 1'-0"

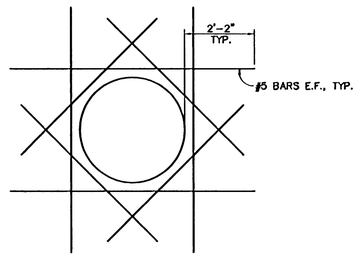

REINFORCING AT PIPE OPENINGS ≤ 36" DIA.
NO SCALE

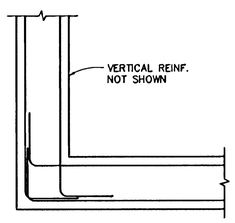

DETAIL 1 S2
3/4" = 1'-0"

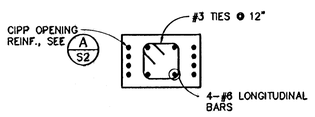

DETAIL 2 S2
3/4" = 1'-0"

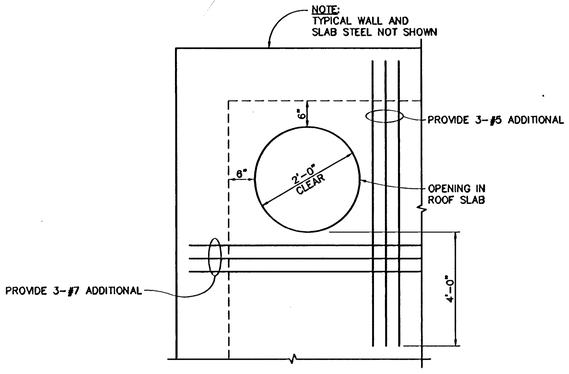

DETAIL 3 S2
3/4" = 1'-0"

THESE ARE THE FINAL CONSTRUCTION PLANS FOR THE PROJECT WITH THE ADDITIONS NOTED FOR FIELD CHANGES BROUGHT TO THE ATTENTION OF THE ENGINEER BY THE DEVELOPER, CONTRACTOR, AND THE CITY ENGINEER.

TODD M. GOOLKASIAN
RE 3543

8-21-00
DATE

CIP 98-0720
Improvement Plan
Special Planning Area I - Sections and Details- Storm Drain Junction Boxes CIFP-98 1

BRENTWOOD
ENGINEERING DEPARTMENT
708 THIRD STREET, BRENTWOOD, CA 94513

BIGGS CARDOSA ASSOCIATES INC
STRUCTURAL ENGINEERS
1671 The Alameda, Suite 200
San Jose, California 95126
408-296-6516

BCA

IMPROVEMENT PLAN — CIFP 98-1

SECTIONS AND DETAILS
STORM DRAIN JUNCTION BOXES CIFP-98

BRENTWOOD — CALIFORNIA

NO.	REVISIONS	BY	APP	DATE
1	RELEASED TO CLIENT	TMG		7/17/98
2	RELEASED FOR CONSTRUCTION	TMG		7/21/98
3	REVISED JB 2	TMG		8/19/98
4	REVISED JB 2	TMG		9/3/98

DESIGNED UNDER THE DIRECTION OF:
TODD M GOOLKASIAN
RE No. 3543
9-3-98
DATE

DESIGN:	S. M. GOLDWASSER	DATE:	7-16-98
DRAWN:	T.E. HICKS	DATE:	7-16-98
CHECKED:	M. A THOMAS	DATE:	7-16-98

REGISTERED PROFESSIONAL ENGINEER — TODD M. GOOLKASIAN — No. 3543 — Exp. 3-31-01 — STRUCTURAL — STATE OF CALIFORNIA

SHEET S2
OF 50 SHEETS

6/21/00 AS BUILT (98166S2) 98166

CIP 98-0720

453-30

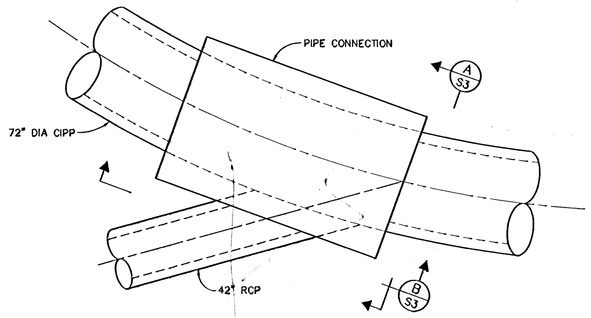

PLAN
1/8" = 1'-0"

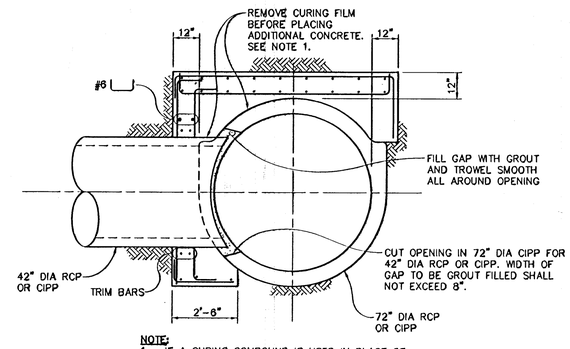

NOTE:
1. IF A CURING COMPOUND IS USED IN PLACE OF FILM FOR THE CIPP, SANDBLAST PIPE SURFACE BEFORE PLACING ADDITIONAL CONCRETE.

SECTION A/S3
3/8" = 1'-0"

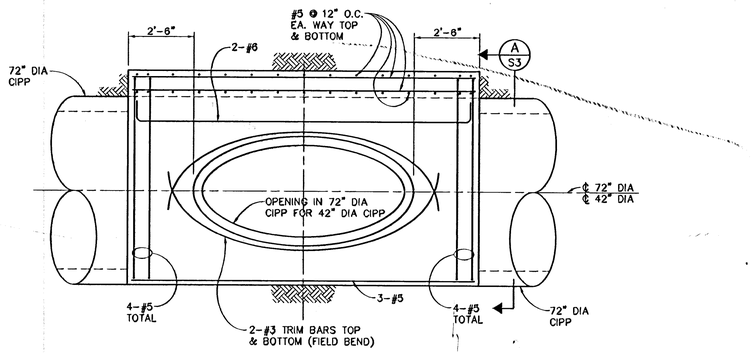

SECTION B/S3
3/8" = 1'-0"

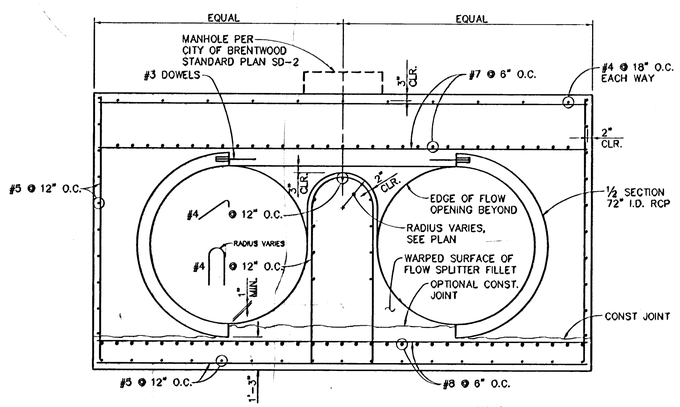

NOTE:
IF MULTIPLE LENGTHS OF PIPE ARE REQUIRED, CONTRACTOR SHALL MAKE ALLOWANCE FOR THE THICKENED 'BELL' END OF PIPES AS REQUIRED TO MATCH FLOW PROFILE OF 72" CIPP

SECTION C/S3
3/8" = 1'-0"

CIP 98-0720
Improvement Plan
Special Planning Area 1 - Sections and Details - Storm Drain Junction Boxes CIFP-98 2

BRENTWOOD
ENGINEERING DEPARTMENT
708 THIRD STREET, BRENTWOOD, CA 94513

BIGGS CARDOSA ASSOCIATES INC
STRUCTURAL ENGINEERS
1871 The Alameda, Suite 200
San Jose, California 95126
408-296-5515

BCA

IMPROVEMENT PLAN — CIFP 98-1

SECTIONS AND DETAILS
STORM DRAIN JUNCTION BOXES CIFP-98

BRENTWOOD — CALIFORNIA

NO.	REVISIONS	BY	APP	DATE
1	RELEASED FOR CLIENT	TMG		7/17/98
2	RELEASED FOR CONSTRUCTION	TMG		7/21/98
3	REVISED JB 2	TMG		8/19/98
4	REVISED JB 2	TMG		9/3/98

DESIGNED UNDER THE DIRECTION OF:
TODD M GOOLKASIAN
SE No. 3543
9-3-98
DATE

DESIGN:	S. M. GOLDWASSER	DATE:	7-16-98
DRAWN:	T.E. HICKS	DATE:	7-16-98
CHECKED:	M. A THOMAS	DATE:	7-16-98

REGISTERED PROFESSIONAL ENGINEER
TODD M. GOOLKASIAN
No. S3543
Exp. 3-31-01
STRUCTURAL
STATE OF CALIFORNIA

SHEET S3 OF 3 SHEETS

(98166S2) 98166

CIP 98-0720

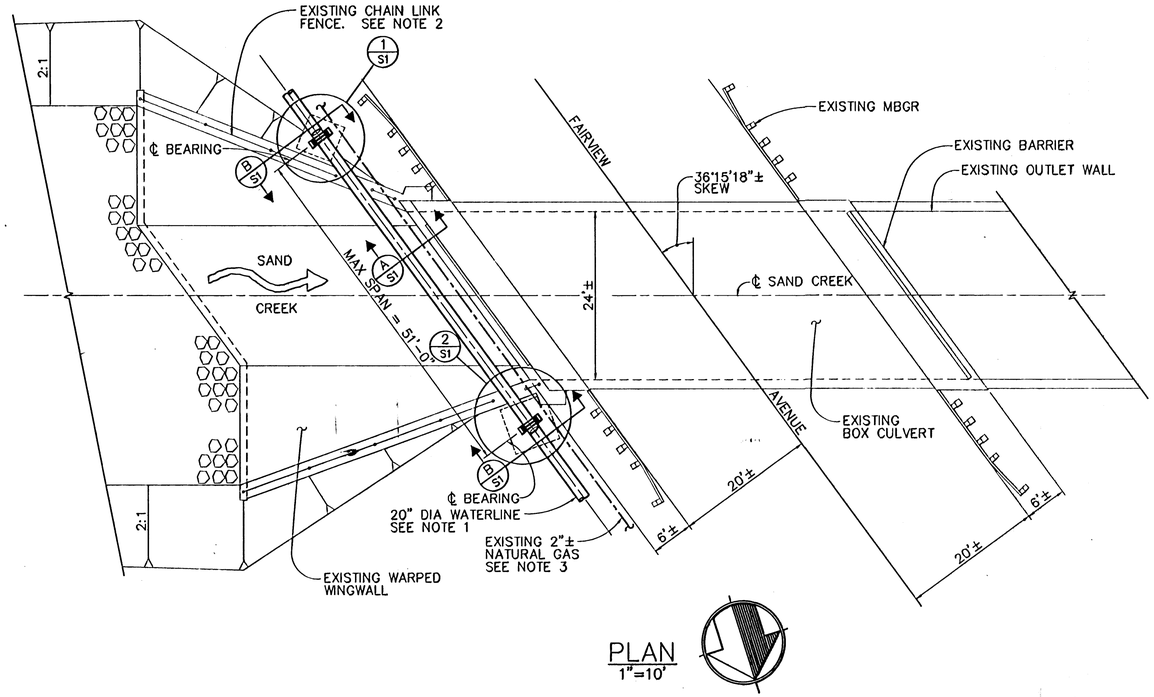

PLAN
1"=10'

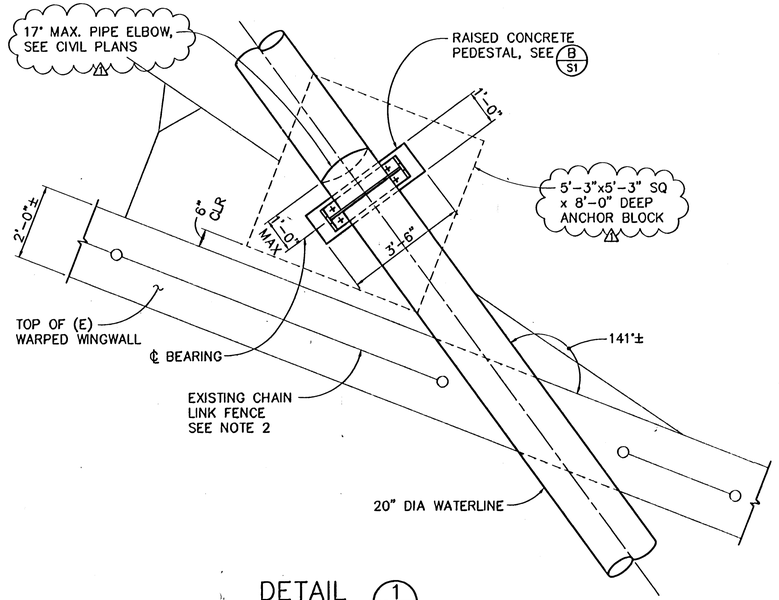

DETAIL 1 S1
1/2" = 1'-0"

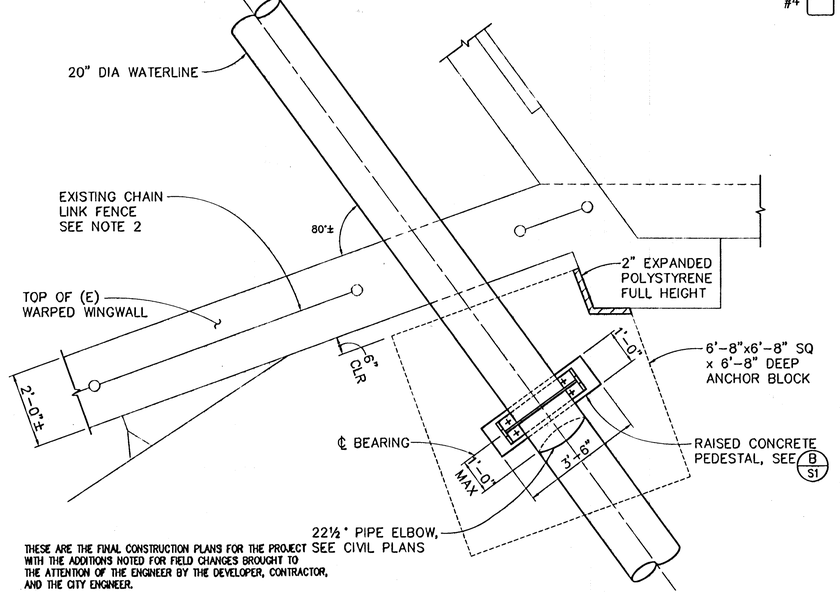

THESE ARE THE FINAL CONSTRUCTION PLANS FOR THE PROJECT WITH THE ADDITIONS NOTED FOR FIELD CHANGES BROUGHT TO THE ATTENTION OF THE ENGINEER BY THE DEVELOPER, CONTRACTOR, AND THE CITY ENGINEER.

TODD M. GOOLKASIAN
GE 3543

8-21-00
DATE

DETAIL 2 S1
1/2" = 1'-0"

NOTES:

1. SEE CIVIL PLANS FOR DESIGN & SPECIFICATIONS FOR WATERLINE INCLUDING PIPE, JOINTS, WELDING, AND HORIZONTAL AND VERTICAL CONTROL OF WATER LINE. MINIMUM PIPE WALL THICKNESS = ¼"
2. ADJUST EXISTING CHAIN LINK FENCE TO ACCOMMODATE WATERLINE.
3. SEE CIVIL PLANS FOR THE LOCATION OF UTILITIES. EXISTING GAS LINE SHALL BE PROTECTED IN PLACE.

STRUCTURAL SPECIFICATIONS

GENERAL
ALL WORK SHALL BE IN ACCORDANCE WITH THE STATE OF CALIFORNIA, DEPARTMENT OF TRANSPORTATION STANDARD SPECIFICATIONS DATED JULY 1992, EXCEPT AS SUPPLEMENTED OR MODIFIED HEREIN.

CONCRETE
ALL CONCRETE SHALL HAVE A MINIMUM 28-DAY COMPRESSIVE STRENGTH OF 3250 PSI.

REINFORCING STEEL
BARS FOR REINFORCING SHALL BE GRADE 60 DEFORMED BARS CONFORMING TO ASTM A615 INCLUDING SUPPLEMENT S1. LAP SPLICES SHALL BE IN ACCORDANCE WITH ACI 318-89 UNLESS NOTED OTHERWISE ON THE PLANS.

STRUCTURAL STEEL AND MISCELLANEUOS IRON
ASTM A-36, IN ACCORDANCE WITH AISC SPECIFICATIONS. ALL STRUCTURAL STEEL AND MISCELLANEUOUS IRON SHALL BE HOT DIP GALVANIZED AFTER FABRICATION. WELDS PERFORMED ON GALVANIZED MATERIAL SHALL BE PAINTED WITH ZINC RICH PAINT.

ANCHOR BOLTS, THREADED RODS
a. BOLTS AND THREADED RODS SHALL CONFORM TO ASTM A-307 GRADE A OR B OR A-36.

WELDING
ALL WELDING SHALL BE PERFORMED BY CERTIFIED WELDERS PER AWS "STANDARD QUALIFICATION PROCEDURE" TO PERFORM THE TYPE OF WORK REQUIRED. ALL WELDING SHALL BE IN ACCORDANCE WITH AWS WELDING CODE. ARC WELDING ELECTRODES SHALL BE E70 SERIES.

SHOP DRAWINGS FOR THE ENGINEERS REVIEW WILL BE REQUIRED AS FOLLOWS:
IN ADDITION TO OTHER SUBMITTAL REQUIREMENTS SPECIFIED IN THE STANDARD SPECIFICATIONS, SHOP DRWAINGS FOR ENGINEER'S REVIEW WILL BE REQUIRED AS FOLLOWS:

1. REINFORCING STEEL
2. CONCRETE MIX DESIGNS
3. STRUCTURAL STEEL AND MISC IRON

FABRICATION SHALL NOT PROCEED UNTIL SHOP DRAWINGS HAVE BEEN APPROVED BY THE ENGINEER.

CONSTRUCTION LIABILITY
CONSTRUCTION CONTRACTOR AGREES THAT IN ACCCORDANCE WITH GENERALLY ACCEPTED CONSTRUCTION PRACTICES, CONSTRUCTION CONTRACTOR WILL BE REQUIRED TO ASSUME SOLE AND COMPLETE RESPONSIBILITY FOR JOB SITE CONDITIONS DURING THE COURSE OF CONSTRUCTION OF THE PROJECT, INCLUDING SAFETY OF ALL PERSONS AND PROPERTY; THAT THIS REQUIREMENT SHALL BE MADE TO APPLY CONTINUOUSLY AND NOT LIMITED TO NORMAL WORKING HOURS, AND CONSTRUCTION CONTRACTOR AGREES TO DEFEND, INDEMNIFY AND HOLD DESIGN PROFESSIONAL HARMLESS FROM ANY AND ALL LIABILITY, REAL OR ALLEGED, IN CONNECTION WITH THE PERFORMANCE OF WORK ON THIS PROJECT, EXCEPTING LIABILITY ARISING FROM THE SOLE NEGLIGENCE OF DESIGN PROFESSIONAL.

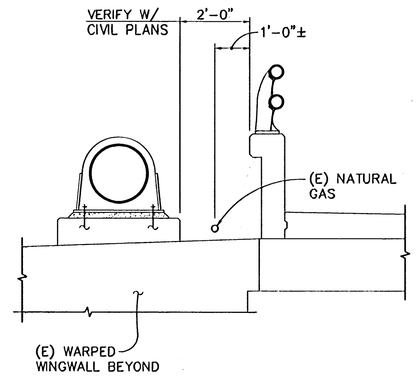

SECTION A S1
1/2" = 1'-0"

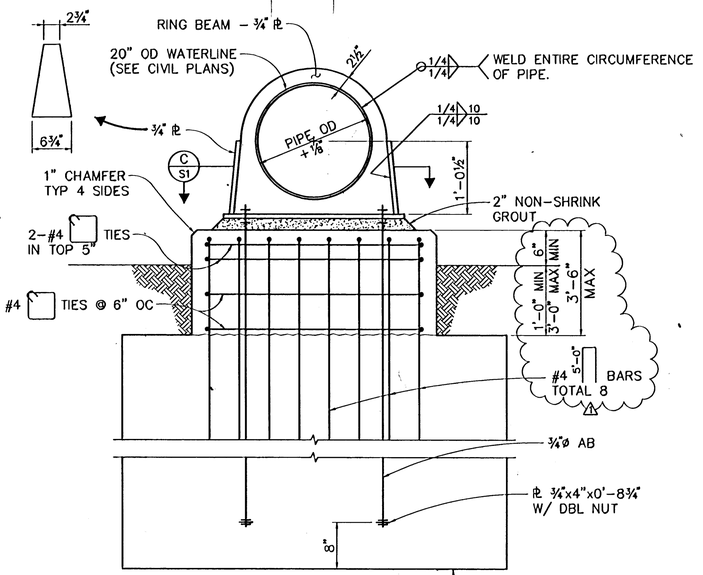

SECTION B S1
1" = 1'-0"

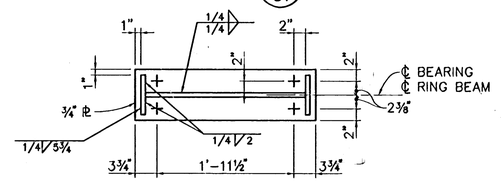

SECTION C S1
1" = 1'-0"

PLAN CHECK SET/NOT FOR CONSTRUCTION (1/13/99)

CIP 98-0720
Improvement Plan
Special Planting Area Plan and Details, Water Line over Sand Creek at Fairview Avenue

BRENTWOOD
ENGINEERING DEPARTMENT
708 THIRD STREET, BRENTWOOD, CA 94513

BIGGS CARDOSA ASSOCIATES INC
STRUCTURAL ENGINEERS
1871 The Alameda, Suite 200
San Jose, California 95126
408-296-5515

BCA

IMPROVEMENT PLAN
CIFP 98-1

PLAN AND DETAILS
20" WATERLINE OVER SAND CREEK AT FAIRVIEW AVE

BRENTWOOD CALIFORNIA

NO.	REVISIONS	BY	APP	DATE
⚠	REVISED 20" W LINE FROM STA 42+00 TO 43+50	TMG		1/6/99
0	RELEASED TO CLIENT	TMG		11/23/98

DESIGNED UNDER THE DIRECTION OF:
TODD M GOOLKASIAN
SE No. 3543
1/13/99
DATE

DESIGN:	S. M. GOLDWASSER	DATE:	11-13-98
DRAWN:	R.L. QUETULIO	DATE:	11-13-98
CHECKED:	T.M. GOOLKASIAN	DATE:	11-13-98

REGISTERED PROFESSIONAL ENGINEER TODD M. GOOLKASIAN No. S3543 Exp. 3-31-01 STRUCTURAL STATE OF CALIFORNIA

SHEET S4
OF 50 SHEETS

6/21/00 AS BUILT (9826691) 98265

CIP 98-0720

94453-30