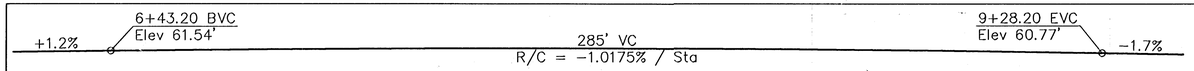

PROFILE GRADE
NO SCALE

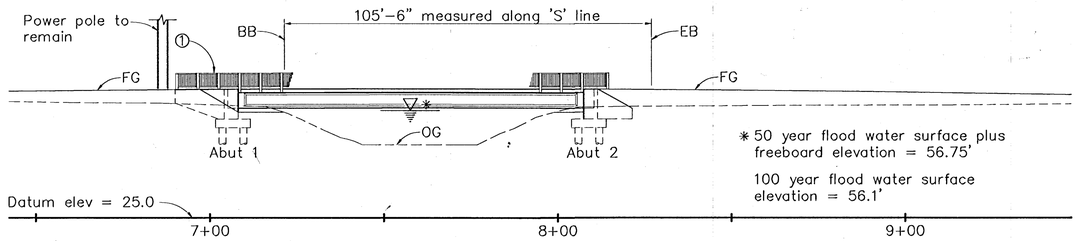

ELEVATION
1" = 20'

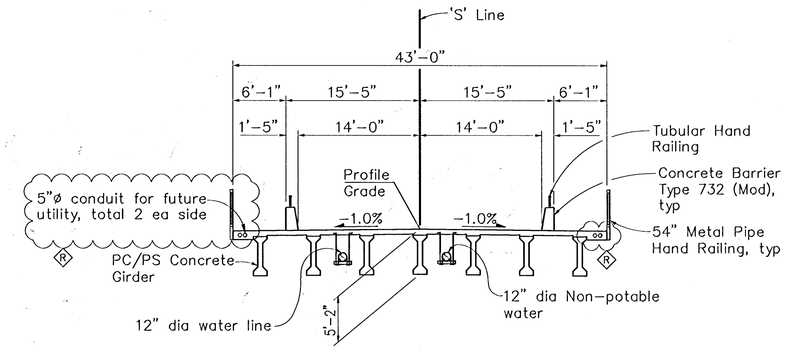

TYPICAL SECTION
1/8" = 1'-0"

PILE DATA TABLE

Location	Pile Type	Design Loading (Service)	Nominal Resistance		Specified Tip Elev
			Compression	Tension	
Abutment 1	24" dia CIDH (80 Tons)	N/A	145 Kip	0	6.0' (3)
Abutment 2	24" dia CIDH (80 Tons)	N/A	145 Kip	0	6.0' (3)

design tip elevation is controlled by the following demands:
(1) Compression; (2) Tension; (3) Lateral loads

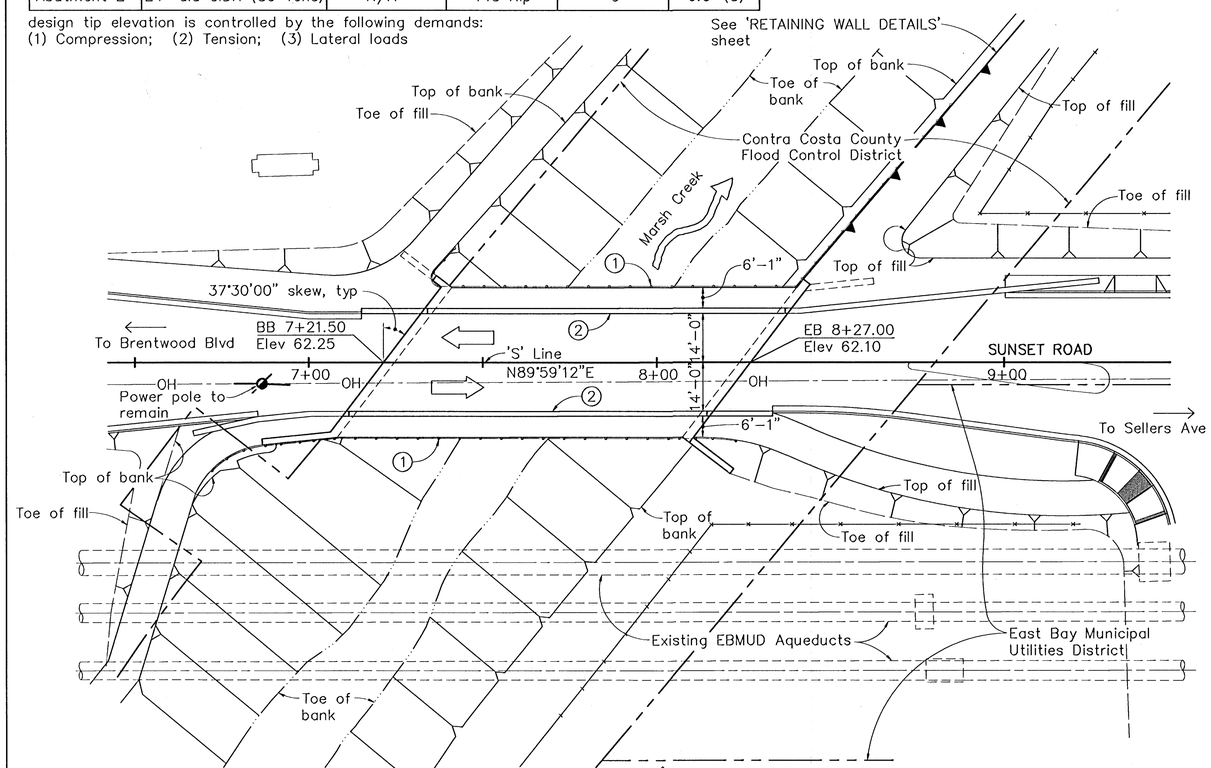

PLAN
1" = 20'

Notes
1. 54" Tubular Handrail
2. Concrete Barrier, Type 732 (Mod)

---OH--- Indicates existing high voltage overhead electrical lines (60kV) to remain

GENERAL NOTES
LOAD FACTOR DESIGN

DESIGN: Bridge Design Specifications (1983 AASHTO with interims and revisions by Caltrans).

SEISMIC DESIGN: Caltrans Seismic Design Criteria (SDC), Version 1.1 July 1999.

DEAD LOAD: Includes 35 psf for future wearing surface.

LIVE LOADING: HS20-44 and alternative and permit design load.

REINFORCED CONCRETE:
fy = 60,000 psi
f'c = 3,500 psi
n = 9
Transverse deck slabs (working stress design)
fs = 20,000 psi
fc = 1200 psi
n = 10

PRECAST / PRESTRESSED CONCRETE: See 'PRESTRESSING NOTES'

SEISMIC LOADING: SDC 1.1 Figure B.8 Curve (Soil Profile Type D, magnitude 7.0±0.25)
Peak Rock Acceleration = 0.50g
with 20% increase for all periods and 10% damping

SITE SPECIFIC ACCELERATION RESPONSE SPECTRA CURVE

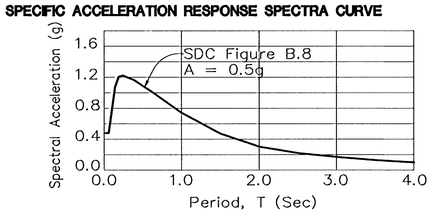

In accordance with the Geotechnical report prepared by Parikh Consultants, dated April 12, 2001 and Supplemental Geotechnical Recommendations dated June 20, 2002. Copies of the Geotechnical report are available for review at the office of the Soils Engineer.

SPECIAL INSPECTION: The Owner shall employ a Special Inspector during construction of all phases of the bridge, as specified in the 'Structural Specifications' and State of California Department of Transportation Standard Specifications dated July 1992.

CALTRANS STANDARD PLANS DATED JULY 1992

A10A	ABBREVIATIONS
A10B	SYMBOLS
A62C	LIMITS OF PAYMENT FOR EXCAVATION AND BACKFILL BRIDGE
B0-1	BRIDGE DETAILS
B0-3	BRIDGE DETAILS
B0-5	BRIDGE DETAILS
B0-13	BRIDGE DETAILS
B3-7	RETAINING WALL-TYPE 5
B3-8	RETAINING WALL-DETAILS No. 1
B6-21	JOINT SEAL (MOVEMENT RATING = 1/2")
B6-10	UTILITY OPENING T BEAM

CALTRANS STANDARD PLANS DATED JULY 1999

B11-51	TUBULAR HAND RAILING
B11-55	CONCRETE BARRIER TYPE 732

INDEX TO BRIDGE PLANS

SHEET NO.	TITLE
S1	GENERAL PLAN
S2	DECK CONTOURS
S3	FOUNDATION PLAN
S4	ABUTMENT LAYOUT
S5	ABUTMENT DETAILS
S6	TYPICAL SECTION
S7	GIRDER LAYOUT
S8	PC/PS CONC GIRDER DETAILS No. 1
S9	PC/PS CONC GIRDER DETAILS No. 2
S10	CONCRETE BARRIER TYPE 732 (Mod)
S11	HANDRAILING DETAILS
S12	RETAINING WALL DETAILS

B7-5 / U42 — Indicates Caltrans Standard Plan sheet number; Indicates detail number
A / S5 — Indicates section number; Indicates sheet number shown on
1 / S5 — Indicates detail number; Indicates sheet number shown on

RECORD DRAWINGS
DATE: 6/2/05
BY: BCA (DHN)

REVIEWED FOR CONFORMANCE WITH CITY OF BRENTWOOD STANDARDS AND REQUIREMENTS. APPROVAL FOR CONSTRUCTION IS SUBJECT TO THE INFORMATION SHOWN HEREIN. CITY OF BRENTWOOD AND THE UNDERSIGNED ARE NOT RESPONSIBLE FOR ANY ERRORS OR OMISSIONS THAT MAY EXIST ON THESE PLANS.

BALWINDER S. GREWAL, CITY ENGINEER — DATE 7/24/02
R.C.E. No. 49122
REGISTRATION EXPIRES 9/30/06

DESIGNED UNDER THE DIRECTION OF:
MICHAEL A. THOMAS — DATE 6/3/05
R.C.E. No. 49793 REGISTRATION EXPIRES 9-30-06

DESIGN:	JPG/DHN	DATE:	6/21/02
DRAWN:	TEH	DATE:	6/21/02
CHECKED:	TLS	DATE:	6/21/02

REGISTERED PROFESSIONAL ENGINEER MICHAEL A. THOMAS No. 49793 Exp. 9/30/06 CIVIL STATE OF CALIFORNIA

NO.	REVISIONS	BY	APP	DATE

BRENTWOOD
ENGINEERING DEPARTMENT
708 THIRD STREET, BRENTWOOD, CA 94513

BIGGS CARDOSA ASSOCIATES INC
STRUCTURAL ENGINEERS
1671 The Alameda, Suite 200
San Jose, California 95126
408-296-5515

BCA

GENERAL PLAN — CIP 336-3012

SUNSET ROAD BRIDGE AT MARSH CREEK

BRENTWOOD — CALIFORNIA

SHEET S-1 OF 12 SHEETS

(2000193S1) 2000193

CIP 102-0724
Improvement
Coversheet Sunset (as-built)

CIP 102-0724

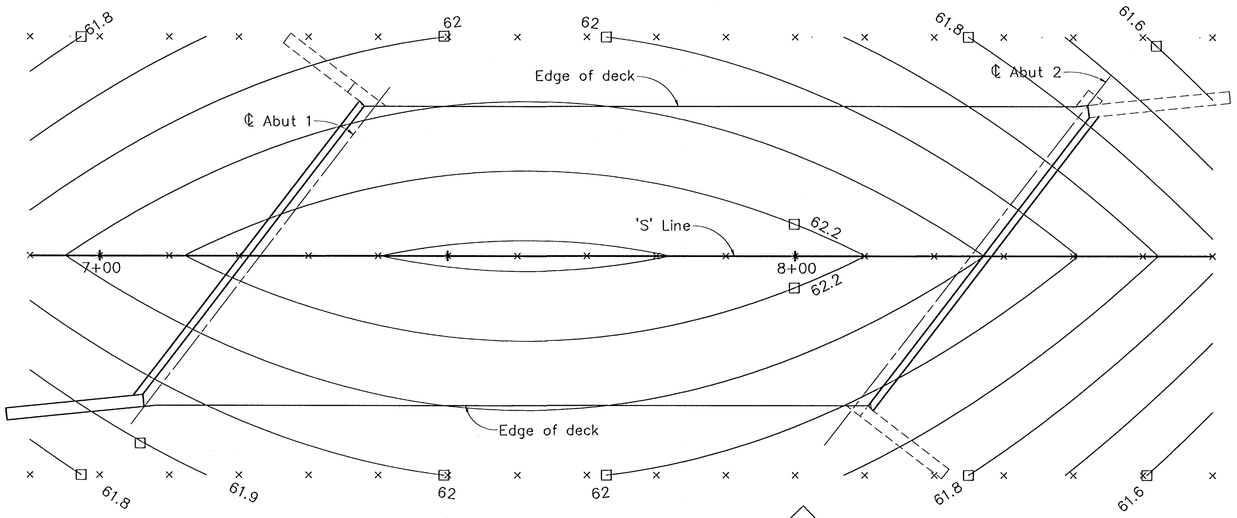

Note:
Revised deck contours
1

DECK CONTOURS
1" = 10'

Notes:

1. Contours indicate top of deck elevation.
2. × Indicates 10' intervals measured along 'S' line.
3. Contour interval = 0.10'
4. Contours do not include camber. See 'PC/PS CONCRETE GIRDER DETAILS No. 1' for camber values.
5. Top of wingwall elevation varies.

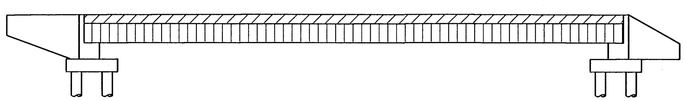

PC P/S Concrete Girder (f'c=6000 PSI @ 28 days)

Structural Concrete, Bridge (f'c=3500 PSI @ 28 days)

Structural Concrete, Bridge (f'c=5000 PSI @ 28 days)

Note: Concrete shall have the minimum compressive strength shown above and shall be considered to be designated by compressive strength

CONCRETE STRENGTH AND TYPE LIMITS
NO SCALE

RECORD DRAWINGS
DATE: 6/2/05
BY: BCA (DHN) NO CHANGE

CIP 102-0724
Improvement
Deck Contours (as-built)

BRENTWOOD
CITY OF
ENGINEERING DEPARTMENT
708 THIRD STREET, BRENTWOOD, CA 94513

BIGGS CARDOSA ASSOCIATES INC
STRUCTURAL ENGINEERS
1871 The Alameda, Suite 200
San Jose, California 95126
408-296-5515

BCA

DECK CONTOURS
CIP 336-3012

SUNSET ROAD BRIDGE AT MARSH CREEK

BRENTWOOD CALIFORNIA

NO.	REVISIONS	BY	APP	DATE
1	Revised deck contours			

DESIGNED UNDER THE DIRECTION OF:
MICHAEL A. THOMAS 6/3/05 DATE
R.C.E. No. 49793 REGISTRATION EXPIRES 9-30-06

DESIGN:	JPG/DHN	DATE:	6/21/02
DRAWN:	SMH	DATE:	6/21/02
CHECKED:	TLS	DATE:	6/21/02

REGISTERED PROFESSIONAL ENGINEER MICHAEL A. THOMAS No. 49793 Exp. 9/30/06 CIVIL STATE OF CALIFORNIA

SHEET S-2 OF 12 SHEETS

(2000193S2) 2000193

CIP 102-0724

BENCH MARK AND DATUM

Monument	Elev	Description/Location	Northing	Easting
BM #3852 USC & GS	66.140	SW corner Hwy 4 bridge at Marsh Creek Brass disc on conc railing	531,200	1,655,400

Legend:

- —— OH —— Indicates exist high voltage overhead electric lines (60 kv) to remain
- —— SD —— Indicates existing storm drain. Verify with Road Plans
- —— W —— Indicates 12" water line to be relocated, see Road Plans
- —— RW —— Indicates 12" reclaimed water line, see Road Plans

Notes:

1. 51.0 Indicates bottom of footing elevation
2. + Indicates spot elevation
3. ◌ Indicates vertical pile, not all piles shown
4. Utilities shown are for illustrative purposes only for details, see Road Plans. Contractor to verify locations prior to begin construction
5. The contractor shall maintain a minimum 10' horizontal clearance from each side of the existing PG&E OH Line during CIDH pile construction

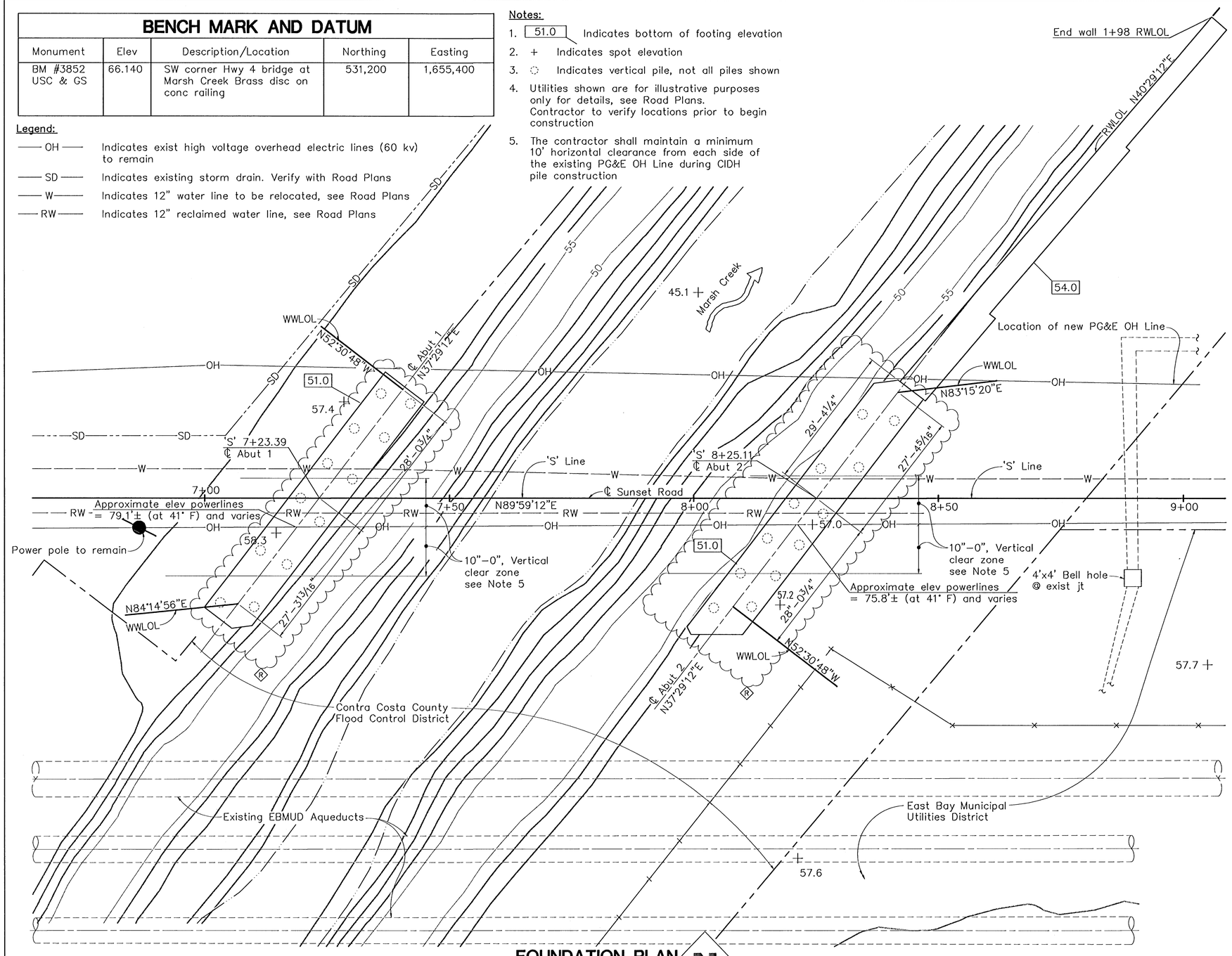

FOUNDATION PLAN
1" = 10'

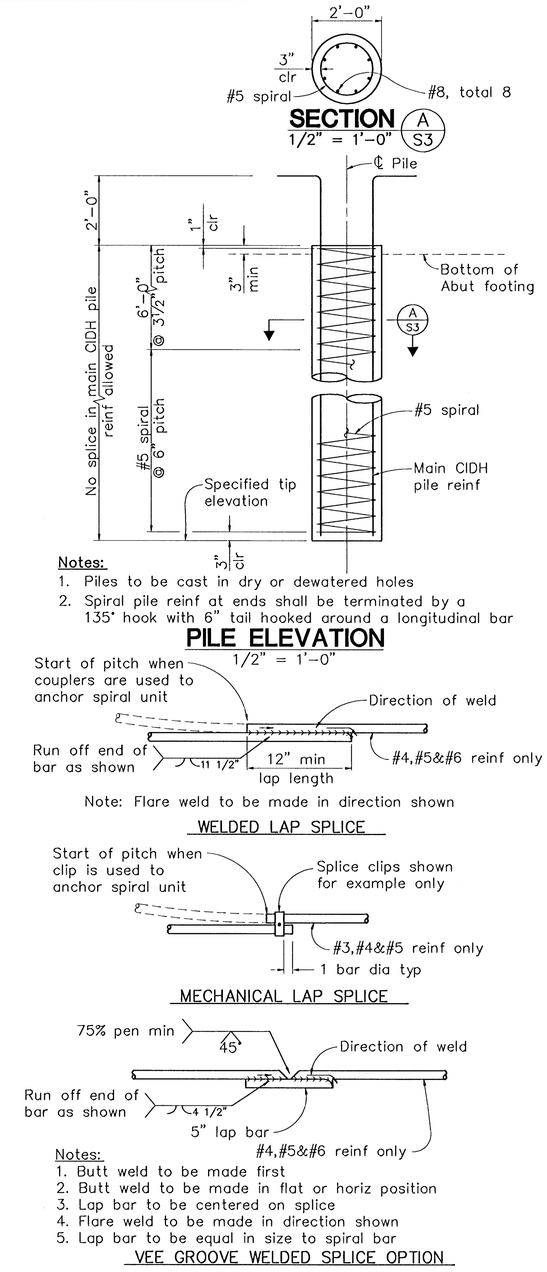

BAR SPIRAL SPLICE AND ANCHOR DETAIL
NO SCALE

RECORD DRAWINGS
DATE: 6/2/05
BY: BCA (DHN)

CIP 102-0724
Improvement
Foundation (as-built)

BRENTWOOD
ENGINEERING DEPARTMENT
708 THIRD STREET, BRENTWOOD, CA 94513

BIGGS CARDOSA ASSOCIATES INC
STRUCTURAL ENGINEERS
1871 The Alameda, Suite 200
San Jose, California 95126
408-296-5515

BCA

FOUNDATION PLAN — CIP 336-3012

SUNSET ROAD BRIDGE AT MARSH CREEK

BRENTWOOD — CALIFORNIA

NO.	REVISIONS	BY	APP	DATE

DESIGNED UNDER THE DIRECTION OF:
MICHAEL A. THOMAS
R.C.E. No. 49793 REGISTRATION EXPIRES 9-30-08
6/3/05 DATE

DESIGN:	JPG/DHN	DATE:	6/21/02
DRAWN:	TEH	DATE:	6/21/02
CHECKED:	TLS	DATE:	6/21/02

REGISTERED PROFESSIONAL ENGINEER MICHAEL A. THOMAS No. 49793 Exp. 9/30/08 CIVIL STATE OF CALIFORNIA

SHEET S-3 OF 12 SHEETS

(2000193S3) 2000193

CIP 102-0724

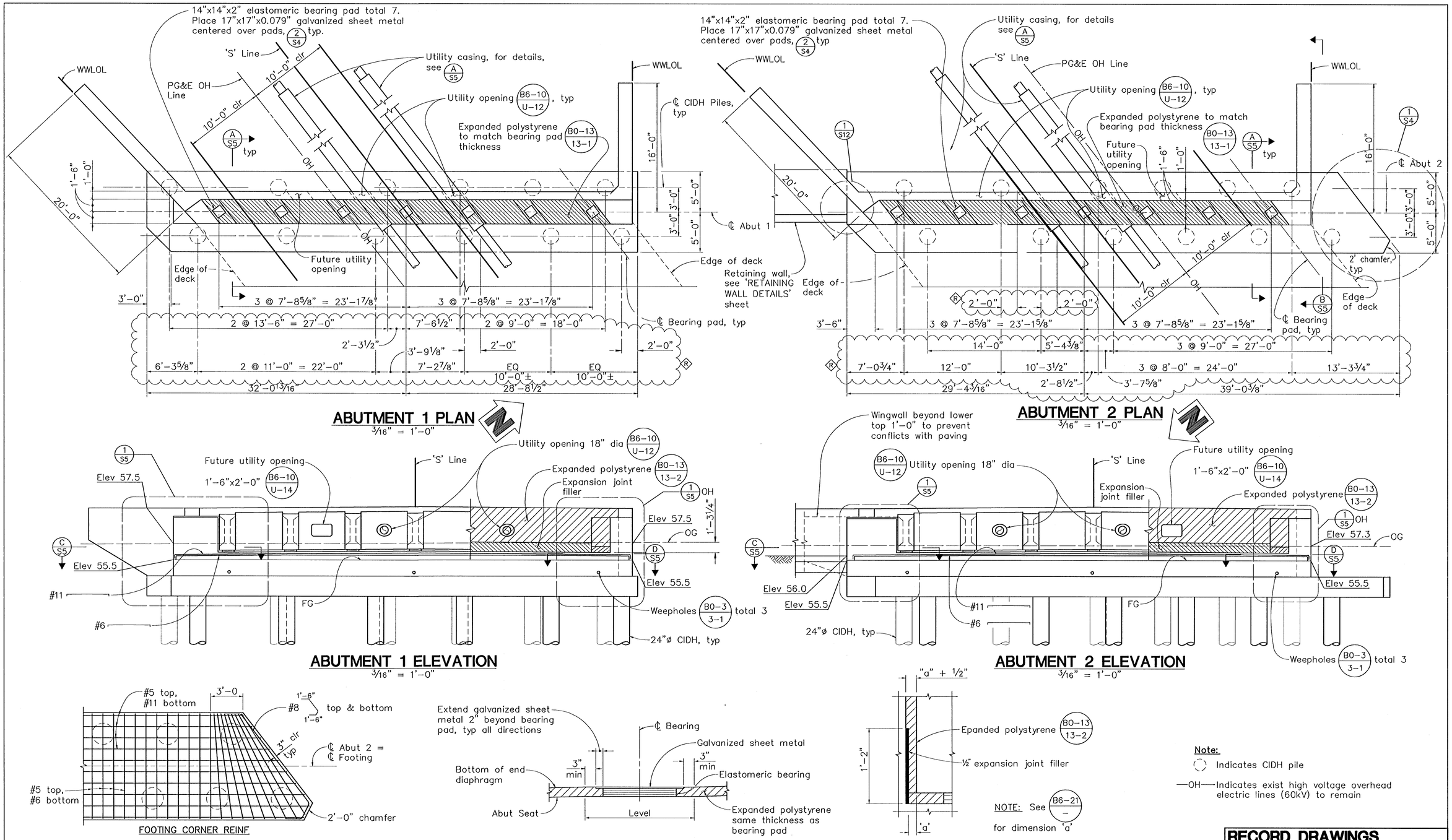

RECORD DRAWINGS
DATE: 6/2/05
BY: BCA (DHN)

CIP 102-0724
Improvement
Abutment (as-built) (1)

BRENTWOOD
ENGINEERING DEPARTMENT
708 THIRD STREET, BRENTWOOD, CA 94513

BIGGS CARDOSA ASSOCIATES INC
STRUCTURAL ENGINEERS
1871 The Alameda, Suite 200
San Jose, California 95126
408-296-5515

BCA

ABUTMENT LAYOUT — CIP 336-3012

SUNSET ROAD BRIDGE AT MARSH CREEK

BRENTWOOD — CALIFORNIA

NO.	REVISIONS	BY	APP	DATE

DESIGNED UNDER THE DIRECTION OF:
MICHAEL A. THOMAS — DATE 6/3/05
R.C.E. No. 49793 REGISTRATION EXPIRES 9-30-06

DESIGN:	JPG/DHN	DATE:	6/21/02
DRAWN:	REM	DATE:	6/21/02
CHECKED:	TLS	DATE:	6/21/02

REGISTERED PROFESSIONAL ENGINEER MICHAEL A. THOMAS No. 49793 Exp. 9/30/06 CIVIL STATE OF CALIFORNIA

SHEET S-4 OF 12 SHEETS

(2000193S4) 2000193

CIP 102-0724

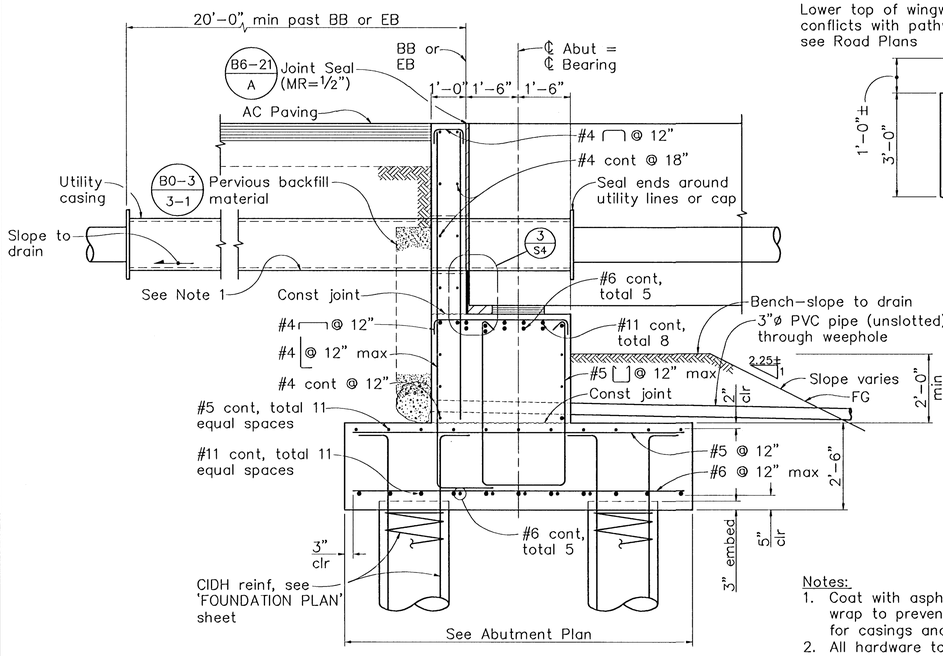

SECTION A / S5
1/2" = 1'-0"

Notes:
1. Coat with asphalt and wrap to prevent corrosion for casings and water pipes
2. All hardware to be galvanized

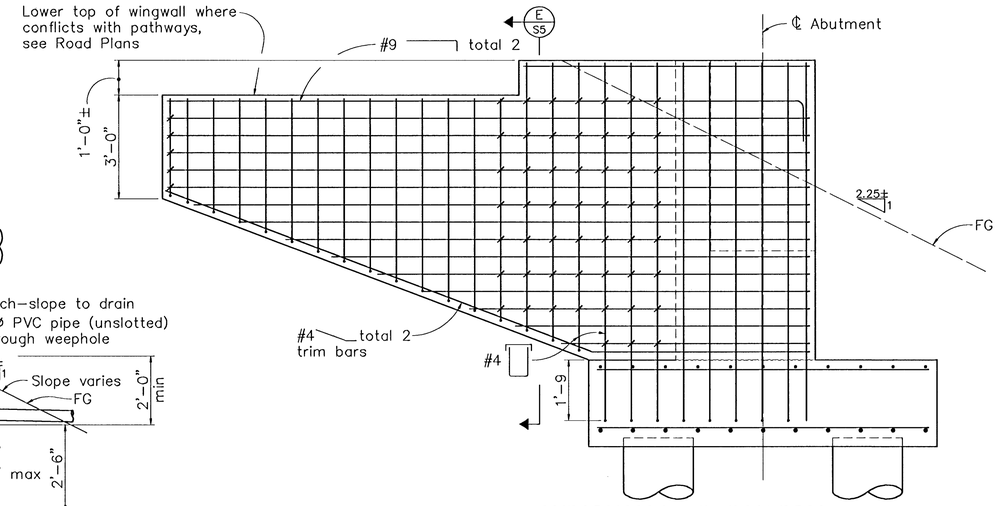

WINGWALL ELEVATION
1/2" = 1'-0"

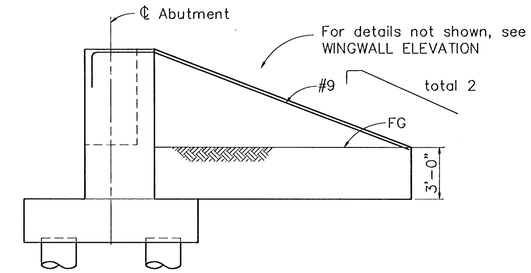

Note:
Occurs at Abut 2 right side only.

WINGWALL ELEVATION B / S5
1/4" = 1'-0"

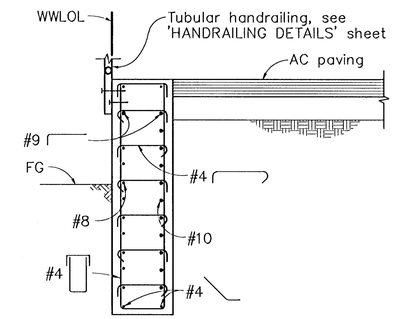

SECTION E / S5
1/2" = 1'-0"

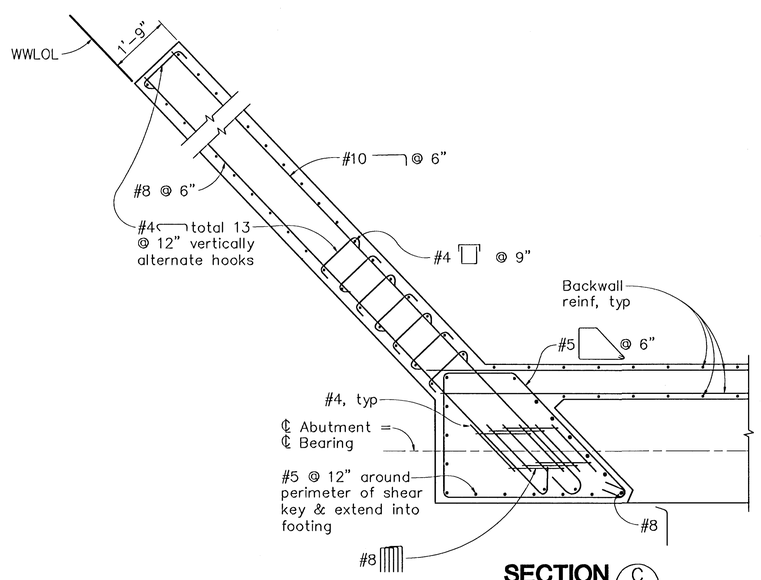

SECTION C / S5
1/2" = 1'-0"

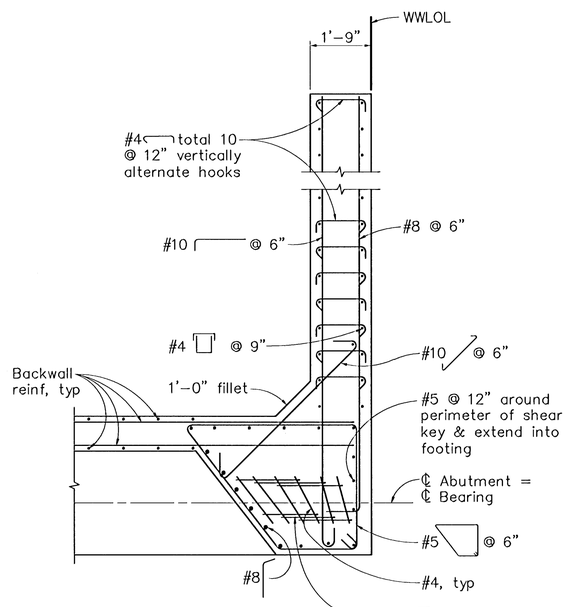

SECTION D / S5
1/2" = 1'-0"

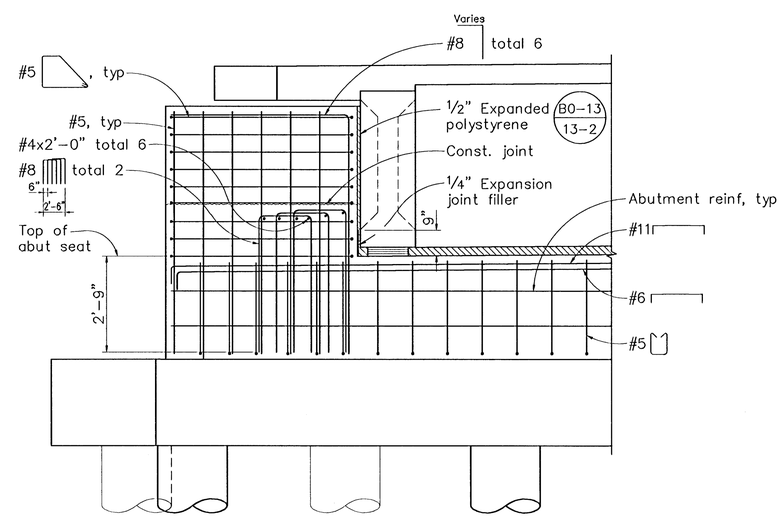

DETAIL 1 / S5
1/2" = 1'-0"

RECORD DRAWINGS
DATE: 6/2/05
BY: BCA (DHN) NO CHANGE

CIP 102-0724
Improvement
Abutment (as-built) (2)

BRENTWOOD
ENGINEERING DEPARTMENT
708 THIRD STREET, BRENTWOOD, CA 94513

BIGGS CARDOSA ASSOCIATES INC
STRUCTURAL ENGINEERS
1871 The Alameda, Suite 200
San Jose, California 95126
408-296-5515

BCA

ABUTMENT DETAILS
CIP 336-3012

SUNSET ROAD BRIDGE AT MARSH CREEK

BRENTWOOD CALIFORNIA

NO.	REVISIONS	BY	APP	DATE

DESIGNED UNDER THE DIRECTION OF:
MICHAEL A. THOMAS
R.C.E. No. 49793 REGISTRATION EXPIRES 9-30-08
6/3/05 DATE

DESIGN:	JPG/DHN	DATE:	6/21/02
DRAWN:	REM	DATE:	6/21/02
CHECKED:	TLS	DATE:	6/21/02

REGISTERED PROFESSIONAL ENGINEER MICHAEL A. THOMAS No. 49793 Exp. 9/30/08 CIVIL STATE OF CALIFORNIA

SHEET S-5 OF 12 SHEETS

(2000193S5) 2000193

CIP 102-0724

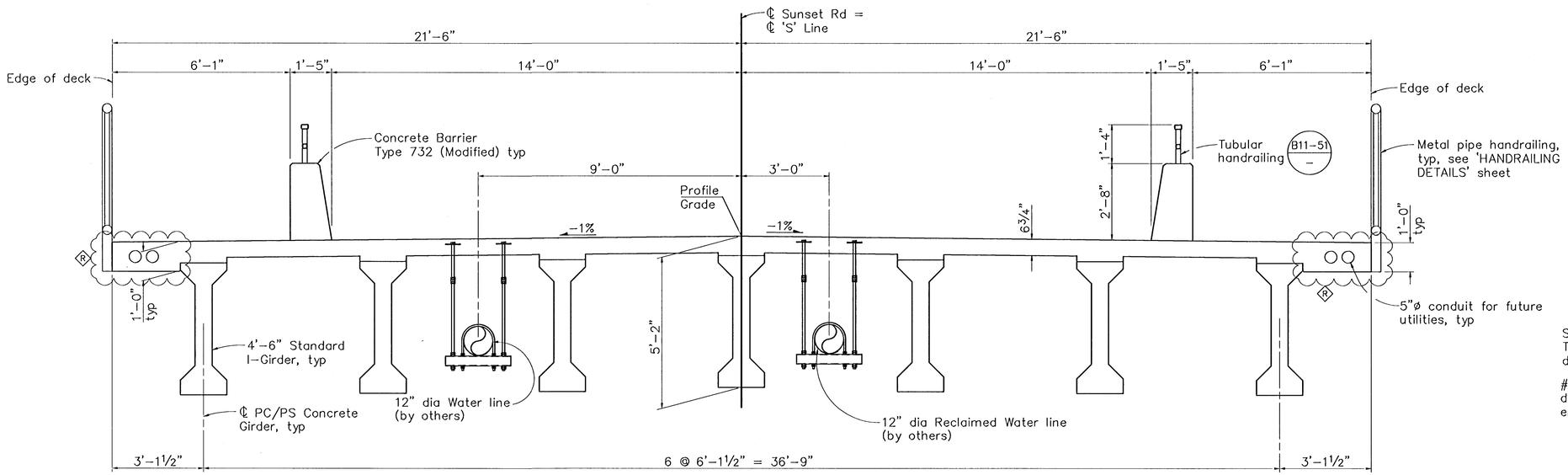

TYPICAL SECTION
½" = 1'-0"

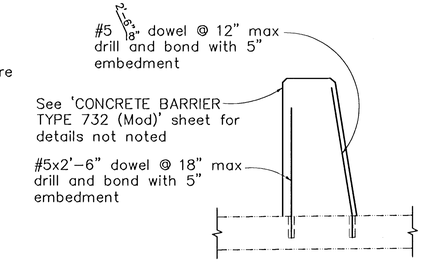

DETAIL 1/S6
¾" = 1'-0"

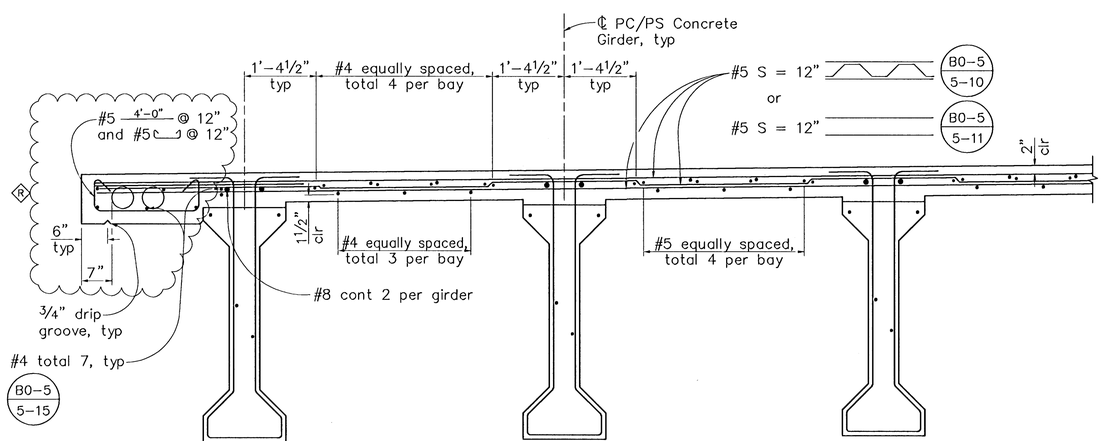

PARTIAL TYPICAL SECTION B0-5 / –
¾" = 1'-0"

Notes:
1. All dimensions measured normal to 'S' Line
2. Tranverse deck and soffit reinf shall be placed perpendicular to 'S' Line and spaced along 'S' Line

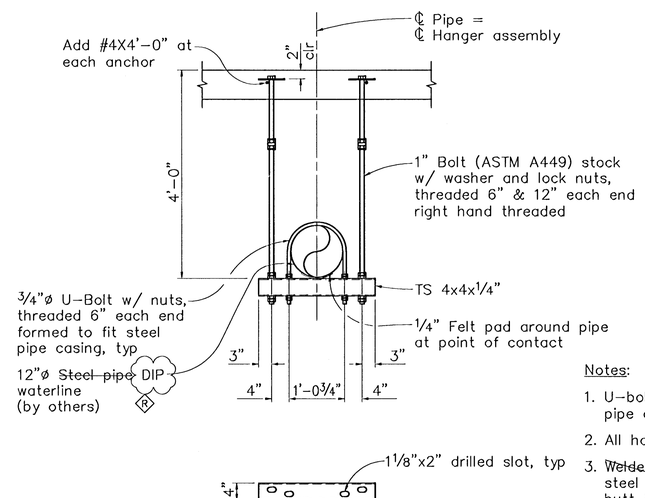

Notes:
1. U-bolts to provide ⅛" clearance all around between pipe and U-bolt.
2. All hardware to be galvanized.
3. ~~Welded circumferential splices in steel pipe casing and steel pipe waterline shall be type square groove weld butt joint prequalified details of welded joints for partial joint penetration groove welds details and welding requirement of AWS D1.1. Welding shall be performed with filler metal conforming to AWS D1.5 for ASTM grade A36 steel.~~
4. Space pipe hanger assembly at 12'-0" max o.c.

Note:
DIP was used
(R)

PIPE HANGER ASSEMBLY 1/S6
3/4" = 1'-0"

RECORD DRAWINGS
(R) DATE: 6/2/05
BY: BCA (DHN)

CIP 102-0724
Improvement
Section Details (as-built)

BRENTWOOD
ENGINEERING DEPARTMENT
708 THIRD STREET, BRENTWOOD, CA 94513

BIGGS CARDOSA ASSOCIATES INC
STRUCTURAL ENGINEERS
1871 The Alameda, Suite 200
San Jose, California 95126
408-296-5515

BCA

TYPICAL SECTION
CIP 336-3012
SUNSET ROAD BRIDGE AT MARSH CREEK
BRENTWOOD CALIFORNIA

NO.	REVISIONS	BY	APP	DATE

DESIGNED UNDER THE DIRECTION OF:
MICHAEL A. THOMAS
R.C.E. No. 49793 REGISTRATION EXPIRES 9-30-06
6/3/05 DATE

DESIGN:	JPG/DHN	DATE:	6/21/02
DRAWN:	REM	DATE:	6/21/02
CHECKED:	TLS	DATE:	6/21/02

REGISTERED PROFESSIONAL ENGINEER MICHAEL A. THOMAS No. 49793 Exp. 9/30/06 CIVIL STATE OF CALIFORNIA

SHEET S-6 OF 12 SHEETS
(2000193S6) 2000193

CIP 102-0724

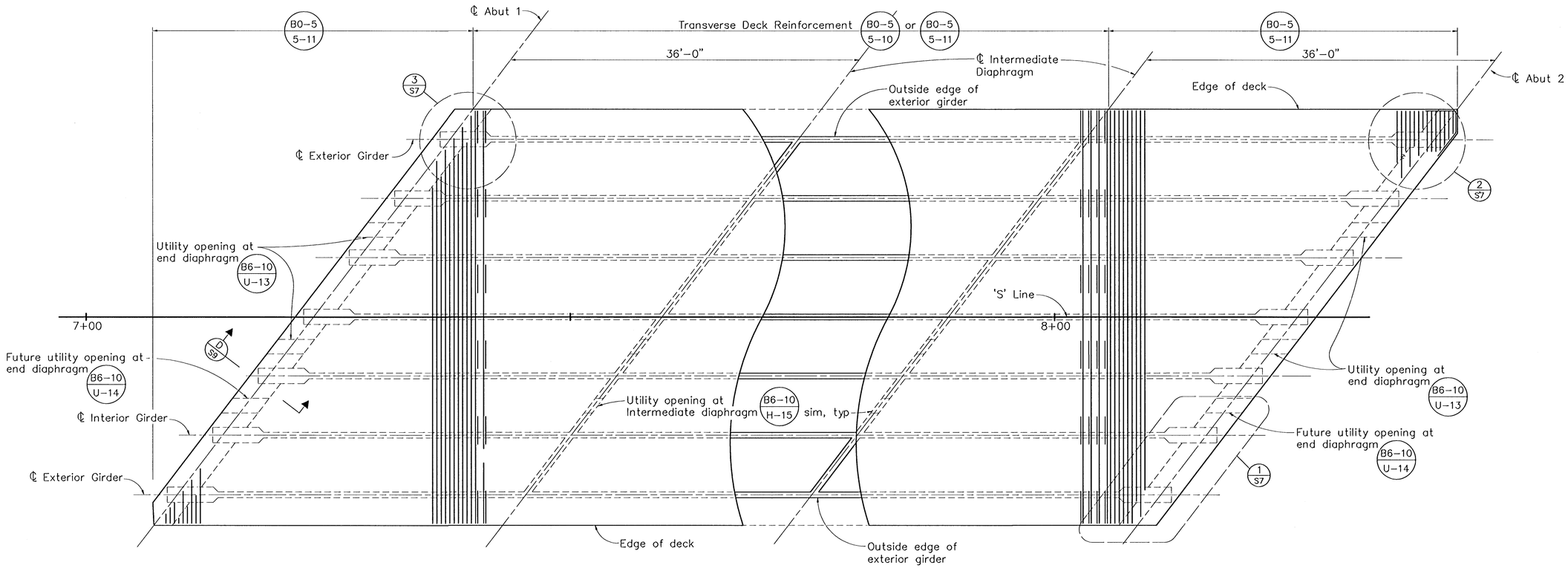

GIRDER LAYOUT

3/16" = 1'-0

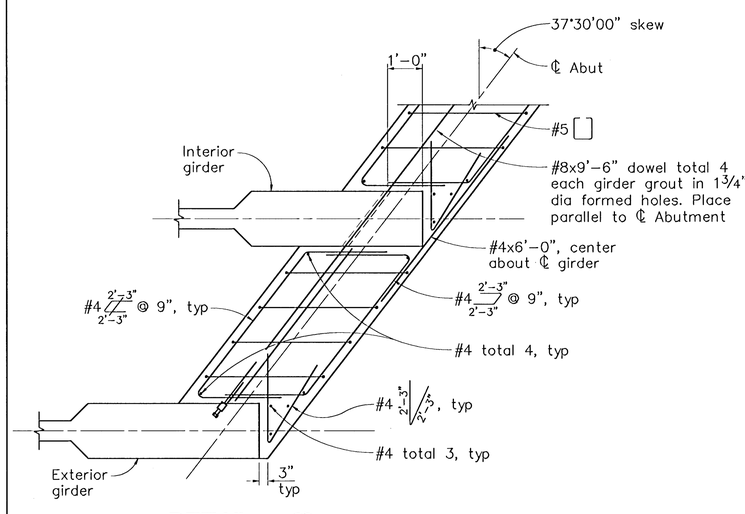

DETAIL 1/S7

1/2" = 1'-0"

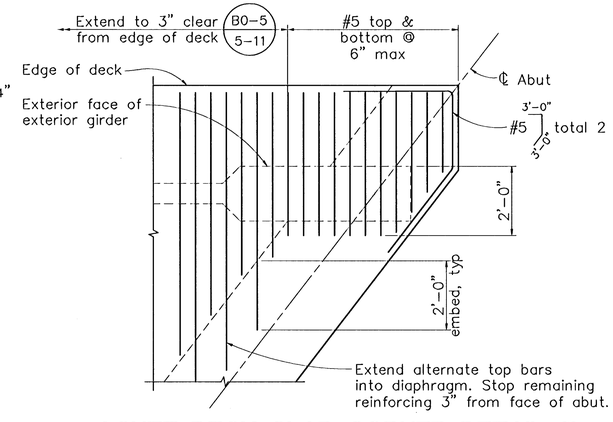

ACUTE DECK SLAB CORNER DETAIL 2/S7

1/2" = 1'-0"

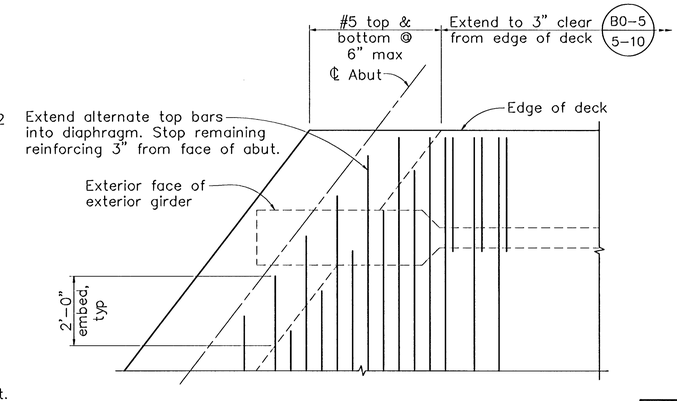

OBTUSE DECK SLAB CORNER DETAIL 3/S7

1/2" = 1'-0"

RECORD DRAWINGS
DATE: 6/2/05
BY: BCA (DHN) NO CHANGE

CIP 102-0724
Improvement
Girder (as-built) (1)

BRENTWOOD
ENGINEERING DEPARTMENT
708 THIRD STREET, BRENTWOOD, CA 94513

BIGGS CARDOSA ASSOCIATES INC
STRUCTURAL ENGINEERS
1871 The Alameda, Suite 200
San Jose, California 95126
408-296-5515

BCA

GIRDER LAYOUT
CIP 336-3012

SUNSET ROAD BRIDGE AT MARSH CREEK

BRENTWOOD CALIFORNIA

NO.	REVISIONS	BY	APP	DATE

DESIGNED UNDER THE DIRECTION OF:
MICHAEL A. THOMAS
R.C.E. No. 49793 REGISTRATION EXPIRES 9-30-06
6/3/05 DATE

DESIGN:	JPG/DHN	DATE: 6/21/02
DRAWN:	AR	DATE: 6/21/02
CHECKED:	TLS	DATE: 6/21/02

REGISTERED PROFESSIONAL ENGINEER MICHAEL A. THOMAS No. 49793 Exp. 9/30/06 CIVIL STATE OF CALIFORNIA

SHEET S-7 OF 12 SHEETS

(2000193S7) 2000193

CIP 102-0724

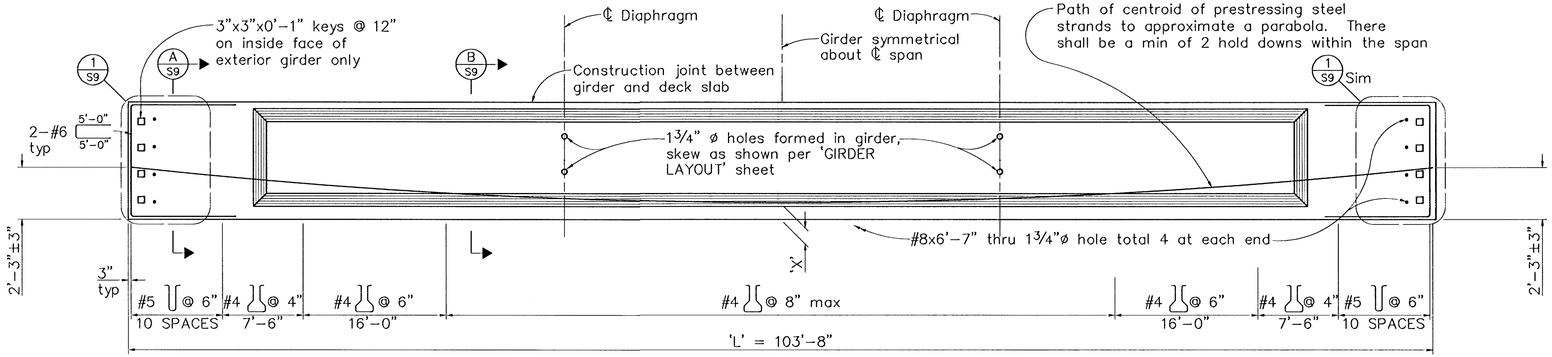

INTERIOR GIRDER ELEVATION

NO SCALE

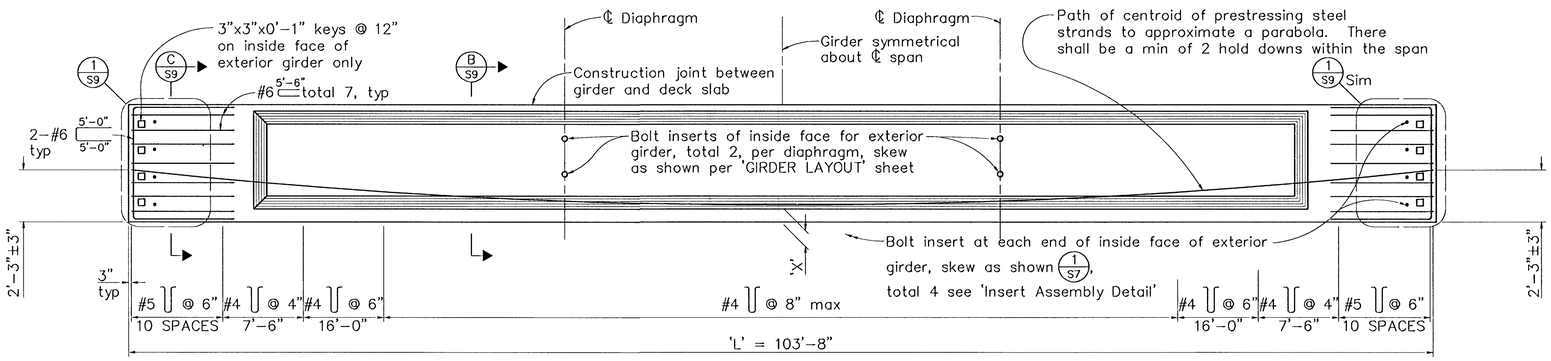

EXTERIOR GIRDER ELEVATION

NO SCALE

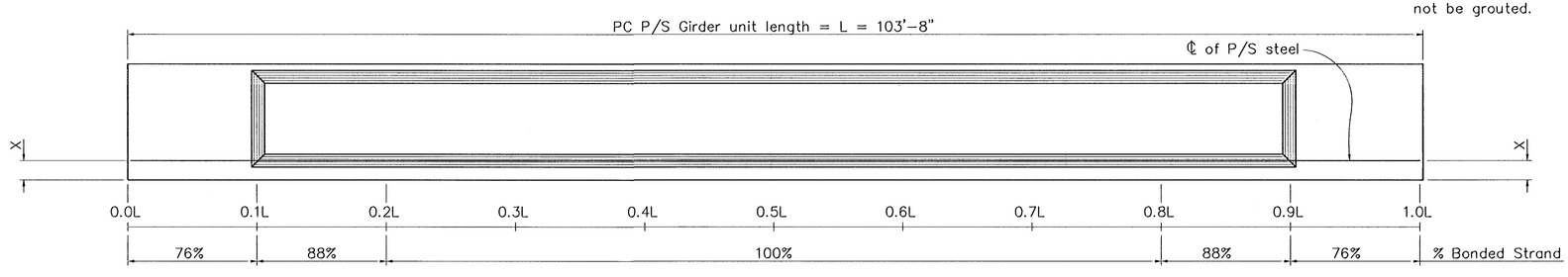

ALTERNATIVE DESIGN - BONDED PRETENSION STRAND DIAGRAM

NO SCALE

PRESTRESSING NOTES

1. Design based on 270 ksi low relaxation ½"ø strand
2. Working force: the force required at center of span after all losses
3. Number of strands = $\frac{P}{As[(0.75x270)-35]}$
4. Concrete strength: f'ci is at time of initial stressing; f'c is at 28 days, psi
5. Girder designed for Pretensioning
6. Total number of Precast Girders : 5 Interior Girders, 2 Exterior Girders

Girder location or designation and length	P = working force in kips		Concrete strength		Girder camber at ℄ span (in)	
	'X'		f'ci (psi)	f'c (psi)	*△(P/S+ DL Girder)	**△ Final
Interior	4½"	820	5,000	6,000	-4.1	4.75
Exterior	4½"	820	5,000	6,000	-4.1	4.75

* Expected upward deflection from original profile grade

** Expected top of deck elevation above profile grade (at time of constructing deck slab)

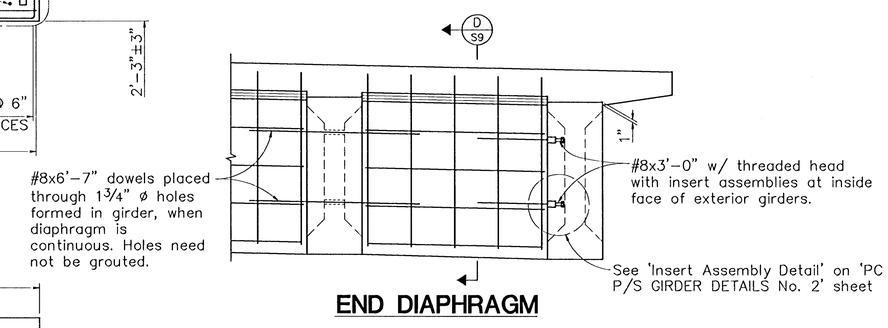

END DIAPHRAGM

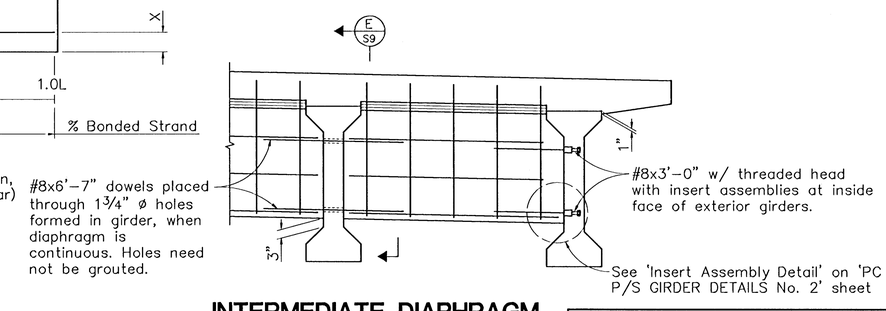

(Interior Girder shown, Exterior Girder similar)

INTERMEDIATE DIAPHRAGM

RECORD DRAWINGS
DATE: 6/2/05
BY: BCA (DHN) NO CHANGE

CIP 102-0724
Improvement
Girder (as-built) (2)

BRENTWOOD
ENGINEERING DEPARTMENT
708 THIRD STREET, BRENTWOOD, CA 94513

BIGGS CARDOSA ASSOCIATES INC
STRUCTURAL ENGINEERS
1871 The Alameda, Suite 200
San Jose, California 95126
408-296-5515

BCA

PC/PS CONC GIRDER DETAILS No. 1 — CIP 336-3012

SUNSET ROAD BRIDGE AT MARSH CREEK

BRENTWOOD — CALIFORNIA

NO.	REVISIONS	BY	APP	DATE

DESIGNED UNDER THE DIRECTION OF:
MICHAEL A. THOMAS — DATE 6/3/05
R.C.E. No. 49793 REGISTRATION EXPIRES 9-30-06

DESIGN:	JPG/DHN	DATE:	6/25/02
DRAWN:	AR	DATE:	6/25/02
CHECKED:	TLS	DATE:	6/25/02

REGISTERED PROFESSIONAL ENGINEER MICHAEL A. THOMAS No. 49793 Exp. 9/30/06 CIVIL STATE OF CALIFORNIA

SHEET S-8 OF 12 SHEETS

2000193S8 2000193

CIP 102-0724

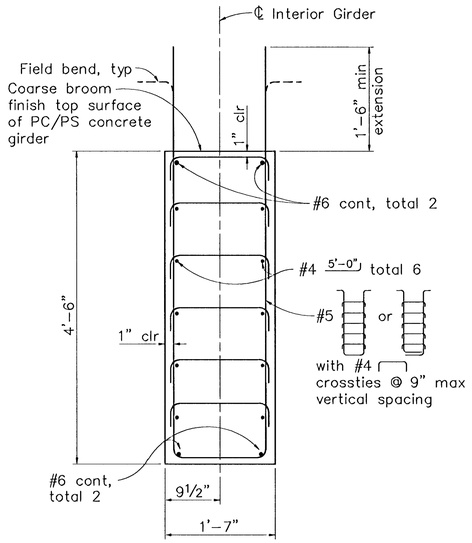

INTERIOR GIRDER

(AT ANCHORAGE)

SECTION A / S9
1" = 1'-0"

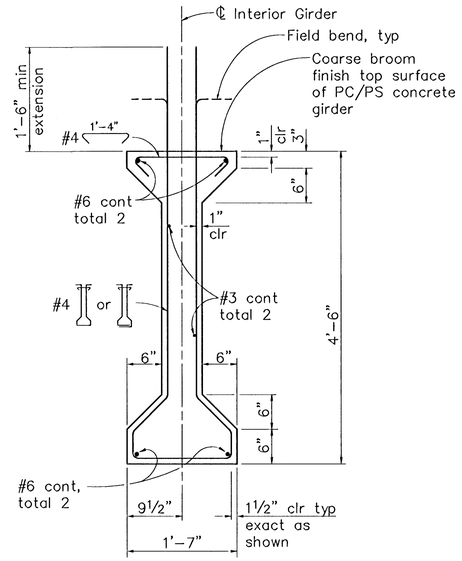

(AT MIDSPAN)

SECTION B / S9
1" = 1'-0"

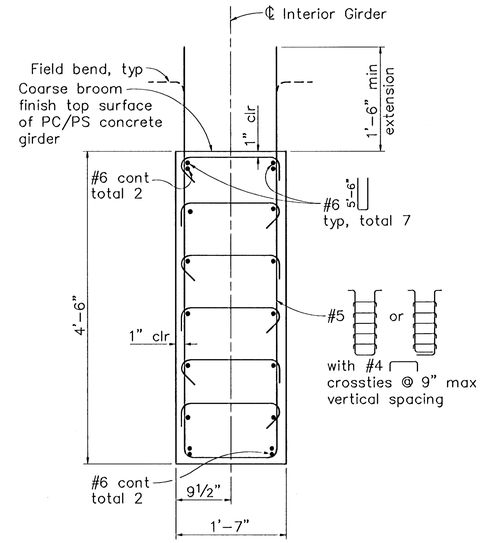

EXTERIOR GIRDER

(AT ANCHORAGE)

SECTION C / S9
1" = 1'-0"

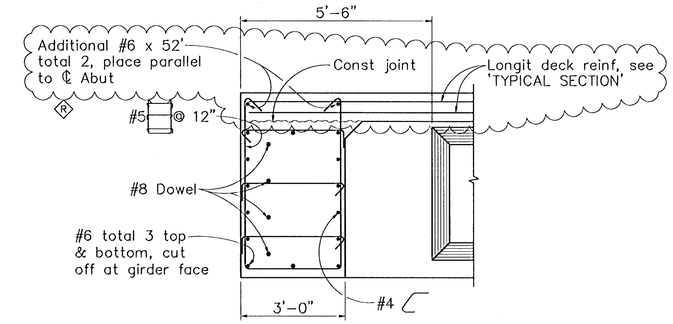

SECTION D / S9
½" = 1'-0"

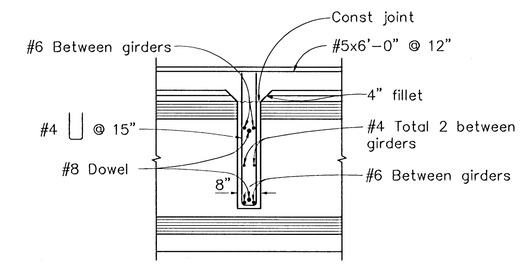

SECTION E / S9
½" = 1'-0"

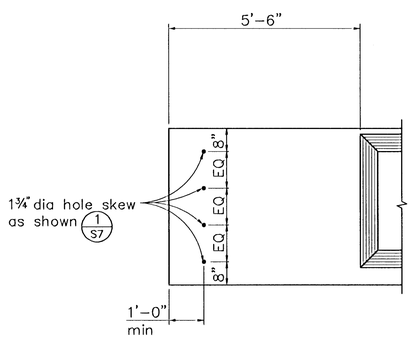

ABUTMENT END DETAIL 1 / S9
½" = 1'-0"

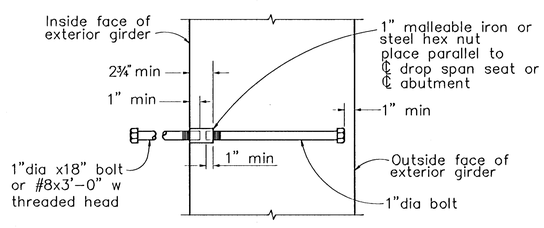

INSERT ASSEMBLY DETAIL 2 / S9
1 1/2" = 1'-0"

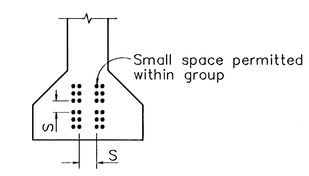

1. Strands may be bundled in groups consisting of 3 vertically 2 horizontally, and separated at the ends.
2. The min distance "S" between groups or individual strands is 1½" for ⅜" strands, 1¾" for 7/16" strands and 2" for ½" strands.
3. "S" is measured between centers of adjacent strands.
4. Approval of Engineer is required for deviation.

CLEARANCES FOR PRETENSIONED STRANDS
NO SCALE

RECORD DRAWINGS
DATE: 6/2/05
BY: BCA (DHN)

CIP 102-0724
Improvement
Girder (as-built) (3)

BRENTWOOD
ENGINEERING DEPARTMENT
708 THIRD STREET, BRENTWOOD, CA 94513

BIGGS CARDOSA ASSOCIATES INC
STRUCTURAL ENGINEERS
1871 The Alameda, Suite 200
San Jose, California 95126
408-296-5515

BCA

PC/PS CONC GIRDER DETAILS No. 2 — CIP 336-3012

SUNSET ROAD BRIDGE AT MARSH CREEK

BRENTWOOD — CALIFORNIA

NO.	REVISIONS	BY	APP	DATE

DESIGNED UNDER THE DIRECTION OF:
MICHAEL A. THOMAS — DATE 6/3/05
R.C.E. No. 49793 REGISTRATION EXPIRES 9-30-06

DESIGN:	JPG/DHN	DATE:	6/25/02
DRAWN:	AR	DATE:	6/25/02
CHECKED:	TLS	DATE:	6/25/02

REGISTERED PROFESSIONAL ENGINEER MICHAEL A. THOMAS No. 49793 Exp. 9/30/06 CIVIL STATE OF CALIFORNIA

SHEET S-9 OF 12 SHEETS

(2000193S9) 2000193

CIP 102-0724

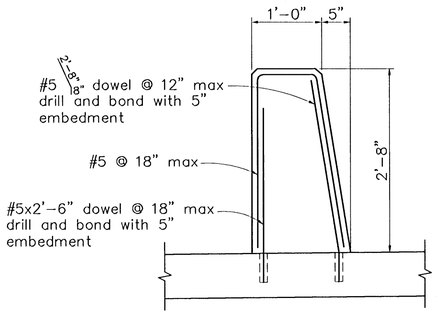

TYPE 732 (Mod)
1" = 1'-0"

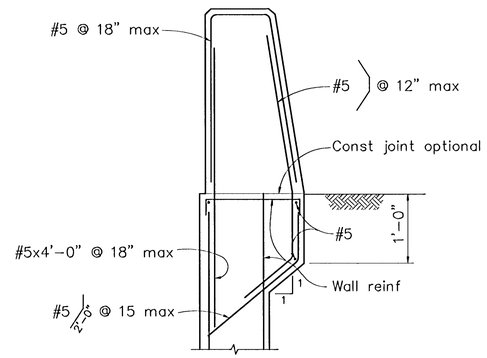

TYPE 732A
1" = 1'-0"

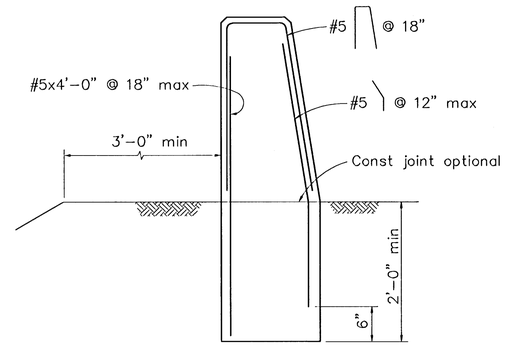

TYPE 732B
1" = 1'-0"

* For reinf and details not shown, see Caltrans Standard Plans dated July 1999 (B11-55 / –)

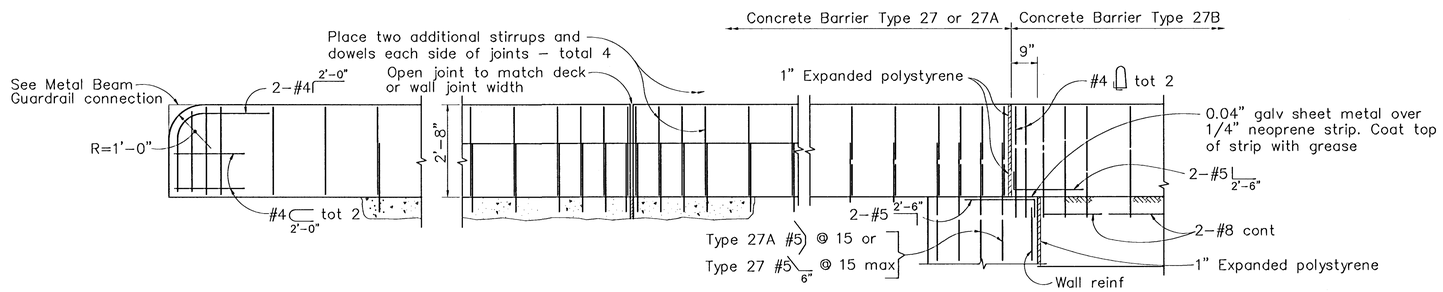

END DETAIL

DECK OR WALL JOINT
See Note B

AT CONNECTION TO STRUCTURE

ELEVATION
1/2" = 1'-0"

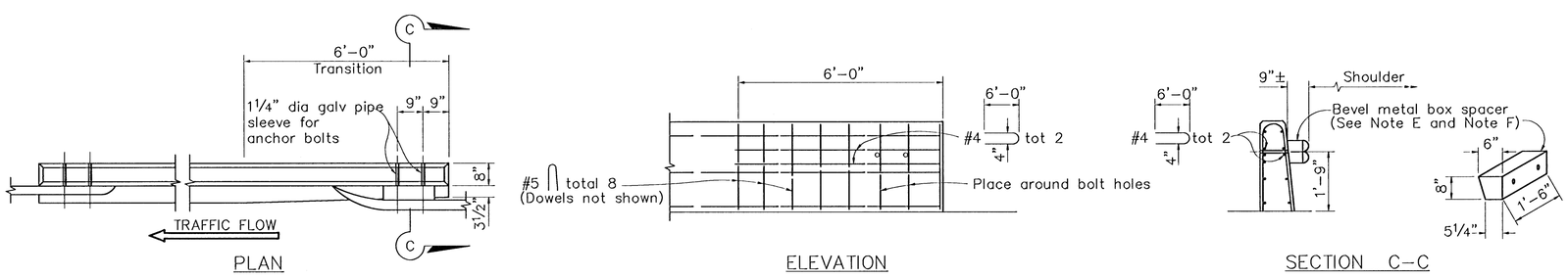

PLAN

ELEVATION

SECTION C–C

METAL BEAM GUARDRAIL CONNECTION
1/2" = 1'-0"

NOTES:

A. Clearance to reinforcing steel in rail to be 1". Longitudinal reinforcement to stop at expansion joints, and be continuous at construction joints. Hairpin stirrups to be rotated to meet clearance.

B. Rail joints shall be located at deck and principal wall joints.

C. Dimension may vary with cross-slope and with certain thickness of surfacing. See Bridge Plans.

D. When glare screen is required, see "Concrete Barrier Type 50".

E. For Metal Beam Guardrail details not shown see 1992 Std Plans A77A thru A77K.

F. For Thrie Beam Barrier details not shown see 1992 Std Plans A78A thru A78F.

G. For details not shown, see Caltrans Standard Plans dated July 1999. (B11-55 / –)

RECORD DRAWINGS
DATE: 6/2/05
BY: BCA (DHN) NO CHANGE

CIP 102-0724
Improvement
Concrete Barrier (as-built)

BRENTWOOD
ENGINEERING DEPARTMENT
708 THIRD STREET, BRENTWOOD, CA 94513

BIGGS CARDOSA ASSOCIATES INC
STRUCTURAL ENGINEERS
1871 The Alameda, Suite 200
San Jose, California 95126
408-296-5515

BCA

CONCRETE BARRIER TYPE 27 — CIP 336-3012

SUNSET ROAD BRIDGE AT MARSH CREEK

BRENTWOOD — CALIFORNIA

NO.	REVISIONS	BY	APP	DATE

DESIGNED UNDER THE DIRECTION OF:
MICHAEL A. THOMAS — DATE 6/3/05
R.C.E. No. 49793 REGISTRATION EXPIRES 9-30-06

DESIGN:	JPG/DHN	DATE:	6/21/02
DRAWN:	ATL	DATE:	6/21/02
CHECKED:	TLS	DATE:	6/21/02

REGISTERED PROFESSIONAL ENGINEER MICHAEL A. THOMAS No. 49793 Exp. 9/30/06 CIVIL STATE OF CALIFORNIA

SHEET S-10 OF 12 SHEETS

2000193S10 2000193

CIP 102-0724

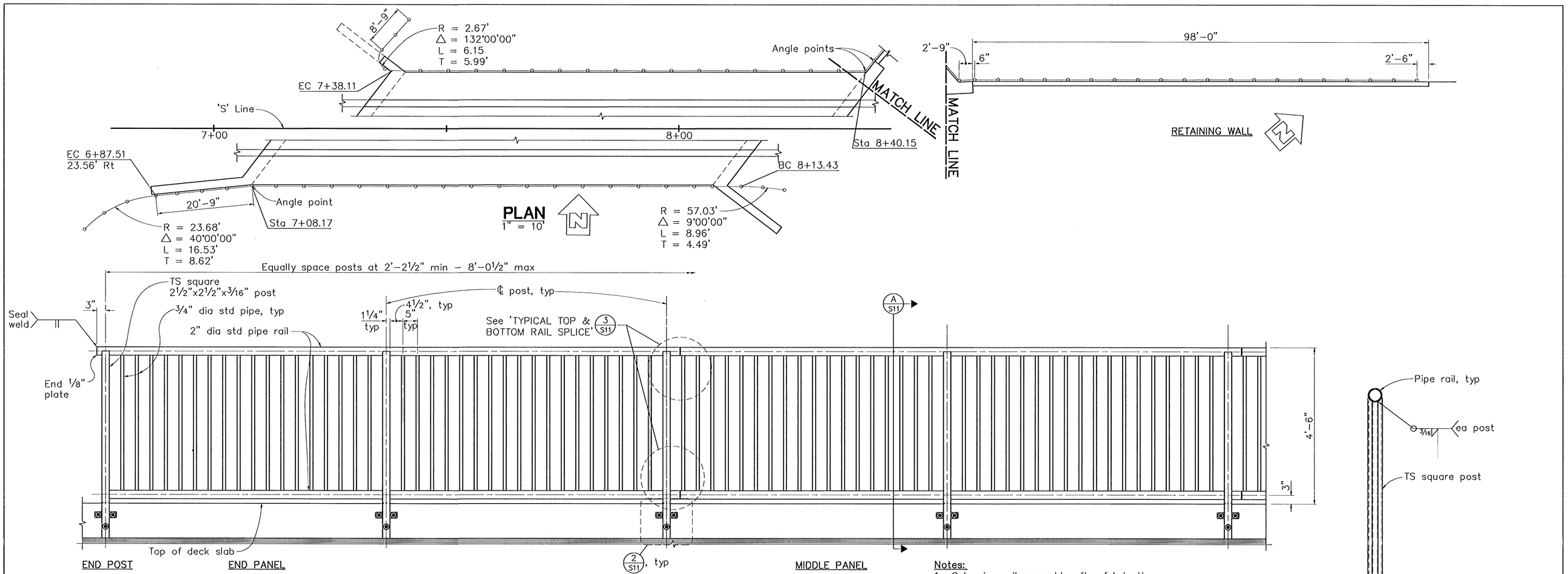

TYPICAL RAILING PANEL
3/4" = 1'-0"

Notes:
1 Galvanize rail assembly after fabrication
2 Pipe rails shall be continuous for not less than two posts
3 Posts shall be normal to rails

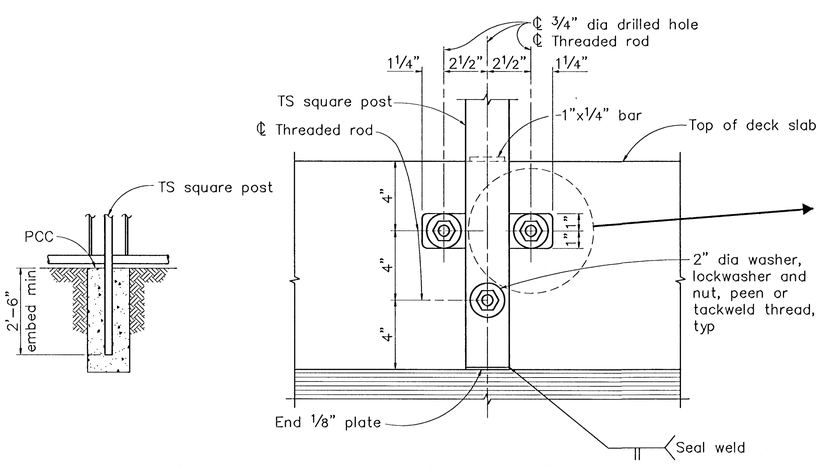

DETAIL 1/S11
1/2" = 1'-0"

DETAIL 2/S11
3" = 1'-0"

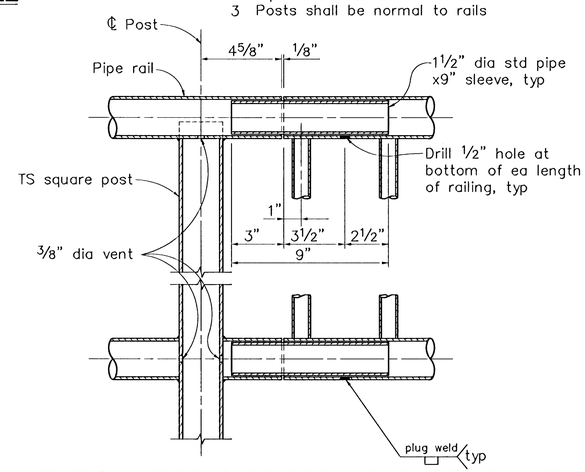

TYPICAL TOP & BOTTOM RAIL SPLICE 3/S11
3" = 1'-0"

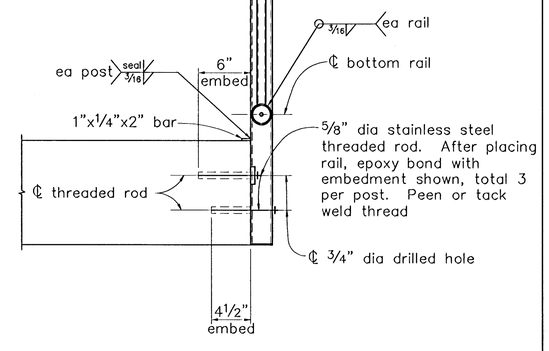

SECTION A/S11
1½" = 1'-0"

RECORD DRAWINGS
DATE: 6/2/05
BY: BCA (DHN) NO CHANGE

CIP 102-0724
Improvement
Handrailing (as-built)

BRENTWOOD
ENGINEERING DEPARTMENT
708 THIRD STREET, BRENTWOOD, CA 94513

BIGGS CARDOSA ASSOCIATES INC
STRUCTURAL ENGINEERS
1871 The Alameda, Suite 200
San Jose, California 95126
408-296-5515

BCA

HANDRAILING DETAILS
CIP 336-3012

SUNSET ROAD BRIDGE AT MARSH CREEK

BRENTWOOD CALIFORNIA

NO.	REVISIONS	BY	APP	DATE

DESIGNED UNDER THE DIRECTION OF:
MICHAEL A. THOMAS 6/2/05 DATE
R.C.E. No. 49793 REGISTRATION EXPIRES 9-30-06

DESIGN:	JPG/DHN	DATE:	6/21/02
DRAWN:	REM	DATE:	6/21/02
CHECKED:	TLS	DATE:	6/21/02

REGISTERED PROFESSIONAL ENGINEER MICHAEL A. THOMAS No. 49793 Exp. 9/30/06 CIVIL STATE OF CALIFORNIA

SHEET S-11 OF 12 SHEETS

(2000193S11) 2000193

CIP 102-0724

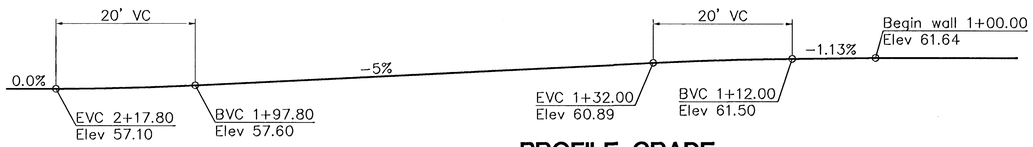

PROFILE GRADE
NO SCALE

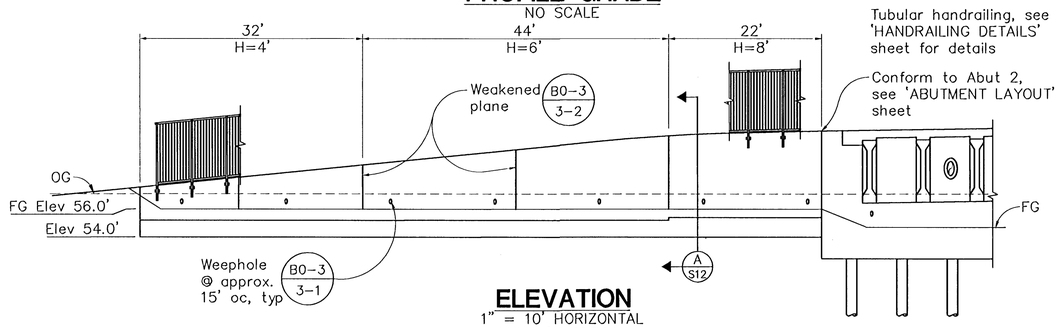

ELEVATION
1" = 10' HORIZONTAL
1' = 5' VERTICAL

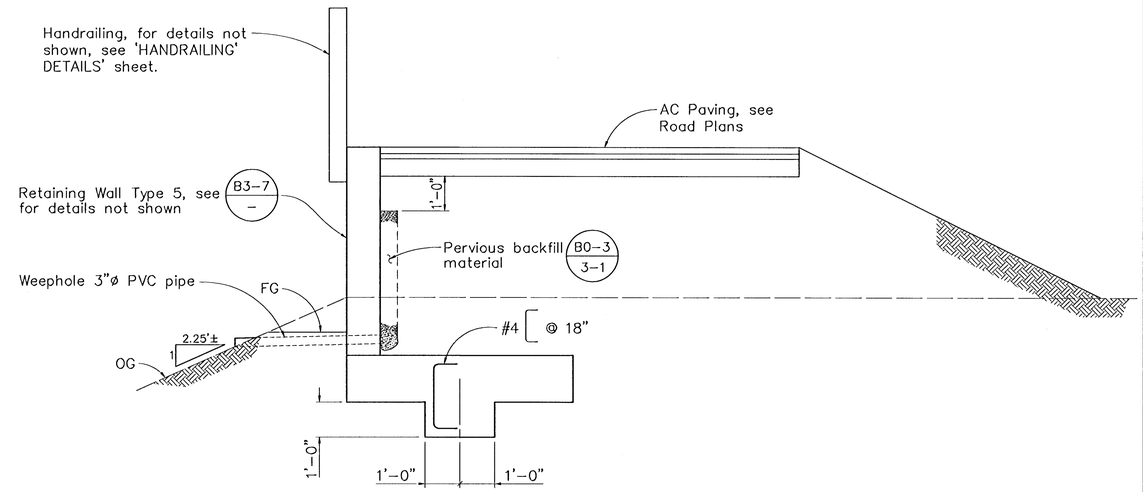

SECTION A/S12
1/2" = 1'-0"

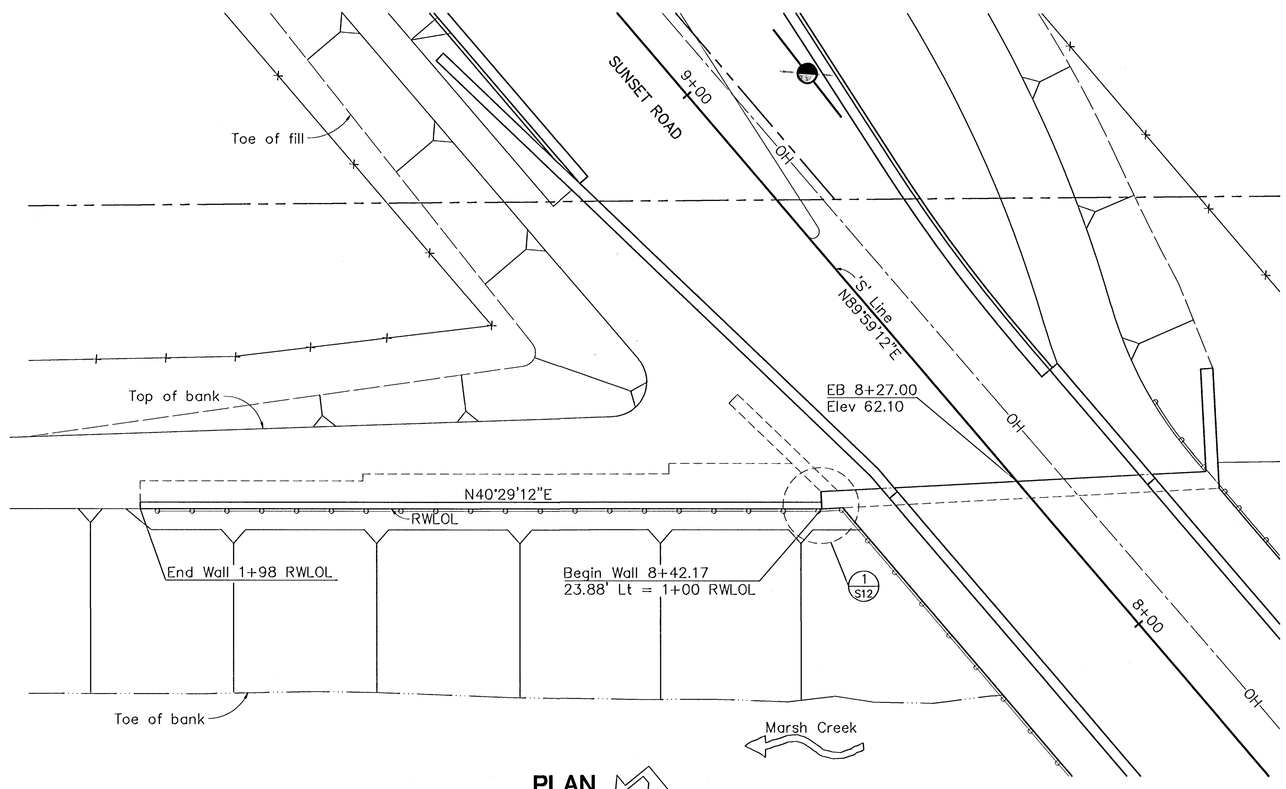

PLAN
1" = 10'

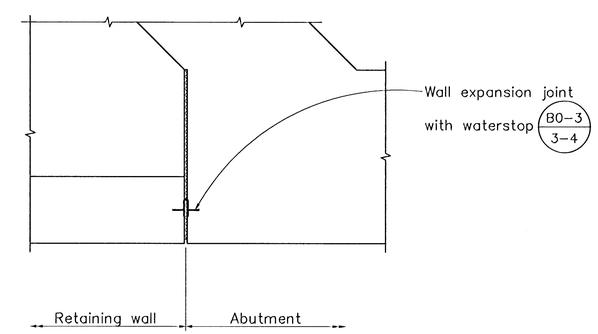

DETAIL 1/S12
1" = 1'-0"

RECORD DRAWINGS
DATE: 6/2/05
BY: BCA (DHN) NO CHANGE

CIP 102-0724
Improvement
Retaining Wall (as-built)

BRENTWOOD
ENGINEERING DEPARTMENT
708 THIRD STREET, BRENTWOOD, CA 94513

BIGGS CARDOSA ASSOCIATES INC
STRUCTURAL ENGINEERS
1871 The Alameda, Suite 200
San Jose, California 95126
408-296-5515

BCA

RETAINING WALL DETAILS
CIP 336-3012

SUNSET ROAD BRIDGE AT MARSH CREEK

BRENTWOOD CALIFORNIA

NO.	REVISIONS	BY	APP	DATE

DESIGNED UNDER THE DIRECTION OF:
MICHAEL A. THOMAS
R.C.E. No. 49793 REGISTRATION EXPIRES 9-30-06
6/3/05 DATE

DESIGN:	JPG/DHN	DATE:	6/21/02
DRAWN:	ATL	DATE:	6/21/02
CHECKED:	TLS	DATE:	6/21/02

REGISTERED PROFESSIONAL ENGINEER MICHAEL A. THOMAS No. 49793 Exp. 9/30/06 CIVIL STATE OF CALIFORNIA

SHEET S-12 OF 12 SHEETS

2000193S12 2000193

CIP 102-0724