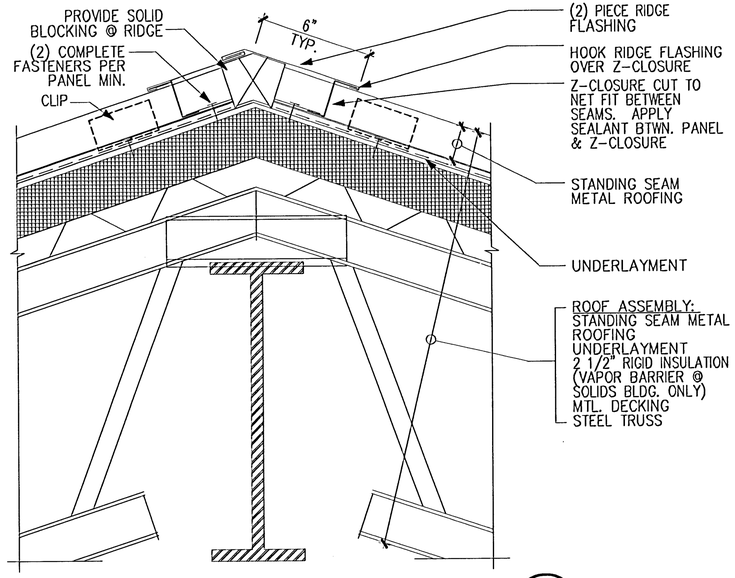

RIDGE DETAIL (1 VAR.)

SCALE 3" : 1' - 0"

SIM. @ CHEMICAL COMPLEX & SOLIDS BLDG.

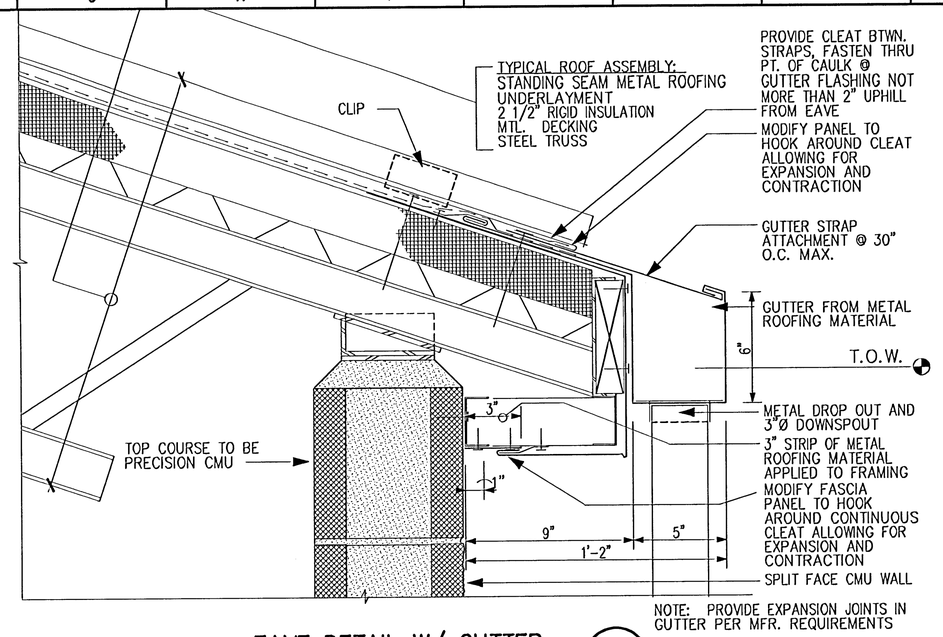

NOTE: PROVIDE EXPANSION JOINTS IN GUTTER PER MFR. REQUIREMENTS

EAVE DETAIL W/ GUTTER (2 VAR.)

SCALE 3" : 1' - 0"

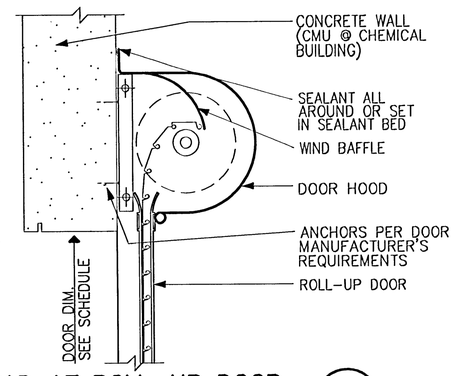

HEAD AT ROLL-UP DOOR (3 VAR.)

SCALE 1 1/2" : 1' - 0"

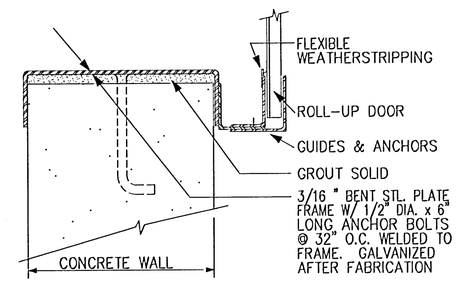

JAMB AT ROLL-UP DOOR (6 VAR.)

SCALE 3" : 1' - 0"

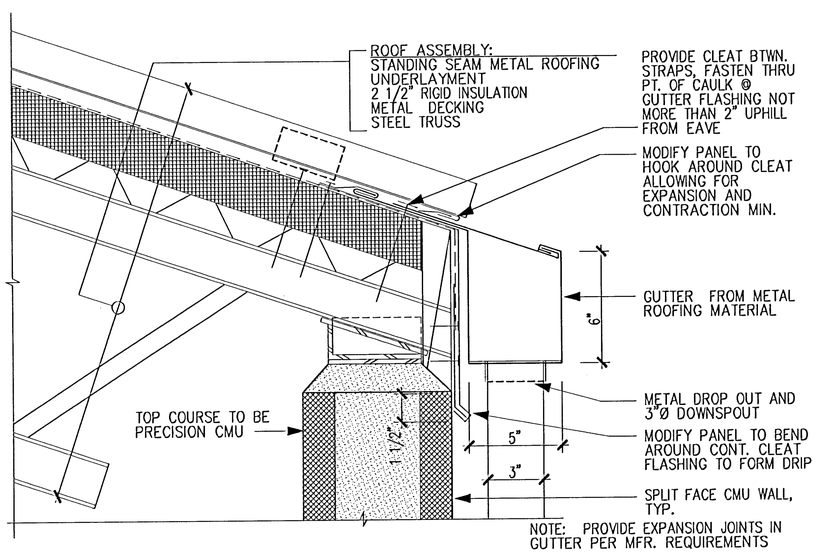

NOTE: PROVIDE EXPANSION JOINTS IN GUTTER PER MFR. REQUIREMENTS

FLUSH EAVE DETAIL (4 VAR.)

SCALE 3" : 1' - 0"

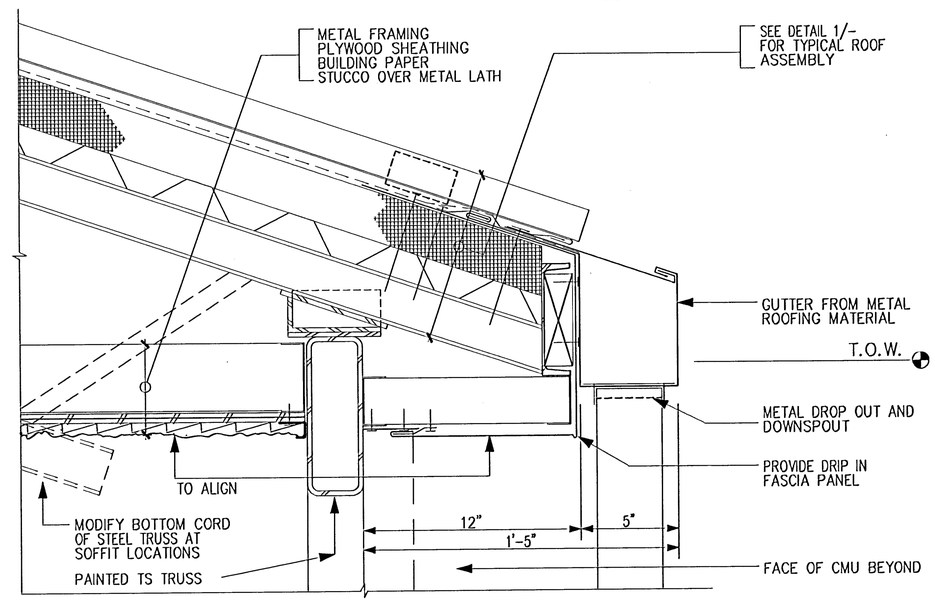

SOFFIT DETAIL (5 VAR.)

SCALE 3" : 1' - 0"

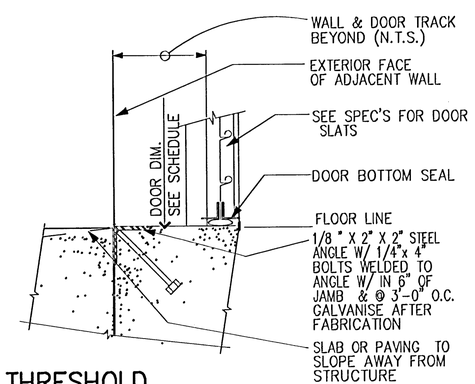

THRESHOLD @ ROLL-UP DOOR (7 VAR.)

SCALE 3" : 1' - 0"

CIP 100-0414
WWTP Expansion Project-
Architectural
Architectural- Operations Building- Roof & Exterior Details 1
7/12/00
HJH
A5

BurksToma Architects

SUBMITTED: Project Manager — DATE: 4/14/2000
APPROVED: CSDA — DATE: 4/14/2000
APPROVED: City of Brentwood — DATE: 4/14/2000

LINE IS 2 INCHES AT FULL SIZE (IF NOT 2"-SCALE ACCORDINGLY)

JOB NO	5702.90
DRAWN	LT
DESIGNED	LT/KB
CHECKED	KB
CHECKED	

G.S. DODSON & ASSOCIATES
CONSULTING ENGINEERS

Registered Professional Engineer — Jennifer Marty Kroeker — No. C043548 — Exp. 6/30/00 — Civil — State of California

Registered Professional Engineer — Karen Burks — No. C12893 — Exp. 10/31/01 — Architect — State of California

REVISIONS

ZONE	REV.	DESCRIPTION	BY	DATE	APP.
		CONFORMED DRAWINGS		7/00	

City of Brentwood

WASTEWATER TREATMENT PLANT EXPANSION PROJECT

ARCHITECTURAL

OPERATIONS BUILDING ROOF & EXTERIOR DETAILS

SCALE: AS NOTED

DRAWING NUMBER: A-5

SHEET NUMBER: 102 of 434

CIP 100-0414

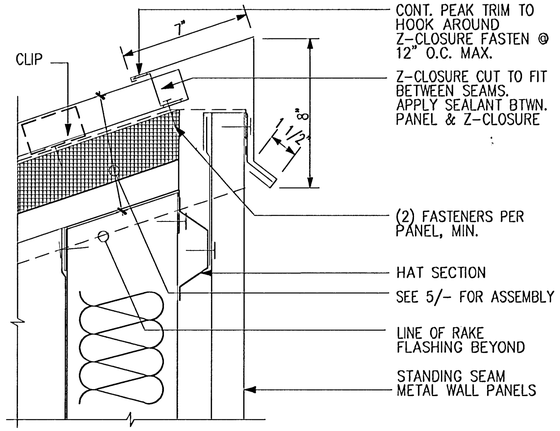

RIDGE DETAIL

SCALE 3":1'-0"

1 / 10-A-01

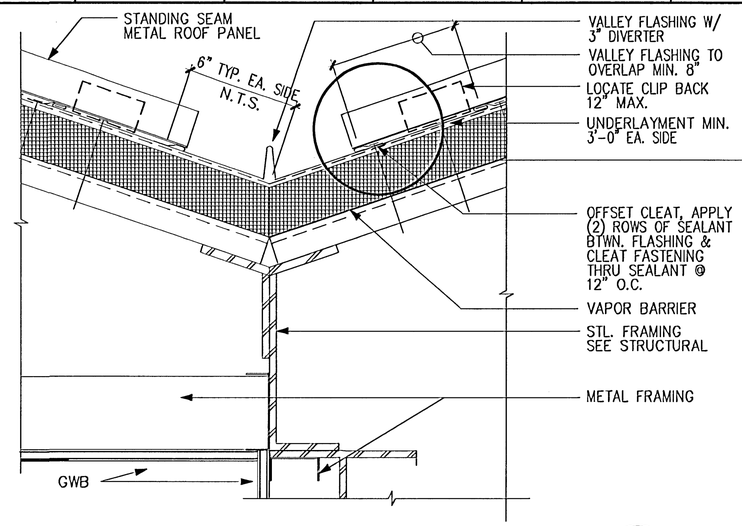

VALLEY DETAIL

SCALE 3":1'-0"

2 / 10-A-01

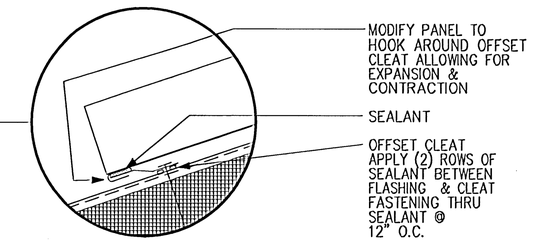

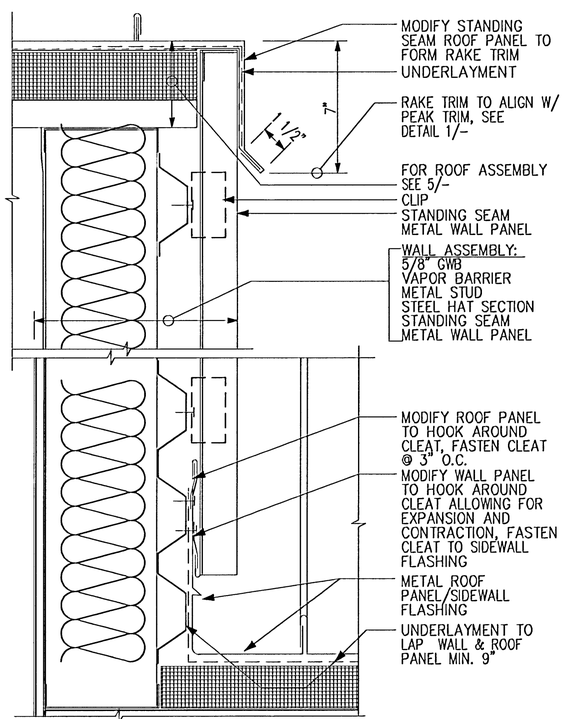

RAKE/SIDEWALL

SCALE 3":1'-0"

3 / 10-A-01

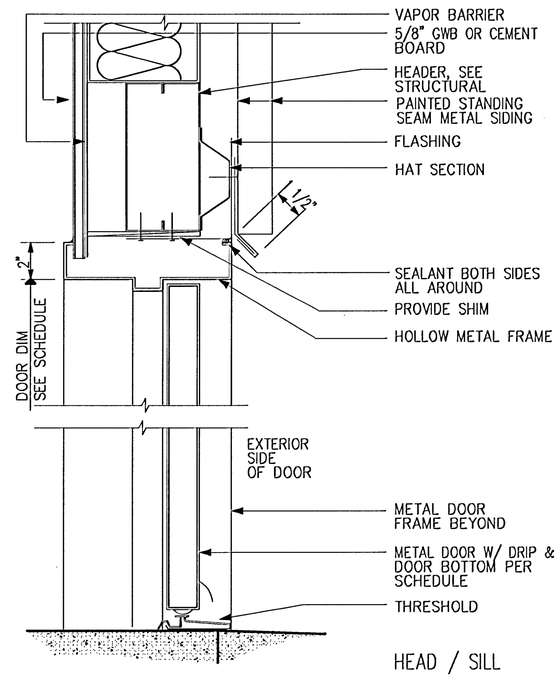

DOOR @ METAL WALL

SCALE 3":1'-0"

JAMB SIM. 10-A-01

4

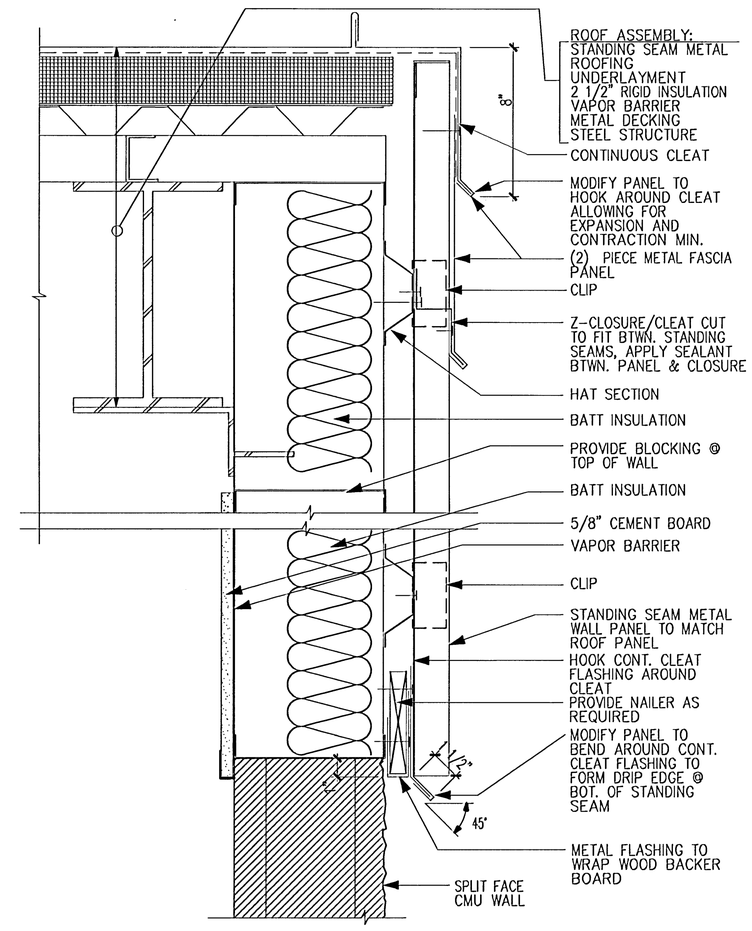

RAKE @ CMU WALL

SCALE 3":1'-0"

5 / 10-A-01

CIP 100-0414
Architectural
WWTP Expansion Project-
Operations Building- Roof
Architectural Details Sheet 2
& Exterior Details
HJH 7/10/00
A6

BurksToma Architects

SUBMITTED: [signature] PROJECT MANAGER DATE: 4/14/2000
APPROVED: [signature] DATE: 4/14/2000
APPROVED: [signature] CSDA CITY OF BRENTWOOD DATE: 4/14/2000

LINE IS 2 INCHES AT FULL SIZE (IF NOT 2"–SCALE ACCORDINGLY)

JOB NO	5702.90
DRAWN	LT
DESIGNED	LT/KB
CHECKED	KB
CHECKED	

G.S. DODSON & ASSOCIATES
CONSULTING ENGINEERS

REGISTERED PROFESSIONAL ENGINEER JENNIFER MARY SEELIG NO. C043548 EXP. 6/30/00 CIVIL STATE OF CALIFORNIA

REGISTERED PROFESSIONAL ENGINEER KAREN BURKS NO. C 12893 EXP. 10/31/01 ARCHITECT STATE OF CALIFORNIA

REVISIONS

ZONE	REV.	DESCRIPTION	BY	DATE	APP.
		CONFORMED DRAWINGS		7/00	

BRENTWOOD

WASTEWATER TREATMENT PLANT EXPANSION PROJECT

ARCHITECTURAL
OPERATIONS BUILDING
ROOF & EXTERIOR DETAILS

SCALE: AS NOTED
DRAWING NUMBER: A-6
SHEET NUMBER: 103 of 434

CIP100-0414

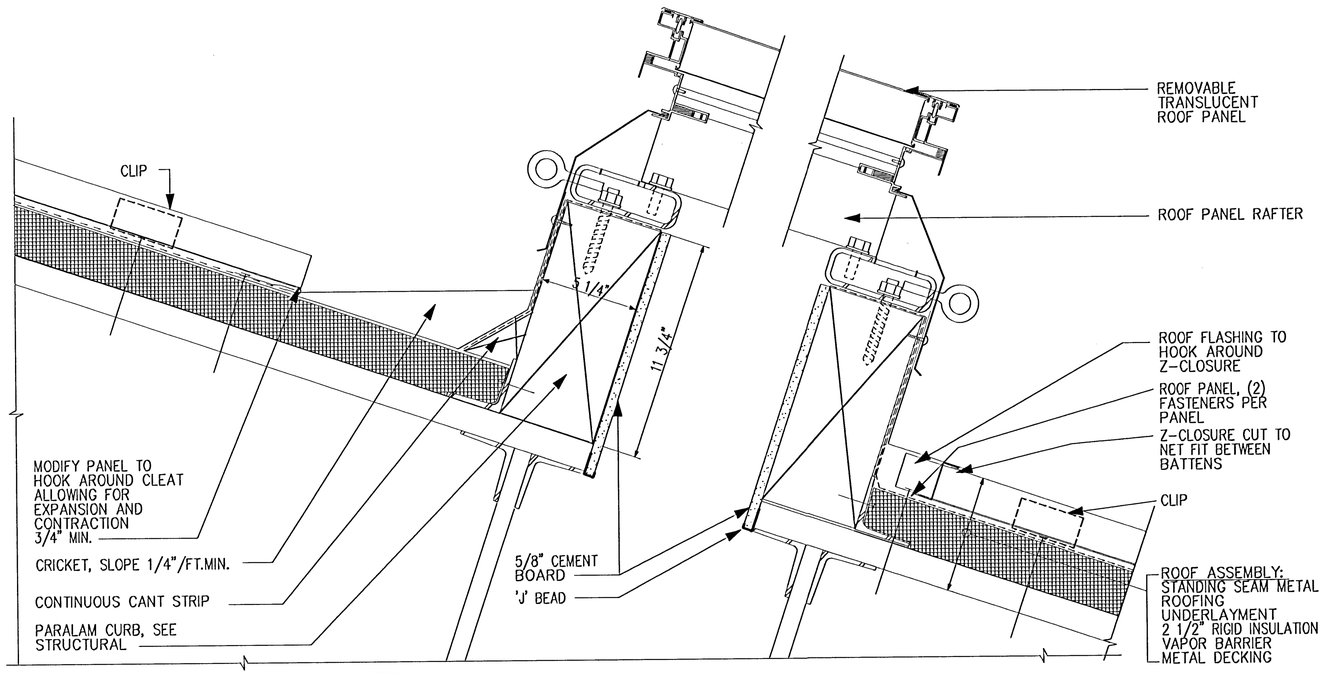

SKYLIGHT DETAIL (1 / 10-A-01)
SCALE 3":1'-0"

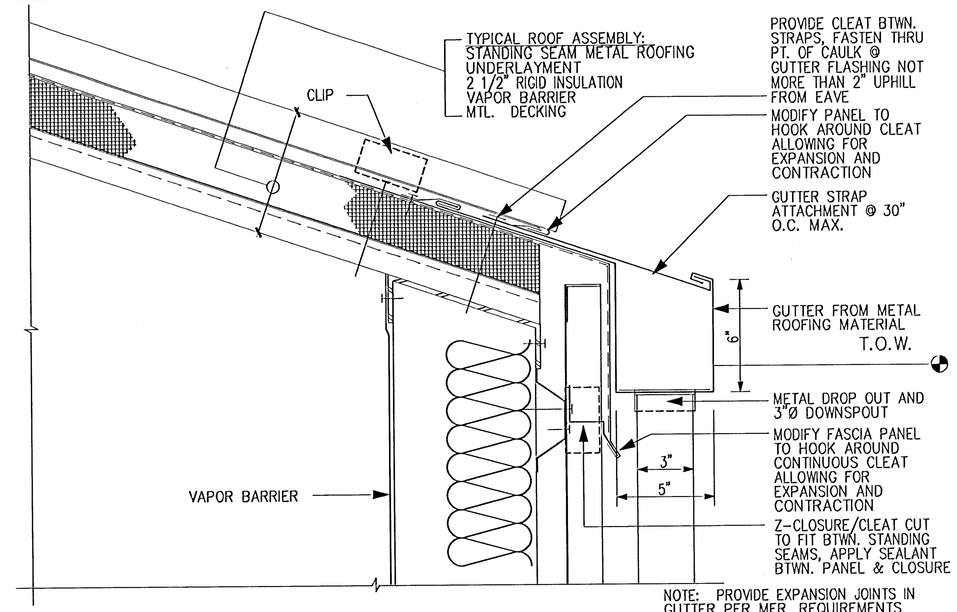

EAVE @ METAL WALL (2 / 10-A-01)
SCALE 3":1'-0"

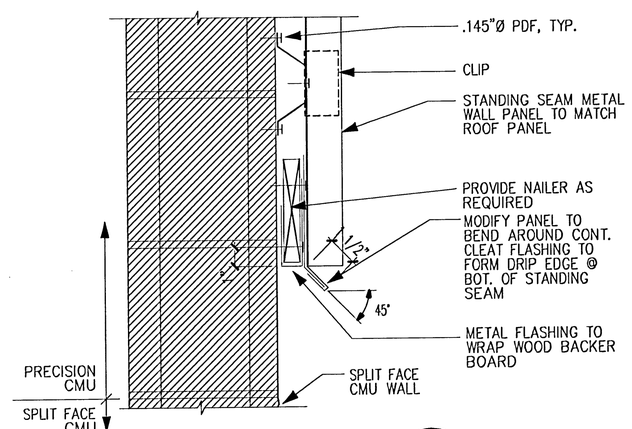

METAL PANEL @ CMU (3 / 40-A-01)
SCALE 3":1'-0"

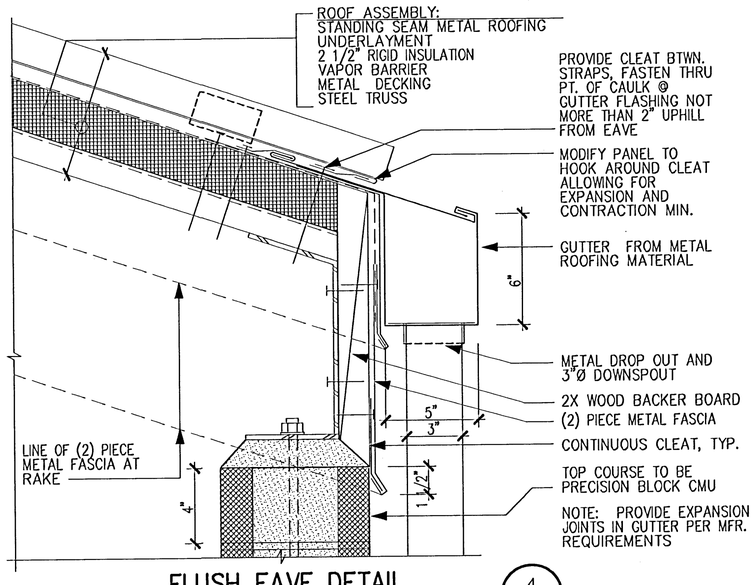

FLUSH EAVE DETAIL (4 / VAR.)
SCALE 3":1'-0"

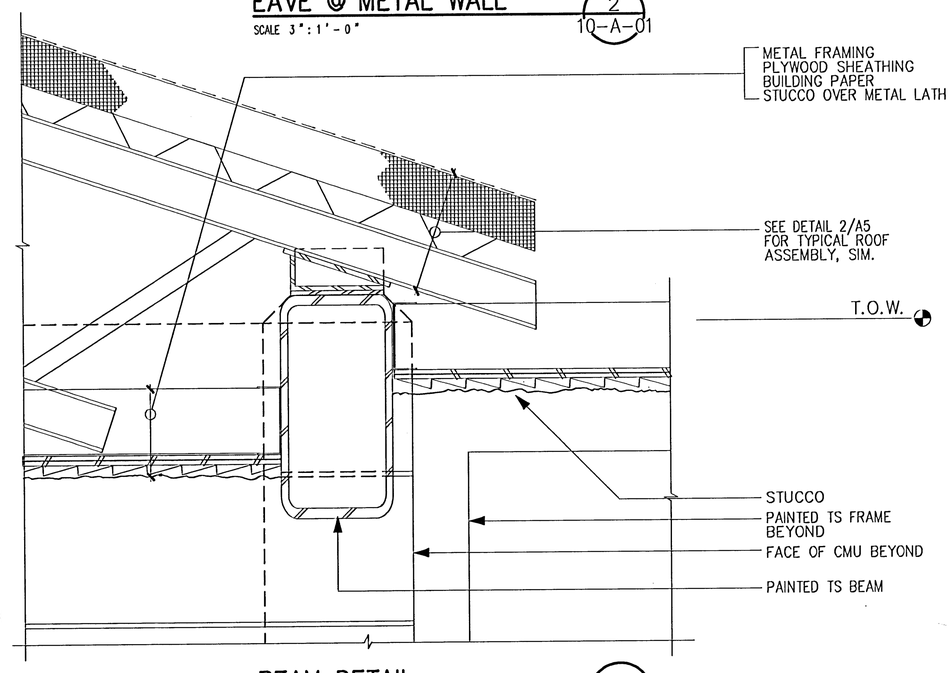

BEAM DETAIL (5 / 80-A-06)
SCALE 3":1'-0"

BurksToma Architects

SUBMITTED: Jennifer Mark — PROJECT MANAGER — DATE: 4/14/2000
APPROVED: Gary L. Dodson — DATE: 4/14/2000
APPROVED: Rick Bunn — CITY OF BRENTWOOD — DATE: 4/14/2000

LINE IS 2 INCHES AT FULL SIZE (IF NOT 2"–SCALE ACCORDINGLY)

JOB NO	5702.90
DRAWN	LT
DESIGNED	LT/KB
CHECKED	KB
CHECKED	

G.S. DODSON & ASSOCIATES — CONSULTING ENGINEERS

REGISTERED PROFESSIONAL ENGINEER — JENNIFER MARY SHEFFIELD — NO. C043548 — EXP. 6/30/00 — CIVIL — STATE OF CALIFORNIA

REGISTERED PROFESSIONAL ENGINEER — KAREN BURKS — NO. C12893 — EXP. 10/31/01 — ARCHITECT — STATE OF CALIFORNIA

REVISIONS

ZONE	REV.	DESCRIPTION	BY	DATE	APP.
		CONFORMED DRAWINGS		7/00	

BRENTWOOD — CITY OF

WASTEWATER TREATMENT PLANT EXPANSION PROJECT

ARCHITECTURAL
OPERATIONS BUILDING
ROOF & EXTERIOR DETAILS

SCALE: AS NOTED
DRAWING NUMBER: A-7
SHEET NUMBER: 104 of 434

CIP 100-0414
Architectural
WWTP Expansion Project-
Architecture- Operations Building- Roof & Exterior Details 8
7/12/00 HJH A7

CIP 100-0414

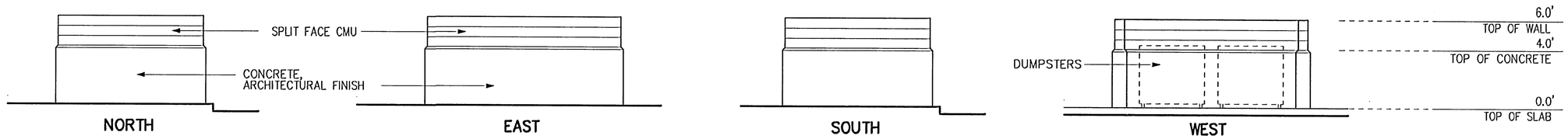

3 SCREEN WALL@ DUMPSTER - ELEVATIONS

SCALE: 1/4" = 1'-0"

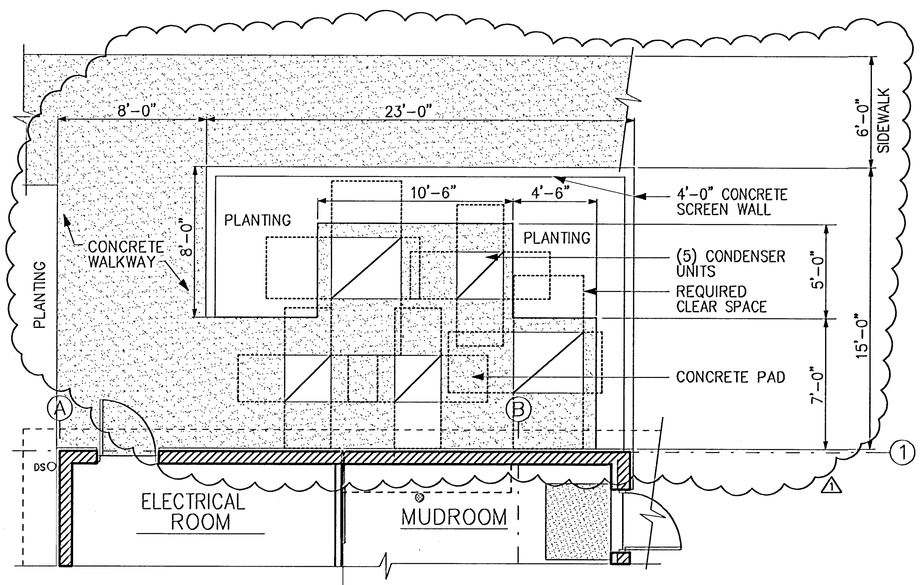

CONDENSER AREA LAYOUT PLAN 2

SCALE: 1/4" = 1'-0"

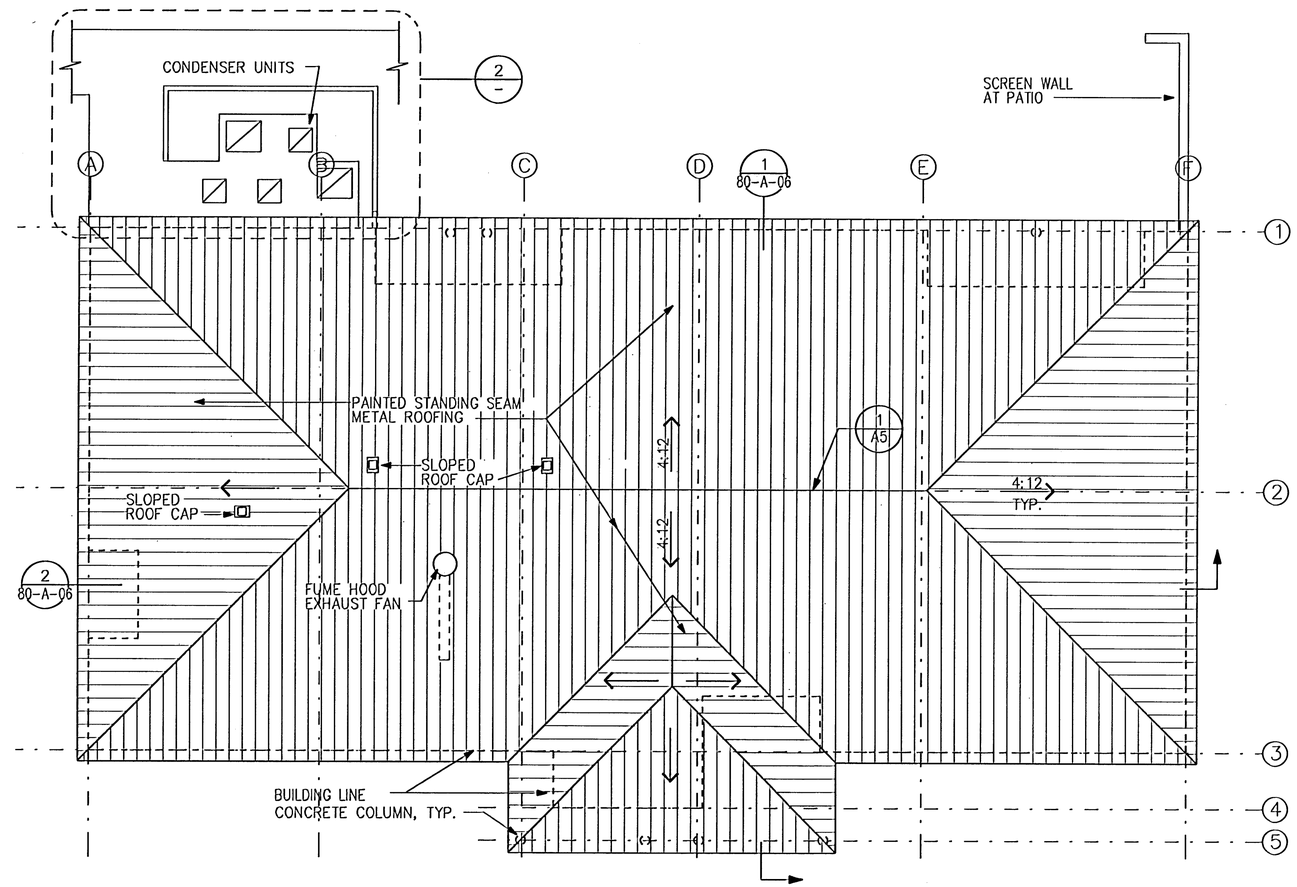

ROOF PLAN 1

SCALE: 1/8" = 1'-0"

CIP 100-0414
Architectural
WWTP Expansion Project
Architectural- Operations Building- Roof Plan & Miscellaneous Structures
80A5 SN 7/13/00 1=1

BurksToma Architects

SUBMITTED: Jennifer McKeel PROJECT MANAGER DATE: 4/14/2000
APPROVED: Jerry L Dodson DATE: 4/14/2000
APPROVED: CSDA CITY OF BRENTWOOD DATE: 4/14/2000

LINE IS 2 INCHES AT FULL SIZE (IF NOT 2"-SCALE ACCORDINGLY)

JOB NO 5702.90
DRAWN LT
DESIGNED LT/KB
CHECKED KB
CHECKED

G.S. DODSON & ASSOCIATES CONSULTING ENGINEERS

REGISTERED PROFESSIONAL ENGINEER JENNIFER MARY SKREL NO. C043548 EXP. 6/30/00 CIVIL STATE OF CALIFORNIA

REGISTERED PROFESSIONAL ENGINEER KAREN BURKS NO. C112893 EXP. 10/31/01 ARCHITECT STATE OF CALIFORNIA

REVISIONS

ZONE	REV.	DESCRIPTION	BY	DATE	APP.
	1	CONDENSER AREA DIMENSIONS	KB	5/22/00	
		CONFORMED DRAWINGS		7/00	

CITY OF BRENTWOOD

WASTEWATER TREATMENT PLANT EXPANSION PROJECT

ARCHITECTURAL
OPERATIONS BUILDING
ROOF PLAN & MISCELLANEOUS STRUCTURES

SCALE AS NOTED
DRAWING NUMBER 80-A-05
SHEET NUMBER 115 of 434

CIP 100-0414

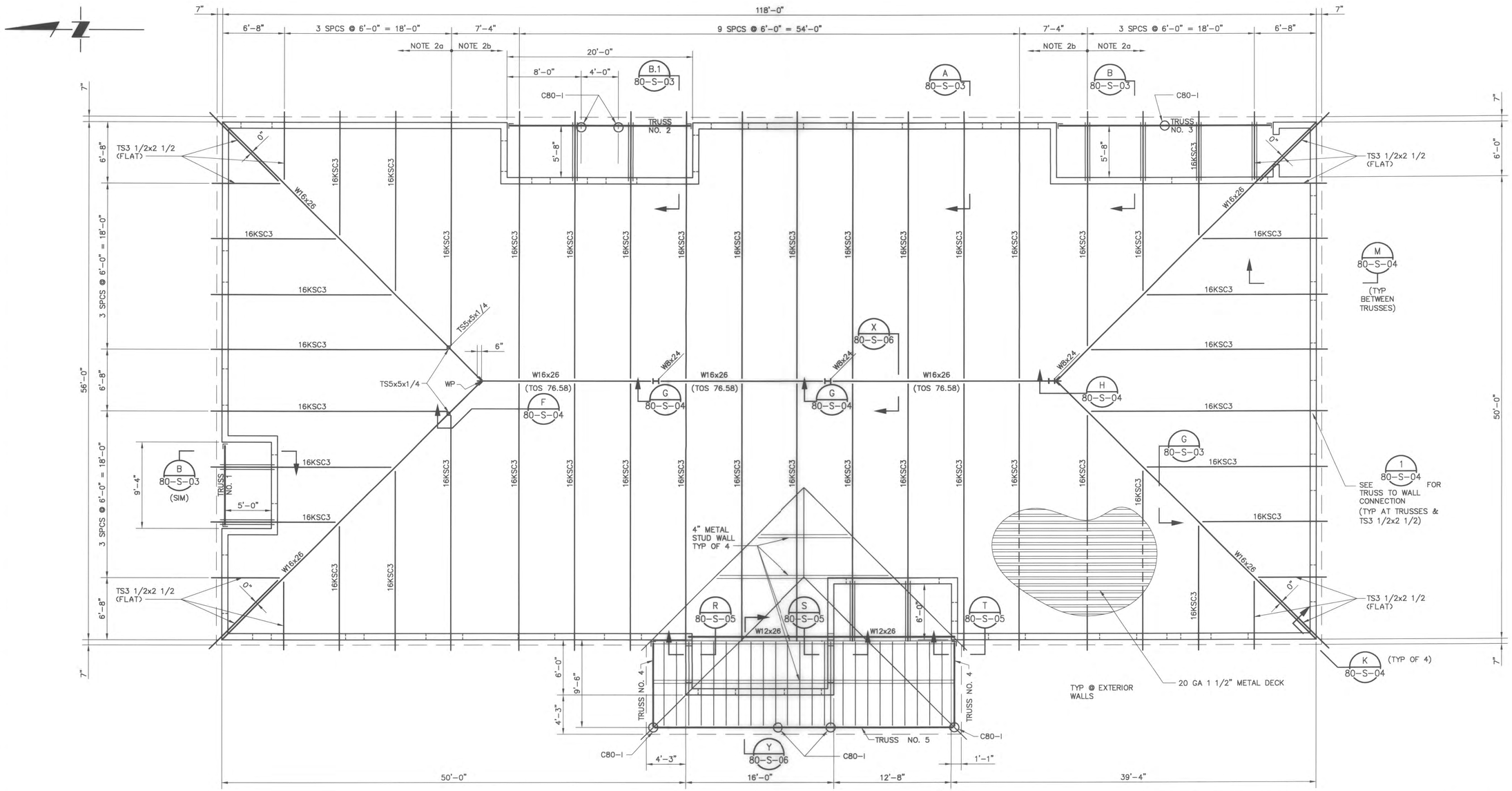

NOTES:

1. FASTEN METAL DECK TO END SUPPORTS W/ 5-1/2"ø PLUG WELDS PER PANEL.
2. FASTEN METAL DECK SIDE LAPS W/ 1 1/2" TOP SEAM WELDS AT:
   a) 12" OC
   b) 24" OC
3. FASTEN METAL DECK TO SIDE SUPPORTS W/ 1/2"ø PLUG WELDS @ 12" OC.
4. CONTRACTOR TO PROVIDE HORIZONTAL BRIDGING, CONFORMING TO SJI STANDARDS @ END PANEL POINTS AND 2 ADDITIONAL EQUALLY SPACED ROWS (4 ROWS TOTAL).
5. ROOF TRUSSES SHALL BE DESIGNED FOR A DEAD LOAD OF 20 PSF AND A LIVE LOAD OF 16 PSF.
6. METAL ROOF DECK SHALL BE CAPABLE OF TRANSFERING 780 PLF OF SHEAR TO END SHEAR WALLS.

RECORD DRAWING

These record drawings have been prepared based on information provided by others. The Engineer has not verified the accuracy of such information and shall not be responsible for any errors or omissions which may be incorporated herein as a result. SEE ORIGINAL CONTRACT DRAWING FOR SEAL AND SIGNATURES.

ADMINISTRATION BUILDING

ROOF PLAN

SCALE: 3/16" = 1'-0"

TJC AND ASSOCIATES, INC.
STRUCTURAL ENGINEERING

SUBMITTED: _____ DATE: 4/14/2000 (PROJECT MANAGER)
APPROVED: _____ DATE: 4/14/2000 (GSDA)
APPROVED: _____ DATE: 4/14/2000 (CITY OF BRENTWOOD)

LINE IS 2 INCHES AT FULL SIZE (IF NOT 2"-SCALE ACCORDINGLY)

JOB NO 5702.34
DRAWN TCS
DESIGNED TJC
CHECKED RKT
CHECKED

G.S. DODSON & ASSOCIATES
CONSULTING ENGINEERS

REVISIONS

ZONE	REV.	DESCRIPTION	BY	DATE	APP.
		RECORD DRAWING		7/05	

CITY OF BRENTWOOD

WASTEWATER TREATMENT PLANT EXPANSION PROJECT

STRUCTURAL
OPERATIONS BUILDING
ROOF PLAN

SCALE 3/16"=1'-0"
DRAWING NUMBER 80-S-02
SHEET NUMBER 218 of 434

CIP 100-0414

X:\TJCAA - 1999 Projects\19906\As-Builts\STR\ 5702-80-s02 07/27/05 15:48 andria XREFS: 5702-SHT, X80PL000
5702- 1=1